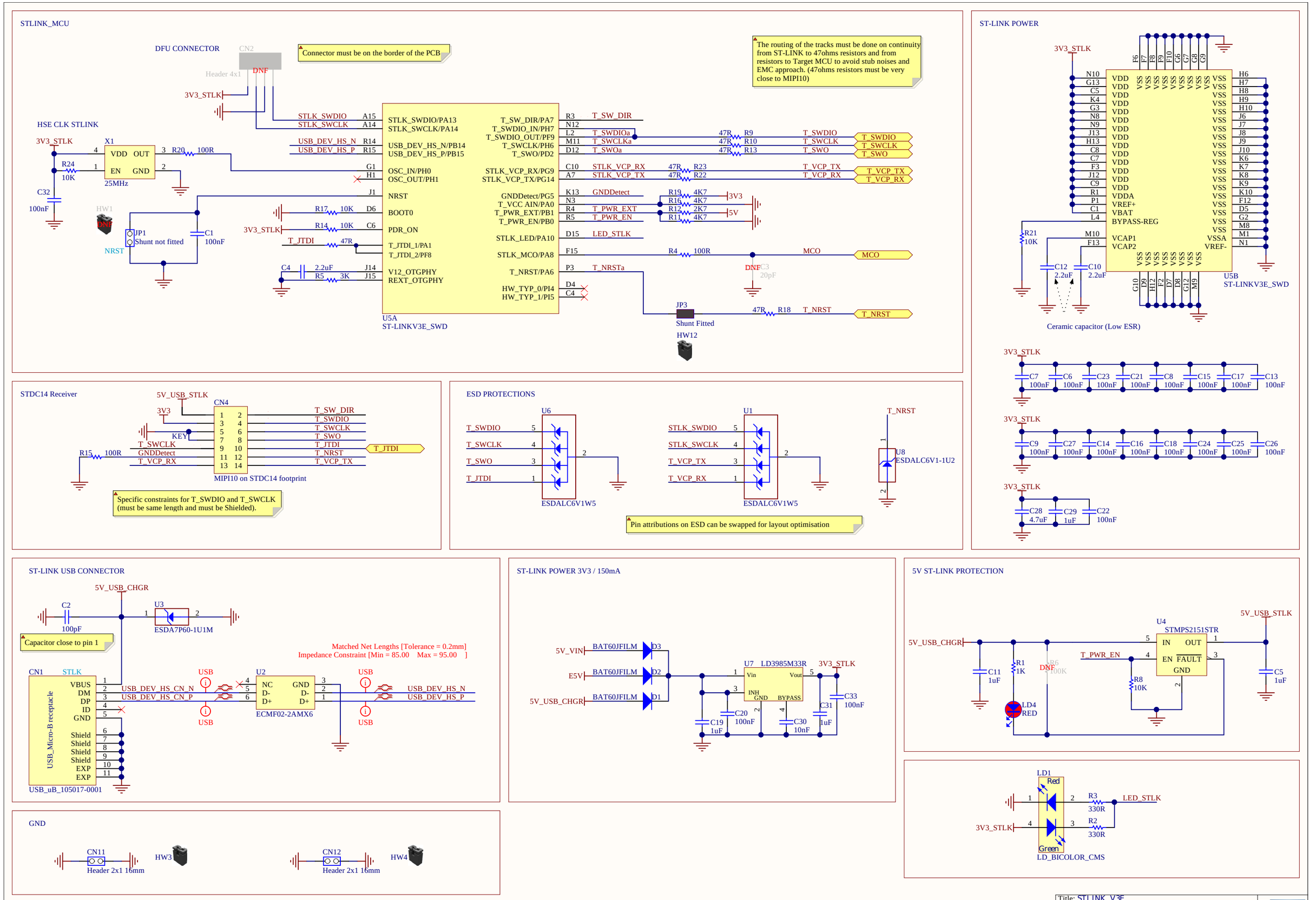

Title: STLINK_V3E		
Project: NUCLEO64 STM32G4		
Variant: G431RB		
Revision: C-04		Reference: MB1367
Size: A3	Date: 21-January-19	Sheet: 7 of 8

life.augmentec