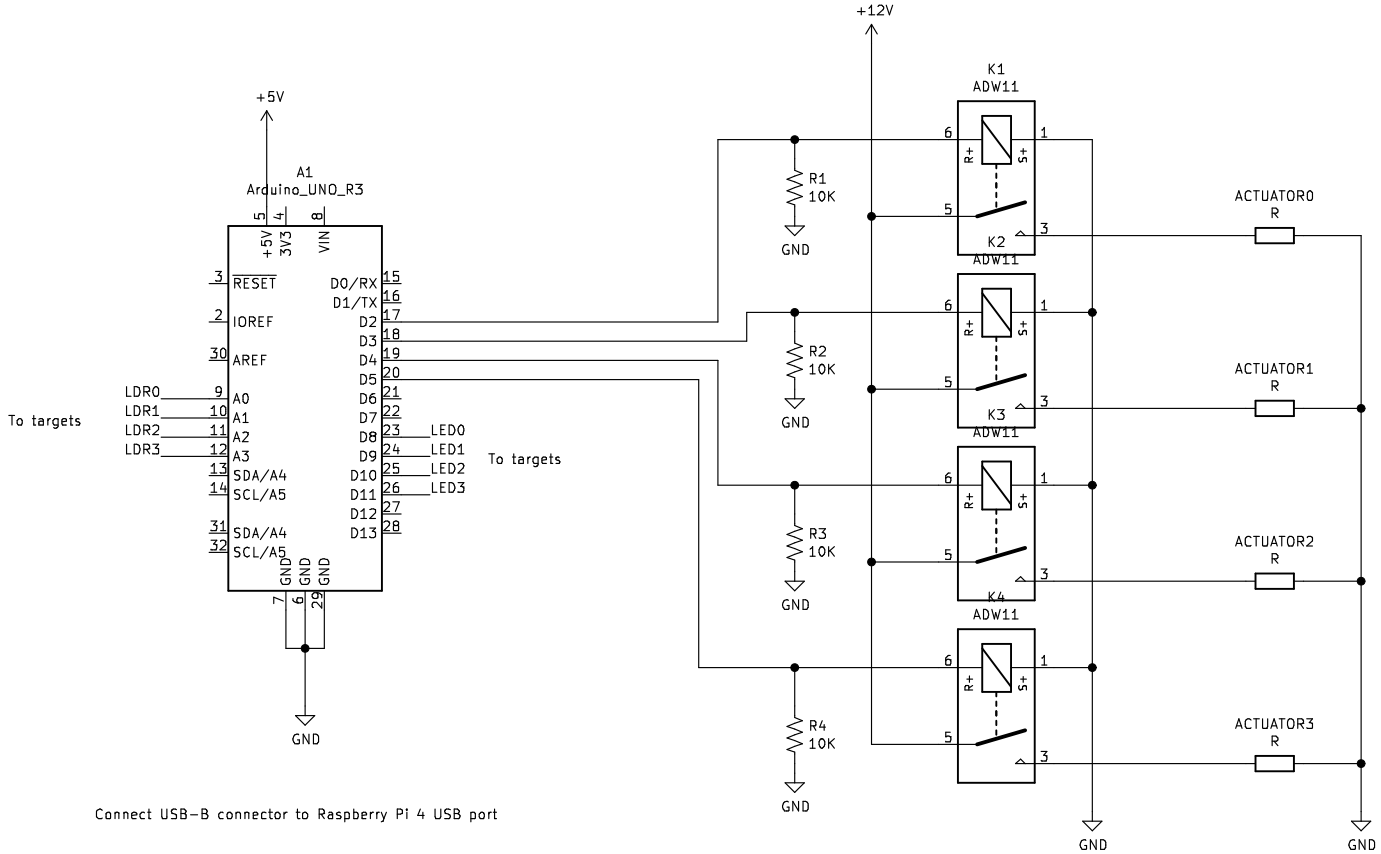

Connect USB-B connector to Raspberry Pi 4 USB port

Sheet: /
File: system.sch

Title: ELFS System

Size: USLetter	Date:	Rev:
KiCad E.D.A. eeschema 5.1.6-c6e7f7d86ubuntu18.04.1		Id: 1/1