US 20220352807A1

(19) United States

(12) Patent Application Publication

(10) Pub. No.: US 2022/0352807 A1

(43) Pub. Date: Nov. 3, 2022

Kim et al.

(54) **VOLTAGE GENERATING CIRCUITS INCLUDING ASSIST CIRCUITS AND OPERATING METHODS THEREOF**

(71) Applicant: **Samsung Electronics Co., Ltd.**, Suwon-si (KR)

(72) Inventors: **Gyuseong Kim**, Suwon-si (KR); **Hyun-Jin Shin**, Hwaseong-si (KR); **Sanggyeong Won**, Suwon-si (KR)

(21) Appl. No.: **17/560,512**

(22) Filed: **Dec. 23, 2021**

(30) **Foreign Application Priority Data**

Apr. 28, 2021 (KR) ..... 10-2021-0055279

**Publication Classification**

(51) **Int. Cl.**

| | |
|---|---|
| ***H02M 1/00*** | (2006.01) |
| ***H02M 3/07*** | (2006.01) |
| ***G11C 5/14*** | (2006.01) |

(52) **U.S. Cl.**

CPC ..... ***H02M 1/0045*** (2021.05); ***H02M 3/07*** (2013.01); ***G11C 5/145*** (2013.01)

(57) **ABSTRACT**
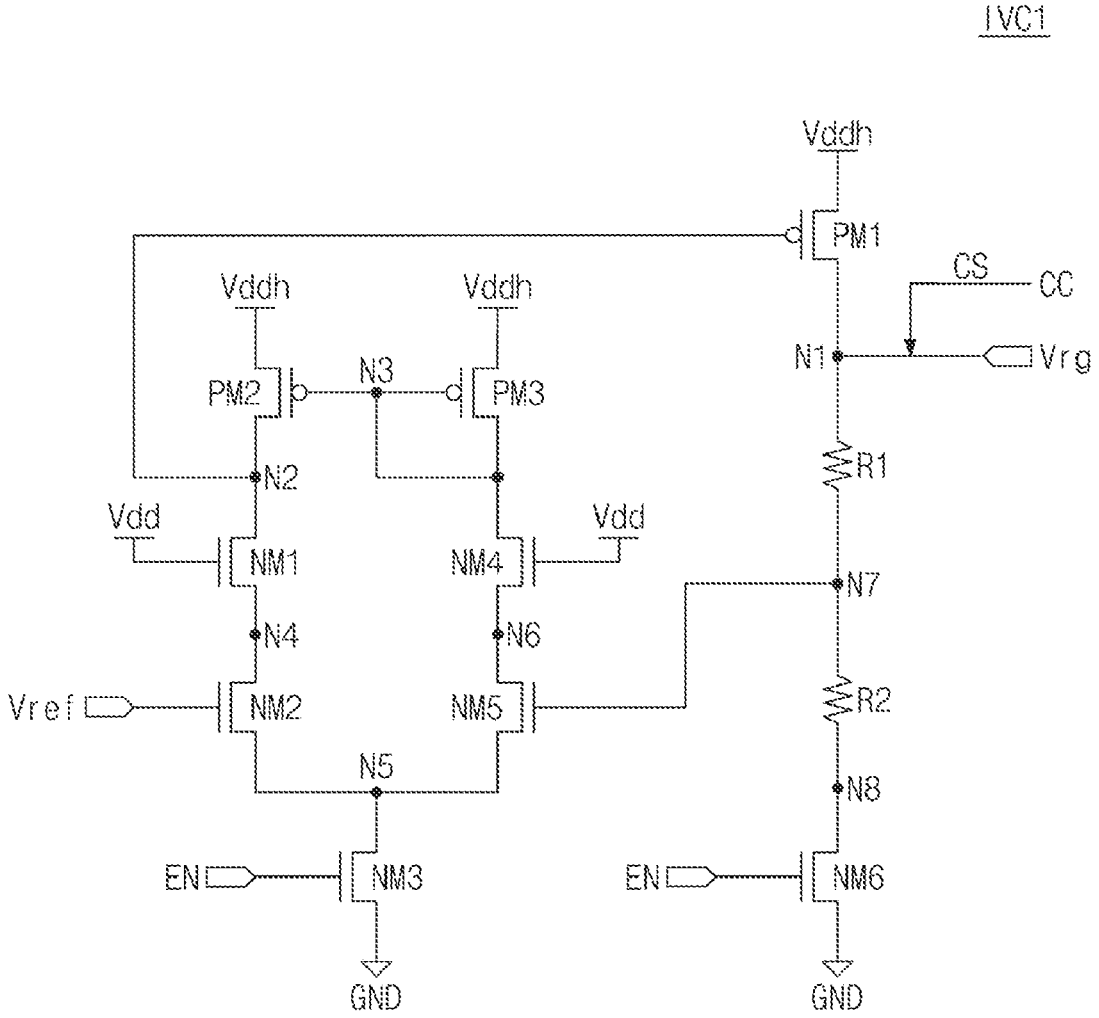
Provided a voltage generating circuits including assist circuits and operating methods thereof. The voltage generating circuit which includes an assist circuit that generates an assist signal indicating an enable mode or a disable mode. When a first power supply voltage is lower than an assist reference voltage, the assist signal indicates the enable mode, and a compensation circuit generates a compensation signal based on the first power supply voltage. An internal voltage converter generates a regulated voltage based on the first power supply voltage, and a charge pump circuit generates a pump voltage based on the regulated voltage. The compensation signal compensates for the regulated voltage.