US 20230231243A1

(19) United States
(12) Patent Application Publication
Kim et al.
(10) Pub. No.: US 2023/0231243 A1
(43) Pub. Date: Jul. 20, 2023

(54) **SECONDARY BATTERY**

(71) Applicant: **LG Energy Solution, Ltd.**, Seoul (KR)

(72) Inventors: **Do Gyun Kim**, Daejeon (KR); **Sang Suk Jung**, Daejeon (KR); **Byoung Kook Lee**, Daejeon (KR); **Byoung Gu Lee**, Daejeon (KR); **Chan Bae Kim**, Daejeon (KR)

(73) Assignee: **LG Energy Solution, Ltd.**, Seoul (KR)

(21) Appl. No.: **18/124,327**

(22) Filed: **Mar. 21, 2023**

Related U.S. Application Data

(63) Continuation of application No. 16/970,530, filed on Aug. 17, 2020, filed as application No. PCT/KR2019/002685 on Mar. 7, 2019.

(30) **Foreign Application Priority Data**

Jun. 5, 2018 (KR) 10-2018-0065057

Publication Classification

(51) **Int. Cl.**

H01M 50/474	(2006.01)
H01M 50/107	(2006.01)
H01M 50/581	(2006.01)
H01M 50/342	(2006.01)
H01M 50/191	(2006.01)
H01M 50/167	(2006.01)

(52) **U.S. Cl.**

CPC ***H01M 50/474*** (2021.01); ***H01M 50/107*** (2021.01); ***H01M 50/581*** (2021.01); ***H01M 50/3425*** (2021.01); ***H01M 50/191*** (2021.01); ***H01M 50/167*** (2021.01)

(57) **ABSTRACT**
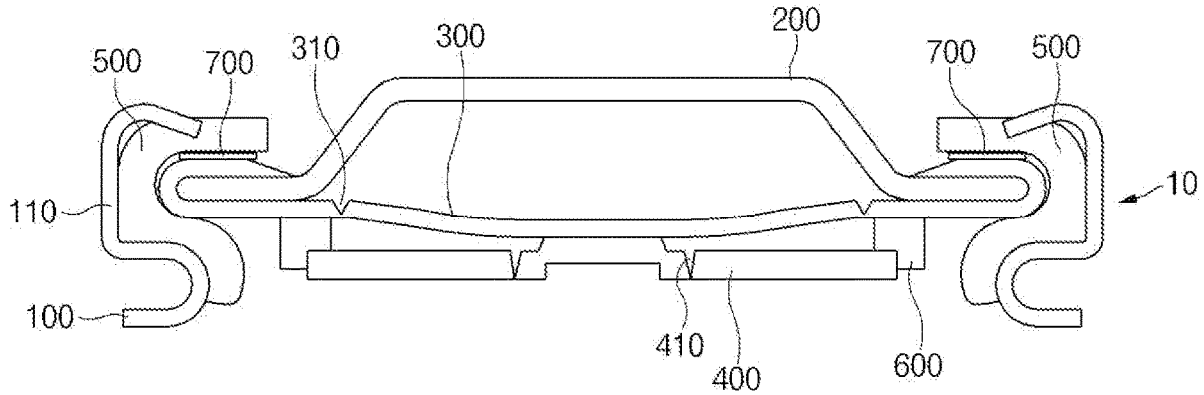
A cylindrical secondary battery may have an insulation layer formed in a region in which the top cap and the first gasket are coupled to each other. The insulation layer may include a ceramic material and a binder. The secondary battery is designed so that, when an external electrical conductive object is electrically connected directly to a positive electrode and a negative electrode of the secondary battery, an electrode tab of the secondary battery is broken as quickly as possible.