US 20230232382A1

(19) United States

(12) Patent Application Publication

(10) Pub. No.: US 2023/0232382 A1

(43) Pub. Date: Jul. 20, 2023

Srinivasan et al.

(54) **PROCEDURES FOR CORESET SHARING**

(71) Applicant: **Fraunhofer-Gesellschaft zur Foerderung der angewandten Forschung e.V.**, Munich (DE)

(72) Inventors: **Nithin Srinivasan**, Berlin (DE); **Baris Göktepe**, Berlin (DE); **Jasmina McMenamy**, Berlin (DE); **Sarun Selvanesan**, Berlin (DE); **Thomas Fehrenbach**, Berlin (DE); **Thomas Wirth**, Berlin (DE); **Thomas Schierl**, Berlin (DE); **Cornelius Hellge**, Berlin (DE)

(21) Appl. No.: **18/158,881**

(22) Filed: **Jan. 24, 2023**

Related U.S. Application Data

(63) Continuation of application No. PCT/EP2021/071565, filed on Aug. 2, 2021.

(30) **Foreign Application Priority Data**

Aug. 3, 2020 (EP) 20189227.0

Publication Classification

(51) **Int. Cl.**

H04W 72/0446	(2006.01)
H04W 72/0457	(2006.01)
H04W 72/0453	(2006.01)
H04W 72/23	(2006.01)

(52) **U.S. Cl.**

CPC ... ***H04W 72/0446*** (2013.01); ***H04W 72/0457*** (2023.01); ***H04W 72/0453*** (2013.01); ***H04W 72/23*** (2023.01)

(57) **ABSTRACT**
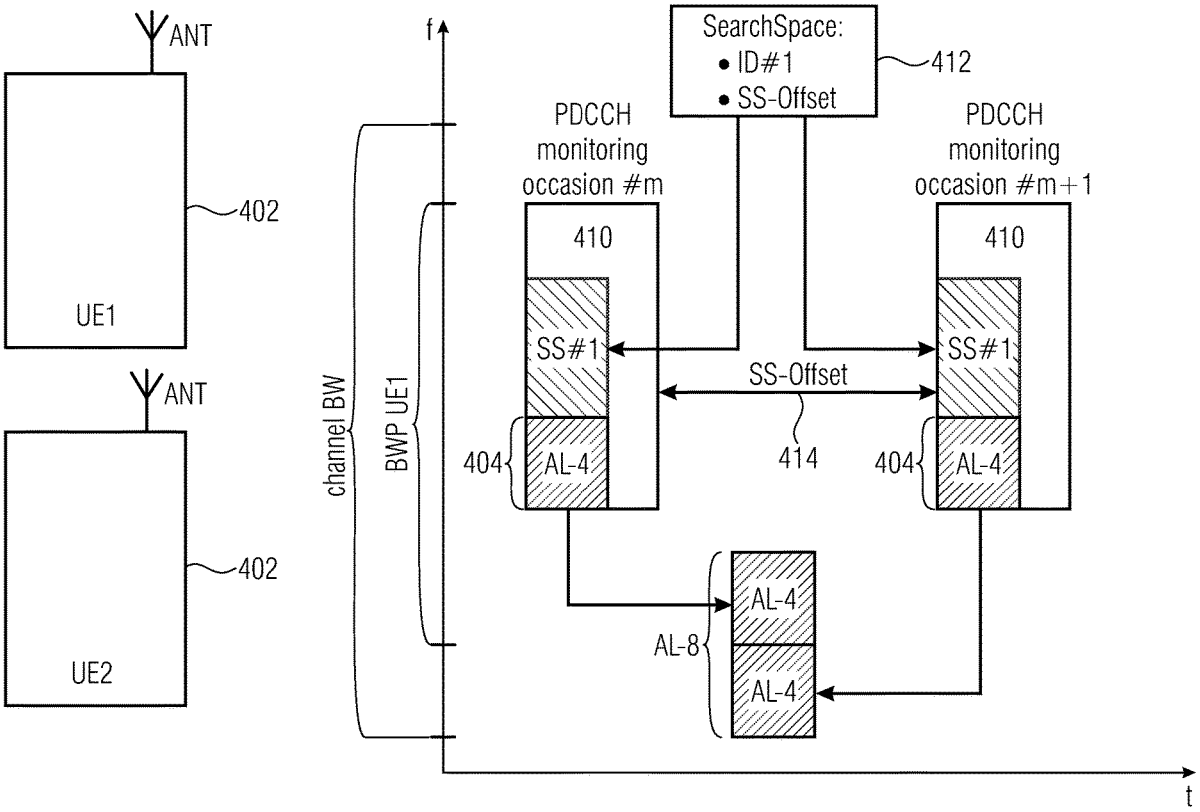
A wireless communication network, has one or more first user devices, UEs, and one or more second user devices, UEs. The wireless communication network is to configure the first UE with one or more bandwidth parts, BWPs, and with a set of control resource sets, CORESETs, within the BWP in the same slot, and the wireless communication network is to configure the second UE with only a subset from the set of CORESETs.