US 20240214132A1

(19) United States

(12) Patent Application Publication

(10) Pub. No.: US 2024/0214132 A1

(43) Pub. Date: Jun. 27, 2024

Amiri et al.

(54) ALTERNATIVE HARQ CONFIGURATION FOR XR UPLINK DATA TRANSMISSION

(71) Applicant: **Nokia Technologies Oy**, Espoo (FI)

(72) Inventors: **Abolfazl Amiri**, Aalborg (DK); **Klaus Ingermann PEDERSEN**, Aalborg (DK); **Zexian LI**, Espoo (FI); **Stefano PARIS**, Vanves (FR)

(21) Appl. No.: **18/545,332**

(22) Filed: **Dec. 19, 2023**

Related U.S. Application Data

(60) Provisional application No. 63/434,958, filed on Dec. 23, 2022.

Publication Classification

(51) **Int. Cl.**
H04L 1/1829 (2006.01)

(52) **U.S. Cl.**
CPC *H04L 1/1854* (2013.01)

(57) **ABSTRACT**
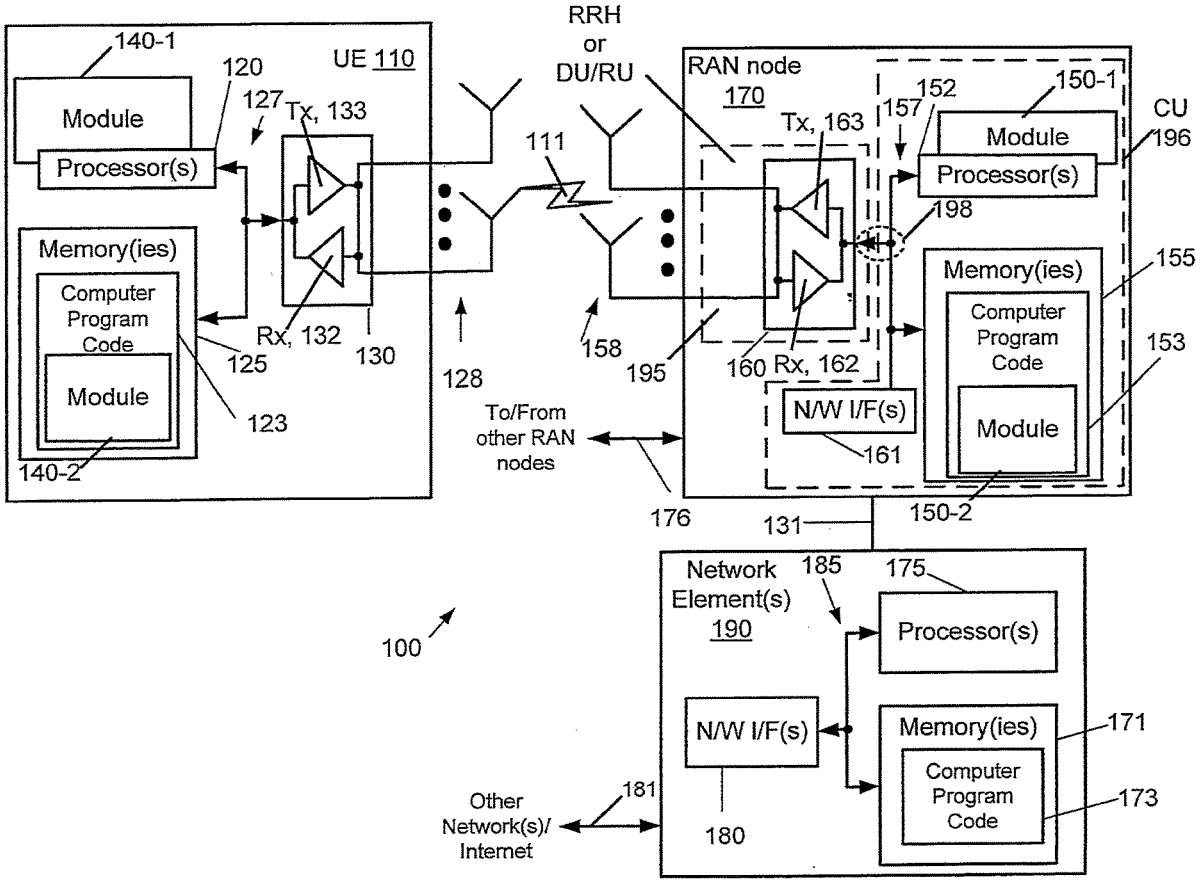
An apparatus configured to: transmit, to a UE, signaling for scheduling retransmission of at least one transport block of a bundle of uplink transmissions, including at least one of: an indication of at least one resource for the retransmission, an indication of whether a duplicate of the at least one transport block, or a redundant version of the at least one transport block is to be retransmitted, an indication of a MCS for the retransmission, an indication of a periodicity for the retransmission, an indication of the at least one transport block to be retransmitted, an indication of a link between the signaling for scheduling the retransmission of the at least one transport block and another scheduling grant, an indication of a hybrid automatic repeat request process to perform, or an indication of a hybrid automatic repeat request process number associated with the at least one transport block.