US 20240178735A1

(19) United States
(12) Patent Application Publication
Zhu et al.
(10) Pub. No.: US 2024/0178735 A1
(43) Pub. Date: May 30, 2024

(54) **MULTI-ROTOR DIRECT DRIVE TRANSMISSION SYSTEM**

(71) Applicant: **AAC Technologies (Nanjing) Co., Ltd.**, Nanjing (CN)

(72) Inventors: **Xueyuan Zhu**, Nanjing (CN); **Shun Guo**, Nanjing (CN); **Weiling Shi**, Nanjing (CN); **Lin Qian**, Nanjing (CN)

(21) Appl. No.: **18/331,117**

(22) Filed: **Jun. 7, 2023**

Related U.S. Application Data

(63) Continuation of application No. PCT/CN2023/071749, filed on Jan. 10, 2023.

(30) **Foreign Application Priority Data**

Nov. 29, 2022 (CN) 202223186564.8

Publication Classification

(51) **Int. Cl.**

H02K 41/02	(2006.01)
H02K 11/21	(2006.01)
H02K 11/30	(2006.01)

(52) **U.S. Cl.**

CPC ***H02K 41/02*** (2013.01); ***H02K 11/21*** (2016.01); ***H02K 11/30*** (2016.01)

(57) **ABSTRACT**
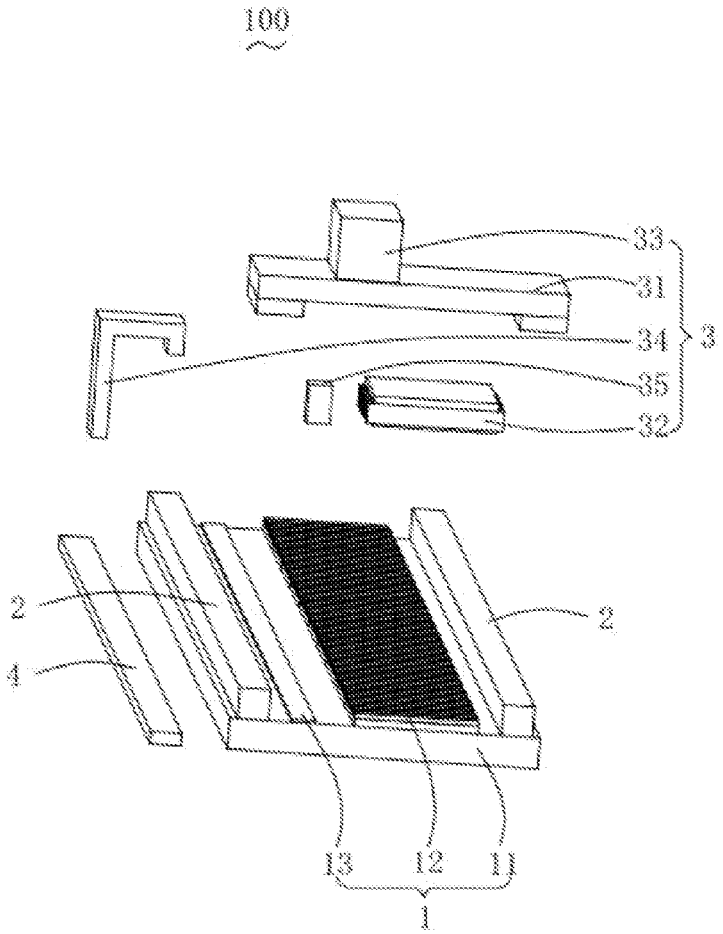
The present disclosure provides a multi-rotor direct drive transmission system, which includes multiple stator units, a guide rail, and multiple rotor units. Each of the multiple stator units includes a stator and a magnetic steel, and the guide rail is attached to the stator. Each of the multiple rotor units includes a rotor, a winding, a drive device, and a power supply unit. The winding is spaced from and arranged directly opposite to the magnetic steel, and the winding is configured to drive the magnetic steel. The drive device is electrically connected to the winding, and the drive device is connected to the control system by wireless communication. The multi-rotor direct drive transmission system further includes a conductive strip. The power supply unit is a movable cable. The multi-rotor direct drive transmission system of the present disclosure is simple in structure, and is easy to control and use.