US 20220376662A1

(19) United States

(12) Patent Application Publication

(10) Pub. No.: US 2022/0376662 A1

(43) Pub. Date: Nov. 24, 2022

Datta et al.

(54) RECONFIGURABLE POWER AMPLIFIERS WITH CONTROLLABLE INPUT CAPACITANCE

(71) Applicant: **Skyworks Solutions, Inc.**, Irvine, CA (US)

(72) Inventors: **Kunal Datta**, Sunnyvale, CA (US); **Jinghang Feng**, San Jose, CA (US); **Srivatsan Jayaraman**, Santa Clara, CA (US)

(21) Appl. No.: **17/663,077**

(22) Filed: **May 12, 2022**

Related U.S. Application Data

(60) Provisional application No. 63/201,953, filed on May 20, 2021, provisional application No. 63/201,955, filed on May 20, 2021.

Publication Classification

(51) **Int. Cl.**
H03F 3/191 (2006.01)
H03F 3/30 (2006.01)

(52) **U.S. Cl.**
CPC ***H03F 3/191*** (2013.01); ***H03F 3/3083*** (2013.01); *H03F 2200/06* (2013.01); *H03F 2200/09* (2013.01); *H03F 2200/111* (2013.01); *H03F 2200/451* (2013.01)

(57) **ABSTRACT**
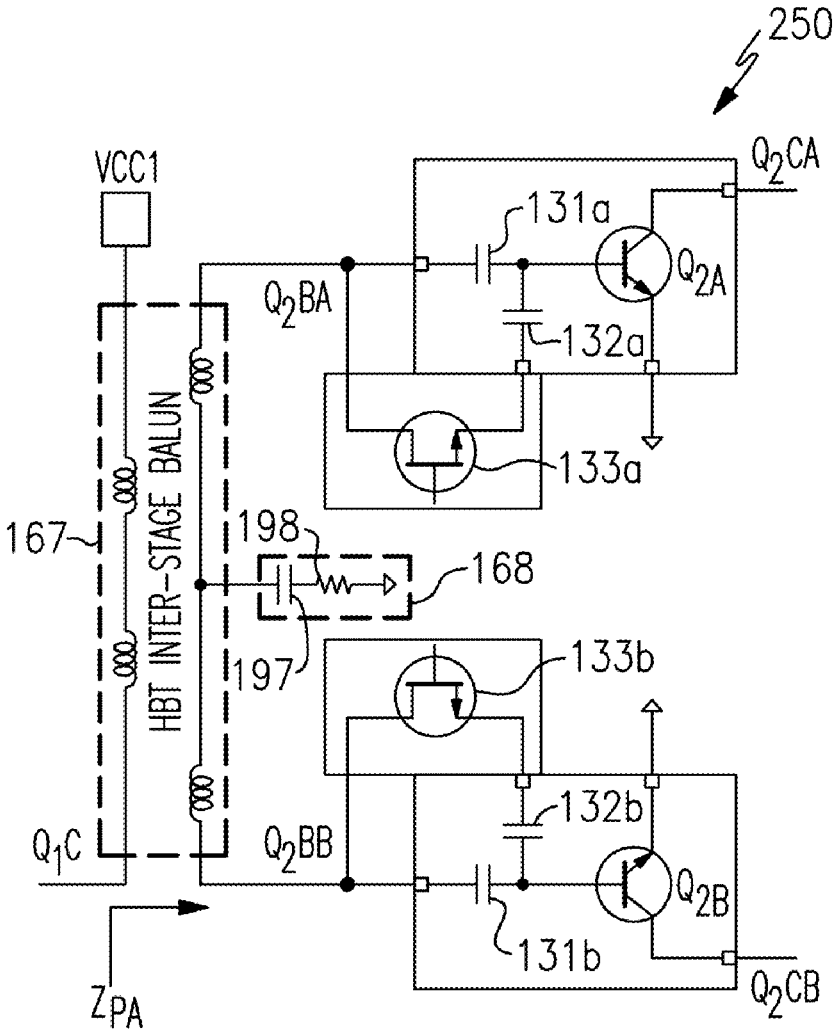
Apparatus and methods for reconfigurable power amplifiers are disclosed. In certain embodiments, a mobile device includes a transceiver configured to generate a first radio frequency signal of a first frequency band and a second radio frequency signal of a second frequency band, and a front-end system including a push-pull power amplifier configured to selectively amplify one of the first radio frequency signal or the second radio frequency signal based on a band control signal. The push-pull power amplifier includes an input balun, an output balun, and a pair of amplifiers coupled between the input balun and the output balun. The band control signal is operable to control an input capacitance of the pair of amplifiers.