US 20240213383A1

(19) United States
(12) Patent Application Publication
ISOMURA et al.
(10) Pub. No.: US 2024/0213383 A1
(43) Pub. Date: Jun. 27, 2024

(54) LIGHT RECEIVING DEVICE

(71) Applicant: **KYOTO SEMICONDUCTOR CO., LTD.**, Tochigi (JP)

(72) Inventors: **Takatomo ISOMURA**, Tochigi (JP); **Etsuji OMURA**, Tochigi (JP)

(73) Assignee: **KYOTO SEMICONDUCTOR CO., LTD.**, Tochigi (JP)

(21) Appl. No.: **18/518,407**

(22) Filed: **Nov. 22, 2023**

Related U.S. Application Data

(63) Continuation of application No. PCT/JP2022/048201, filed on Dec. 27, 2022.

Publication Classification

(51) **Int. Cl.**
H01L 31/0232 (2006.01)
H01L 31/028 (2006.01)
H01L 31/0304 (2006.01)
H01L 31/0328 (2006.01)

(52) **U.S. Cl.**
CPC ***H01L 31/02327*** (2013.01); ***H01L 31/028*** (2013.01); ***H01L 31/0304*** (2013.01); ***H01L 31/0328*** (2013.01)

(57) **ABSTRACT**
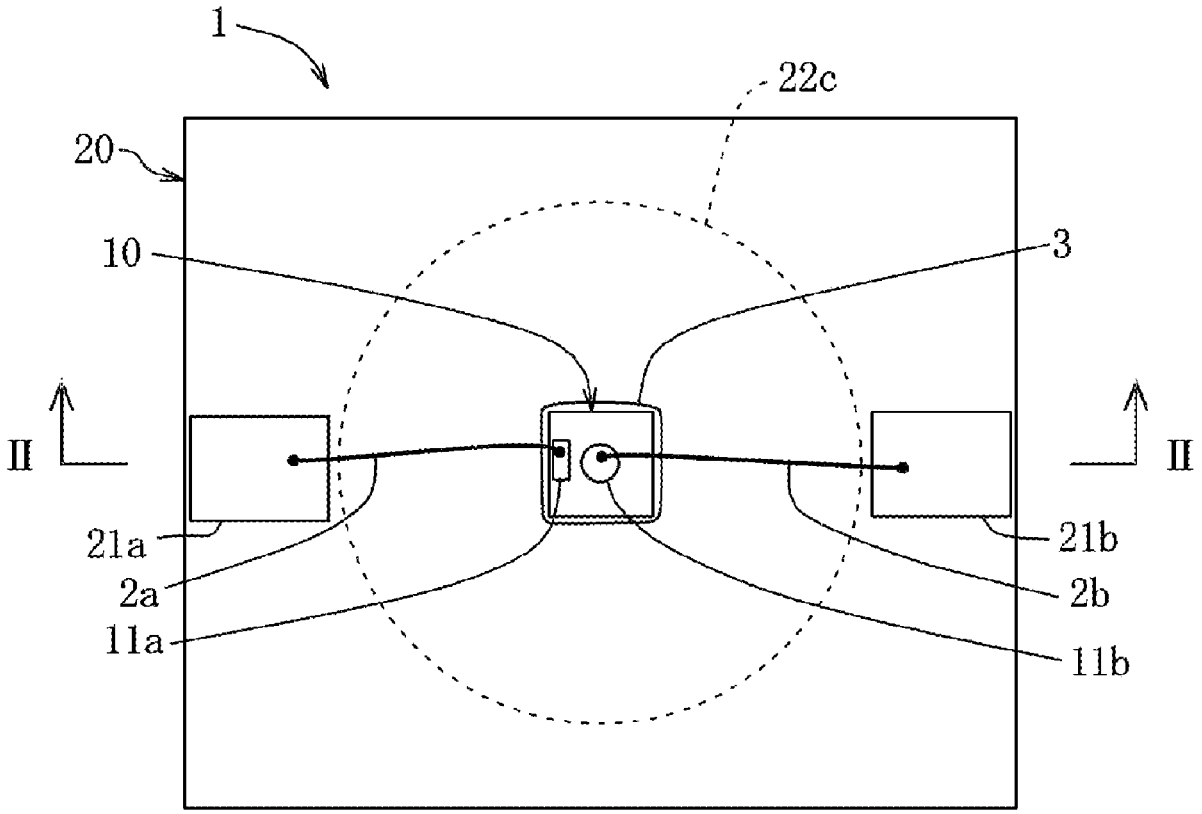
A semiconductor light receiving element in which a photodiode is formed on the main surface side of a first semiconductor substrate, and a cone ave mirror reflecting an incident light toward the light receiving element. The concave mirror comprises a flat first surface of the second semiconductor substrate that is transparent to the incident light, a convex surface formed in a convex shape toward the side opposite to the first surface on the second surface side opposite to the first surface, and a reflective film formed on the convex surface, and the incident light entering from the first surfaceside is reflected by the reflective film to a condensing positionnear the first surface, and the light receiving element was fixed to the first surface so as to overlap the light focusing position of the concave mirror.