US 20240237312A1

(19) United States
(12) Patent Application Publication
LING et al.
(10) Pub. No.: US 2024/0237312 A1
(43) Pub. Date: Jul. 11, 2024

(54) **COOLING APPARATUS OF MOTOR CONTROLLER, MOTOR CONTROLLER, AND VEHICLE**

(71) Applicant: **BYD COMPANY LIMITED**, SHENZHEN (CN)

(72) Inventors: **Heping LING**, Shenzhen (CN); **Haijun LIU**, Shenzhen (CN); **Haixing ZHANG**, Shenzhen (CN); **Xin TAN**, Shenzhen (CN); **Dandan HUANG**, Shenzhen (CN)

(21) Appl. No.: **18/611,985**

(22) Filed: **Mar. 21, 2024**

Related U.S. Application Data

(63) Continuation of application No. PCT/CN2022/134371, filed on Nov. 25, 2022.

(30) **Foreign Application Priority Data**

Dec. 31, 2021 (CN) 202123405296.X

Publication Classification

(51) **Int. Cl.**
H05K 7/20 (2006.01)

(52) **U.S. Cl.**
CPC ***H05K 7/20927*** (2013.01)

(57) **ABSTRACT**
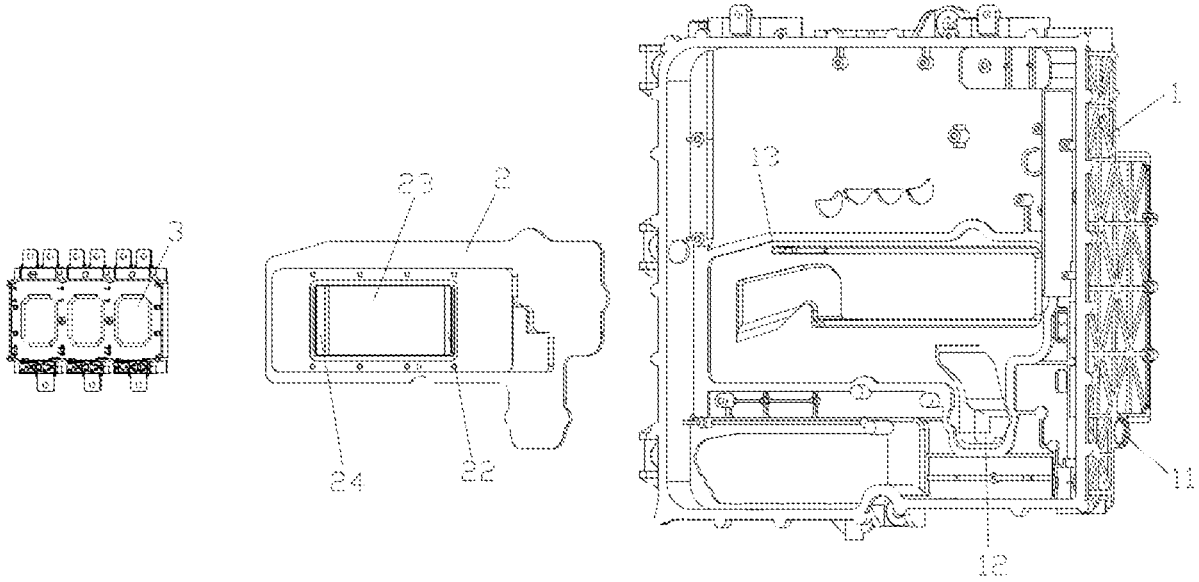
A cooling apparatus of a motor controller includes a water pipeline cover plate mounted on a motor controller body which includes a water pipeline inlet, an inlet of an inner water pipeline, an outlet of the inner water pipeline, and a water pipeline outlet. The water pipeline cover plate includes a water pipeline cover plate inlet, a power-module water inlet, a mounting groove, a power-module water outlet, and a water pipeline cover plate outlet. A heat-dissipation surface of the power module and a surface of the mounting groove surround a cooling accommodating cavity. The water pipeline inlet, the inlet of the inner water pipeline, the water pipeline cover plate inlet, and the water pipeline cover plate inlet communicate with the power-module water inlet, the cooling accommodating cavity, the power-module water outlet, and the water pipeline cover plate outlet.