US 20230231371A1

(19) United States

(12) Patent Application Publication

(10) Pub. No.: US 2023/0231371 A1

(43) Pub. Date: Jul. 20, 2023

Favreau et al.

(54) ELECTROMECHANICAL ASSEMBLY HAVING INTEGRATED CONDUCTOR

(71) Applicant: **Raytheon Company**, Waltham, MA (US)

(72) Inventors: **Channing P. Favreau**, Barre, MA (US); **Alexander Gilbert**, Boston, MA (US); **Thomas V. Sikina**, Acton, MA (US)

(73) Assignee: **Raytheon Company**, Waltham, MA (US)

(21) Appl. No.: **17/658,344**

(22) Filed: **Apr. 7, 2022**

Related U.S. Application Data

(60) Provisional application No. 63/300,389, filed on Jan. 18, 2022.

Publication Classification

(51) **Int. Cl.**

H02G 15/10 (2006.01)

H05K 5/02 (2006.01)

(52) **U.S. Cl.**

CPC *H02G 15/10* (2013.01); *H05K 5/0247* (2013.01)

(57) **ABSTRACT**
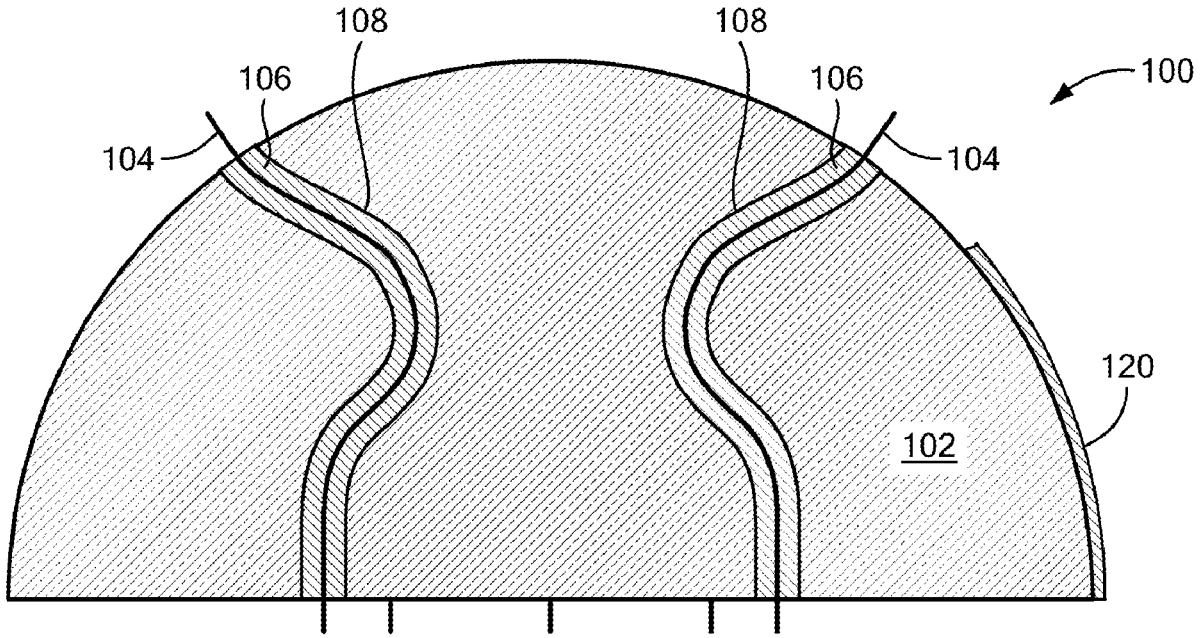
Methods and apparatus for a housing assembly including a housing comprising a conductive material, a conductor extending through the housing, and a dielectric material at least partially surrounding the conductor. Portions of the housing may surround the conductor such that the conductor, the dielectric, and the portions of the housing form a channel through the housing.