US 20230230778A1

(19) United States
(12) Patent Application Publication
Wang

(10) Pub. No.: US 2023/0230778 A1
(43) Pub. Date: Jul. 20, 2023

(54) **RECEIVING CASE AND CHASSIS HAVING THE SAME**

(71) Applicant: **Wistron Corporation**, New Taipei City (TW)

(72) Inventor: **Jun-Hao Wang**, New Taipei City (TW)

(21) Appl. No.: **17/704,179**

(22) Filed: **Mar. 25, 2022**

(30) **Foreign Application Priority Data**

Jan. 18, 2022 (CN) 202210053124.0

Publication Classification

(51) **Int. Cl.**
H01G 11/78 (2006.01)

(52) **U.S. Cl.**
CPC *H01G 11/78* (2013.01)

(57) **ABSTRACT**
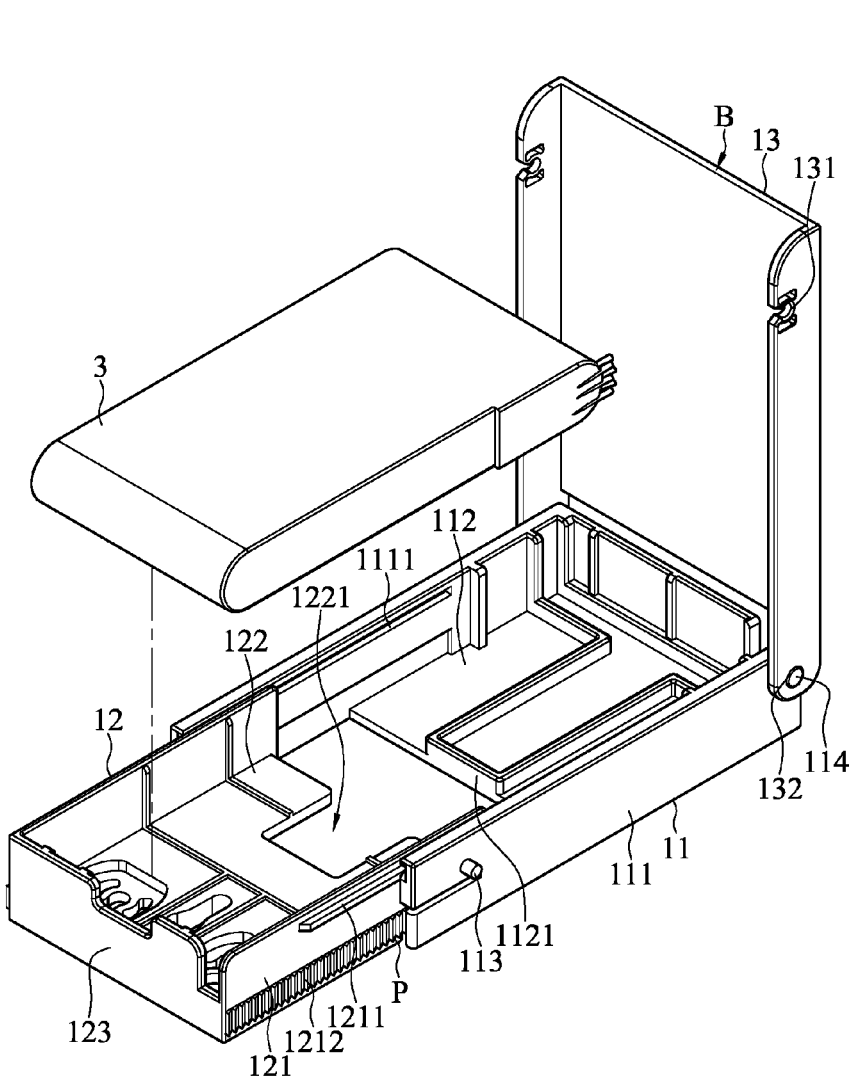
A chassis includes a receiving case. The receiving case includes a first base, a second base, and a cover. The first base includes two first side walls. One of the two first side walls includes a first sliding portion. One of the two first side walls includes a multi-segment positioning portion. The second base includes two second side walls. One of the two second side walls includes a second sliding portion. One of the two second side walls includes a multi-segment alignment portion. The cover is pivoted on the first base. The first sliding portion is connected to the second sliding portion, and the multi-segment positioning portion of the first base is adapted to be engaged with the multi-segment alignment portion of the second base, so that the second base is slidably disposed on the first base. The receiving case is adapted to accommodate electronic elements.