US 20230231347A1

(19) United States
(12) Patent Application Publication
WANG et al.
(10) Pub. No.: US 2023/0231347 A1
(43) Pub. Date: Jul. 20, 2023

(54) TELECOMMUNICATIONS JACK ADAPTER

(71) Applicant: **CommScope Technologies LLC**, Hickory, NC (US)

(72) Inventors: **Jing WANG**, Jiangsu (CN); **Wenyong WU**, Jiangsu (CN)

(73) Assignee: **CommScope Technologies LLC**, Hickory, NC (US)

(21) Appl. No.: **18/002,257**

(22) PCT Filed: **Jul. 2, 2021**

(86) PCT No.: **PCT/US2021/040362**

§ 371 (c)(1),
(2) Date: **Dec. 16, 2022**

(30) **Foreign Application Priority Data**

Jul. 2, 2020 (CN) 202010634338.8
Jul. 2, 2020 (CN) 202021290352.2

Publication Classification

(51) **Int. Cl.**
H01R 13/74 (2006.01)

(52) **U.S. Cl.**
CPC ***H01R 13/745*** (2013.01); *H01R 24/64* (2013.01)

(57) **ABSTRACT**
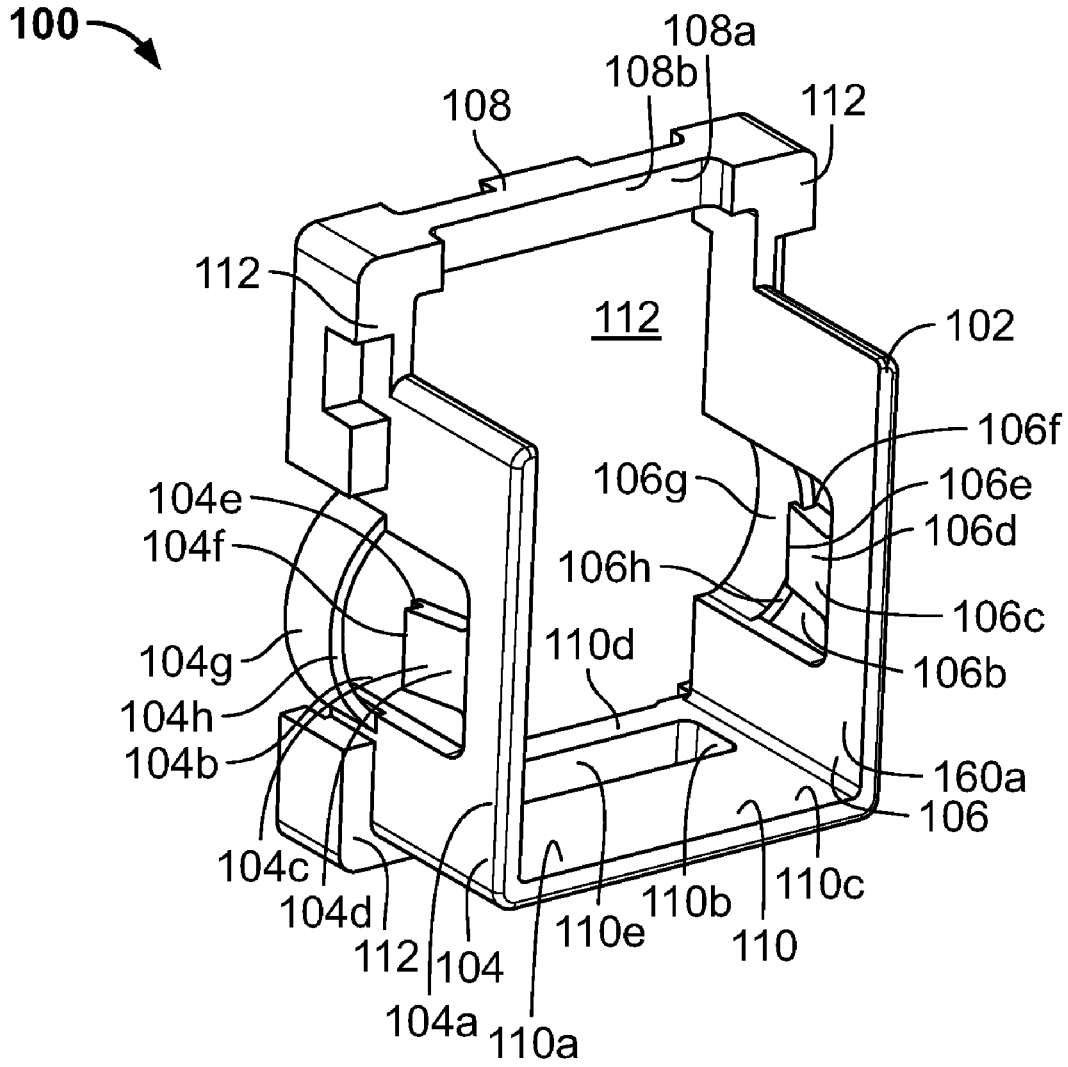
A telecommunications jack adapter for receiving multiple types of jacks can include an opening structure having a main body defining a central opening for receiving a first jack type having a first dimension and a second jack type having a second dimension greater than the first dimension, wherein the main body is flexible such that the opening structure matches the first dimension in a relaxed state and matches the second dimension in an expanded state. In some examples, the main body has deflectable latch members configured to engage with an opening structure configured to receive a third jack type.