US 20230231078A1

(19) United States
(12) Patent Application Publication
SO et al.

(10) Pub. No.: US 2023/0231078 A1
(43) Pub. Date: Jul. 20, 2023

(54) **DISPLAY DEVICE AND METHOD OF MANUFACTURING THE SAME**

(71) Applicant: **Samsung Display Co., LTD.**, Yongin-si (KR)

(72) Inventors: **Myeong Su SO**, Seoul (KR); **Myeong Hee KIM**, Yongin-si (KR); **Seul Ki KIM**, Gwangmyeong-si (KR)

(73) Assignee: **Samsung Display Co., LTD.**, Yongin-si (KR)

(21) Appl. No.: **17/940,091**

(22) Filed: **Sep. 8, 2022**

(30) **Foreign Application Priority Data**

Jan. 20, 2022 (KR) 10-2022-0008382

Publication Classification

(51) **Int. Cl.**
H01L 33/38 (2006.01)
H01L 33/62 (2006.01)
H01L 33/00 (2006.01)

(52) **U.S. Cl.**
CPC ***H01L 33/382*** (2013.01); ***H01L 33/005*** (2013.01); ***H01L 33/62*** (2013.01); *H01L 2933/0016* (2013.01); *H01L 2933/0066* (2013.01)

(57) **ABSTRACT**
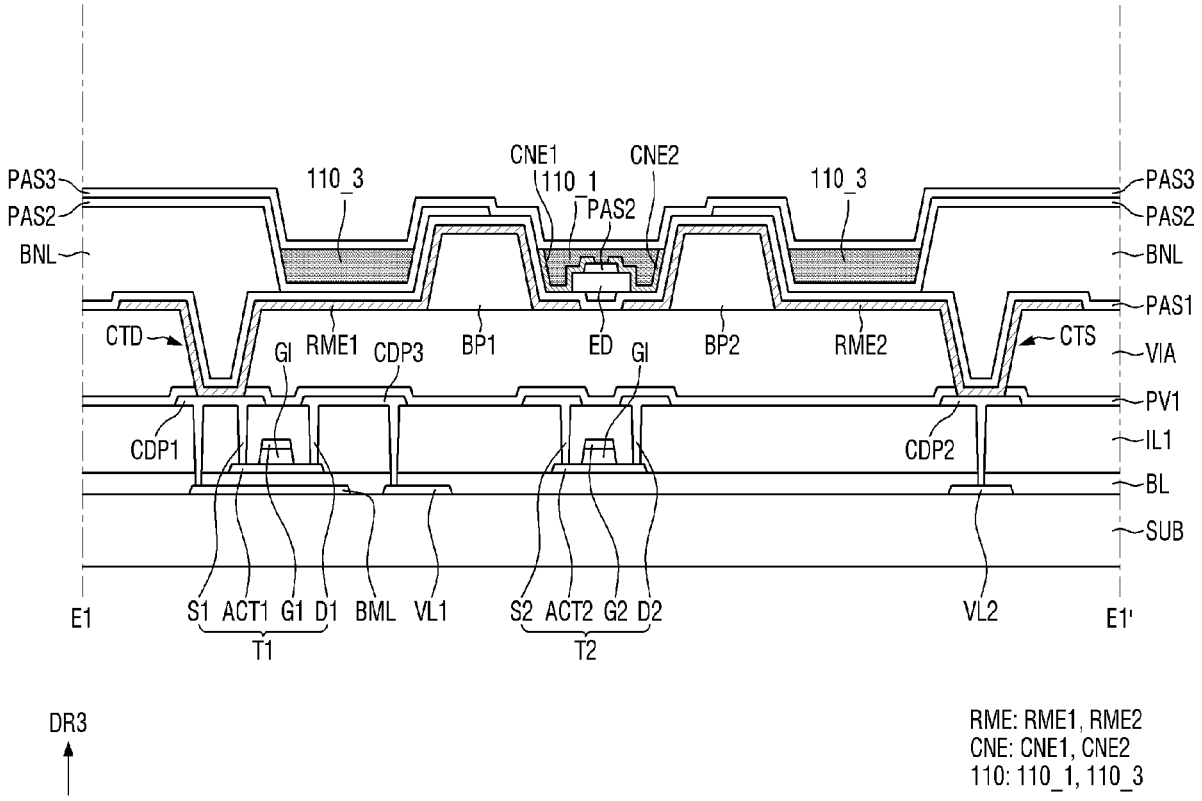
A display device includes a first electrode and a second electrode that are disposed on a substrate to be spaced apart from each other, a first insulating layer disposed on the first electrode and the second electrode, a light emitting element disposed on the first insulating layer, a first connection electrode in electrical contact with a first end of the light emitting element on the first insulating layer, and an organic layer disposed on the first connection electrode and surrounding the light emitting element.