US 20230232199A1

(19) United States
(12) Patent Application Publication
Vassilovski et al.
(10) Pub. No.: US 2023/0232199 A1
(43) Pub. Date: Jul. 20, 2023

(54) **USER EQUIPMENT SIGNALING FOR VEHICLE ALERTING**

(71) Applicant: **QUALCOMM Incorporated**, San Diego, CA (US)

(72) Inventors: **Dan Vassilovski**, Del Mar, CA (US); **Gene Wesley Marsh**, San Diego, CA (US); **Gabi Sarkis**, San Diego, CA (US); **Hong Cheng**, Basking Ridge, NJ (US); **Shailesh Patil**, San Diego, CA (US)

(21) Appl. No.: **17/576,772**

(22) Filed: **Jan. 14, 2022**

Publication Classification

(51) **Int. Cl.**

H04W 4/90	(2006.01)
H04W 4/40	(2006.01)
H04W 4/12	(2006.01)
H04W 4/029	(2006.01)
H04W 4/02	(2006.01)
H04W 76/14	(2006.01)

(52) **U.S. Cl.**

CPC ***H04W 4/90*** (2018.02); ***H04W 4/40*** (2018.02); ***H04W 4/12*** (2013.01); ***H04W 4/029*** (2018.02); ***H04W 4/026*** (2013.01); ***H04W 4/027*** (2013.01); ***H04W 76/14*** (2018.02); *H04W 92/18* (2013.01)

(57) **ABSTRACT**
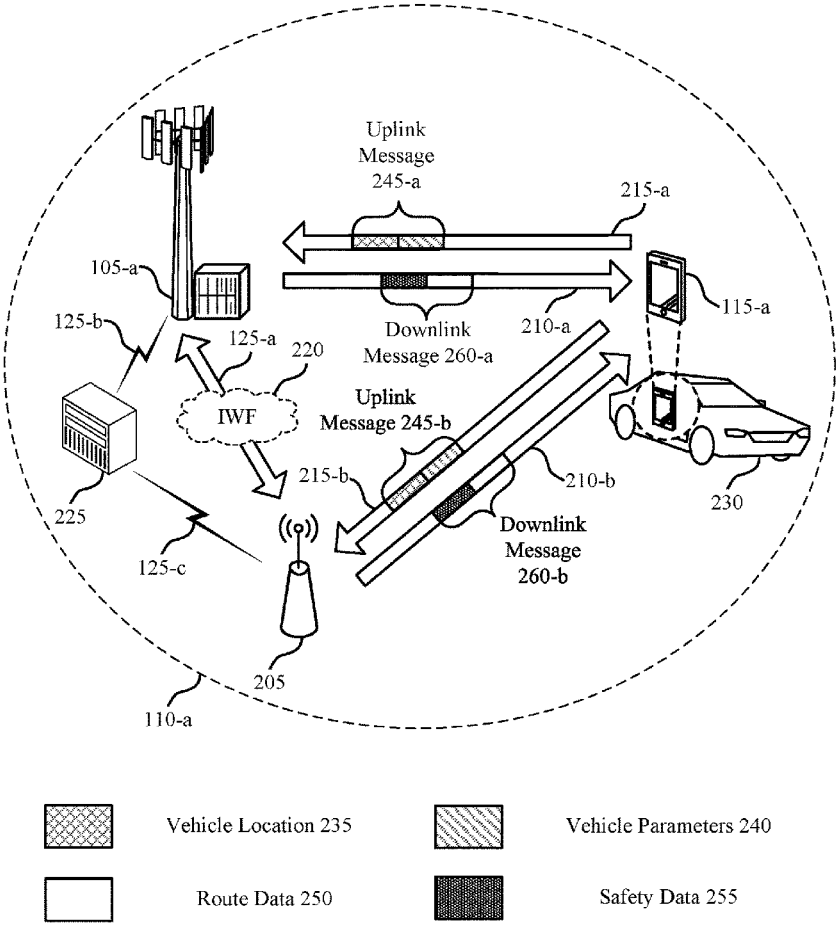
Methods, systems, and devices for wireless communications are described. A user equipment (UE) may identify the UE is associated with a vehicle, such as being within the vehicle, or has established connectivity with the vehicle. The UE may transmit location information of the vehicle and one or more vehicle parameters to a network entity, such as a roadside unit (RSU) or a base station. The network entity may identify route data, safety data, or both. The network entity may transmit the route data, the safety data, or both to the UE.