US 20220352766A1

(19) United States
(12) Patent Application Publication
BOBER et al.
(10) Pub. No.: US 2022/0352766 A1
(43) Pub. Date: Nov. 3, 2022

(54) **CHARGER SHELF**

(71) Applicant: **WBTEC, LLC**, Sarasota, FL (US)

(72) Inventors: **Wieslaw BOBER**, Hopewell Junction, NY (US); **Kamil SIENKIEL**, Wegrzce (PL); **Dominik Stanislaw SIENKIEL**, Ostrowiec Swietokrzyski (PL)

(21) Appl. No.: **17/850,445**

(22) Filed: **Jun. 27, 2022**

Related U.S. Application Data

(63) Continuation-in-part of application No. 16/681,487, filed on Nov. 12, 2019, now Pat. No. 11,374,417.

(60) Provisional application No. 62/758,239, filed on Nov. 9, 2018.

(30) **Foreign Application Priority Data**

Jul. 16, 2021 (PL) 438515

Publication Classification

(51) **Int. Cl.**

H02J 50/90	(2006.01)
H02J 50/10	(2006.01)
H02J 7/00	(2006.01)
H02J 7/35	(2006.01)

(52) **U.S. Cl.**

CPC ***H02J 50/90*** (2016.02); ***H02J 50/10*** (2016.02); ***H02J 7/0044*** (2013.01); ***H02J 7/35*** (2013.01)

(57) **ABSTRACT**
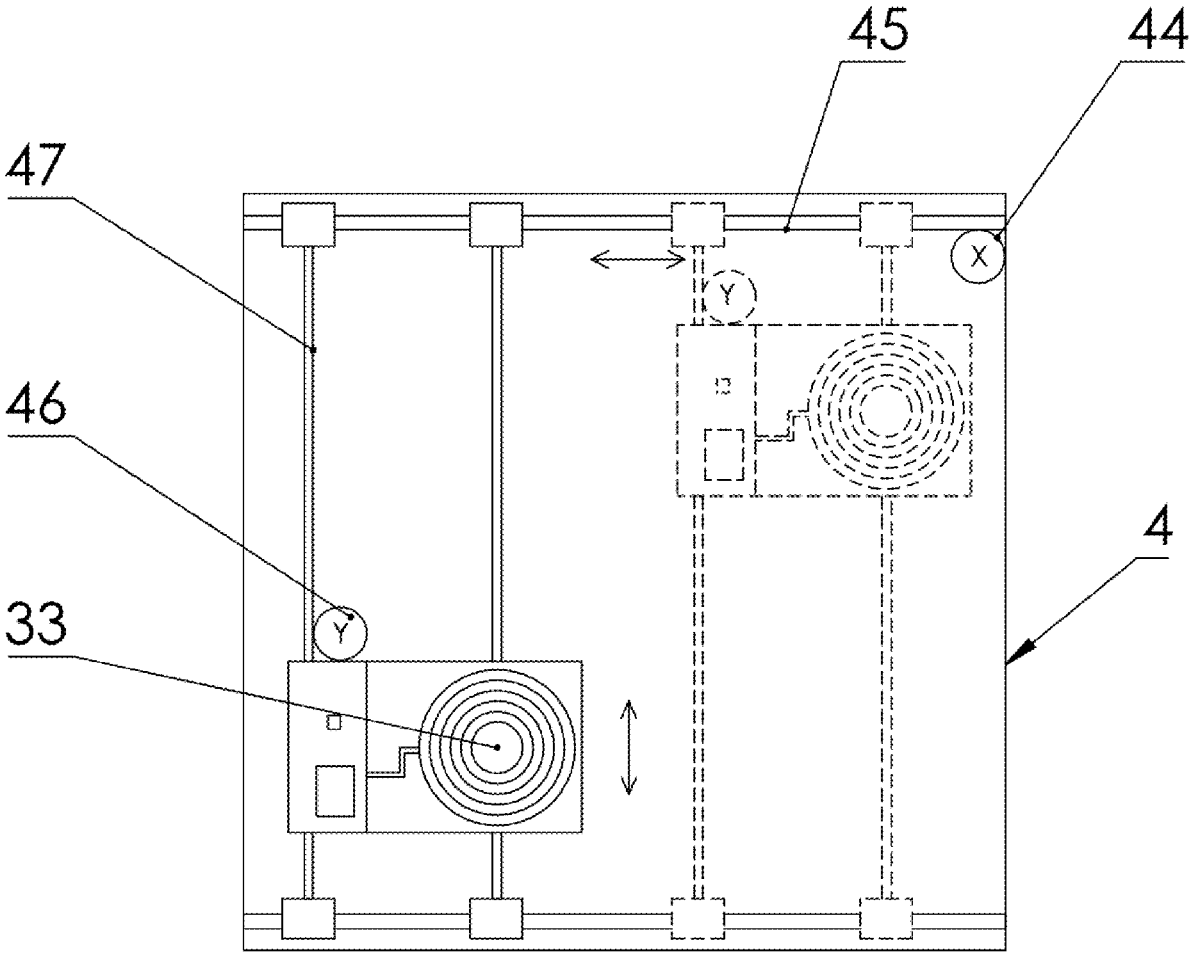
A charger shelf for wireless charging a portable electronic device located thereon is provided. The charger shelf includes a shelf mounted on a holder and configured to move in a direction of at least one of an X, Y or Z axis from a rest position to an optimal charging positional using an internal drive unit mounted in the shelf, and a charging module connected to an electrical power source and positioned inside the shelf and equipped with at least one coil supplying power to the portable electronic device, the charging module determining an area configured to charge the portable electronic device.