US 20220368162A1

(19) United States

(12) Patent Application Publication

(10) Pub. No.: US 2022/0368162 A1

(43) Pub. Date: Nov. 17, 2022

OKAMOTO et al.

(54) POWER TRANSMISSION COIL, POWER TRANSMISSION DEVICE, AND UNDERWATER POWER SUPPLY SYSTEMS

(71) Applicant: **PANASONIC CORPORATION**, Osaka (JP)

(72) Inventors: **Katsuya OKAMOTO**, Tokyo (JP); **Shuichiro YAMAGUCHI**, Fukuoka (JP); **Souichi KAWATA**, Fukuoka (JP)

(73) Assignee: **PANASONIC CORPORATION**, Osaka (JP)

(21) Appl. No.: **17/763,464**

(22) PCT Filed: **Sep. 25, 2020**

(86) PCT No.: **PCT/JP2020/036429**

§ 371 (c)(1),
(2) Date: **Jun. 7, 2022**

(30) **Foreign Application Priority Data**

Sep. 26, 2019 (JP) 2019-175943

Publication Classification

(51) **Int. Cl.**

H02J 50/12	(2006.01)
H02J 50/00	(2006.01)
H02J 50/40	(2006.01)
H02J 50/80	(2006.01)
B60L 53/12	(2006.01)

(52) **U.S. Cl.**

CPC ***H02J 50/12*** (2016.02); ***H02J 50/005*** (2020.01); ***H02J 50/402*** (2020.01); ***H02J 50/80*** (2016.02); ***B60L 53/12*** (2019.02)

(57) **ABSTRACT**
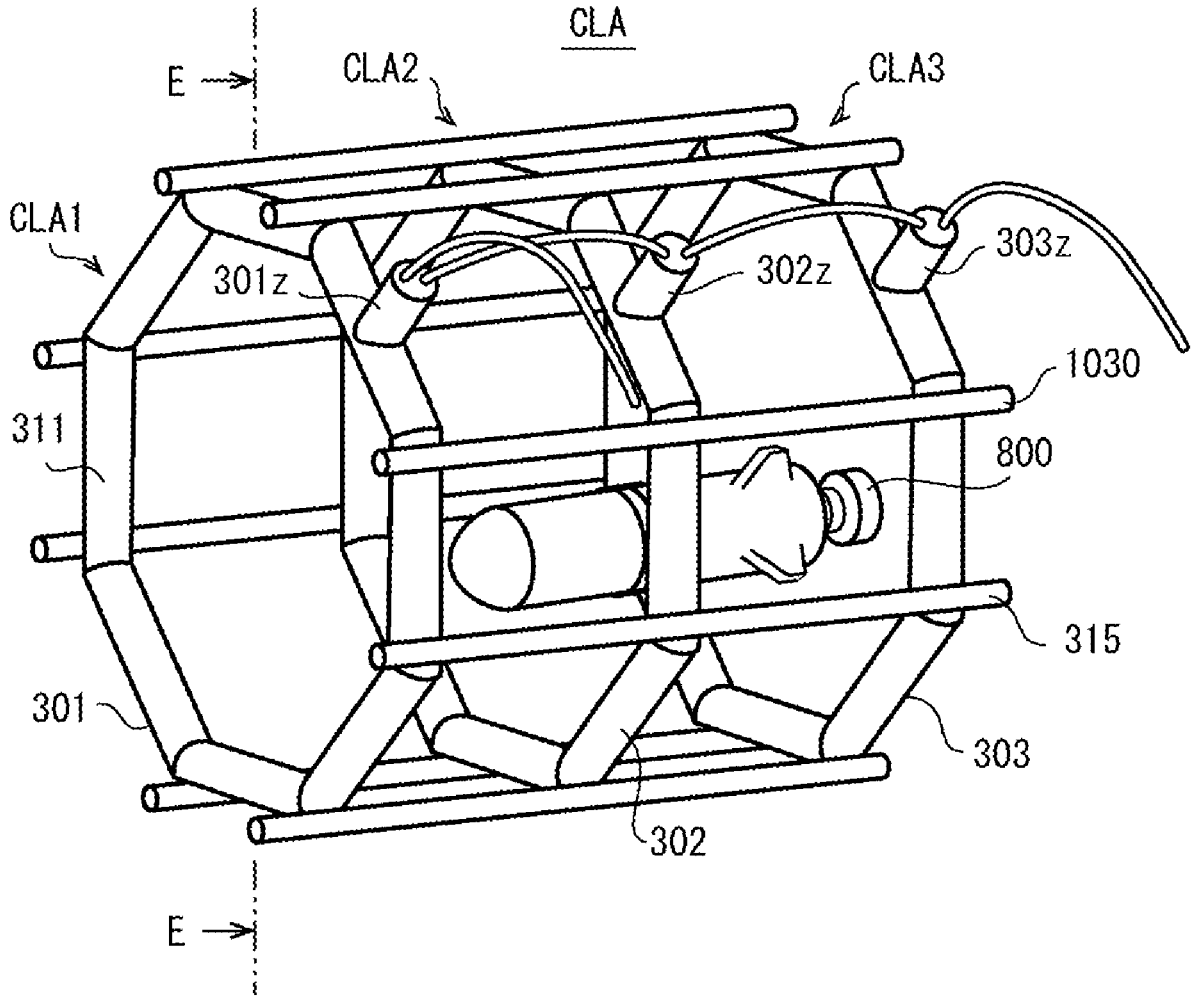
A power transmission coil includes a plurality of coil members each of which having a length capable of surrounding at least one power reception device located under water from all directions and that are configured to wirelessly transmit power to the power reception device. Each of the plurality of coil members includes a polygonal pipe having a polygonal shape in which a plurality of straight pipes are welded, and a conductive wire that is inserted into the polygonal pipe and is wound a plurality of times.