US 20220369451A1

(19) United States

(12) Patent Application Publication

LI et al.

(10) Pub. No.: US 2022/0369451 A1

(43) Pub. Date: Nov. 17, 2022

(54) **CIRCUIT BOARD AND COMMUNICATION DEVICE**

(71) Applicant: **ZTE CORPORATION**, Shenzhen, Guangdong (CN)

(72) Inventors: **Jinlong LI**, Shenzhen, Guangdong (CN); **Xindan ZHANG**, Shenzhen, Guangdong (CN); **Bi YI**, Shenzhen, Guangdong (CN); **Zhongmin WEI**, Shenzhen, Guangdong (CN)

(21) Appl. No.: **17/761,180**

(22) PCT Filed: **Sep. 24, 2020**

(86) PCT No.: **PCT/CN2020/117493**

§ 371 (c)(1),
(2) Date: **Mar. 16, 2022**

(30) **Foreign Application Priority Data**

Sep. 26, 2019 (CN) 201910916145.9

Publication Classification

(51) **Int. Cl.**
H05K 1/02 (2006.01)

(52) **U.S. Cl.**
CPC ***H05K 1/0218*** (2013.01); ***H05K 1/0245*** (2013.01); ***H05K 1/0298*** (2013.01); *H05K 2201/09236* (2013.01); *H05K 2201/09327* (2013.01)

(57) **ABSTRACT**
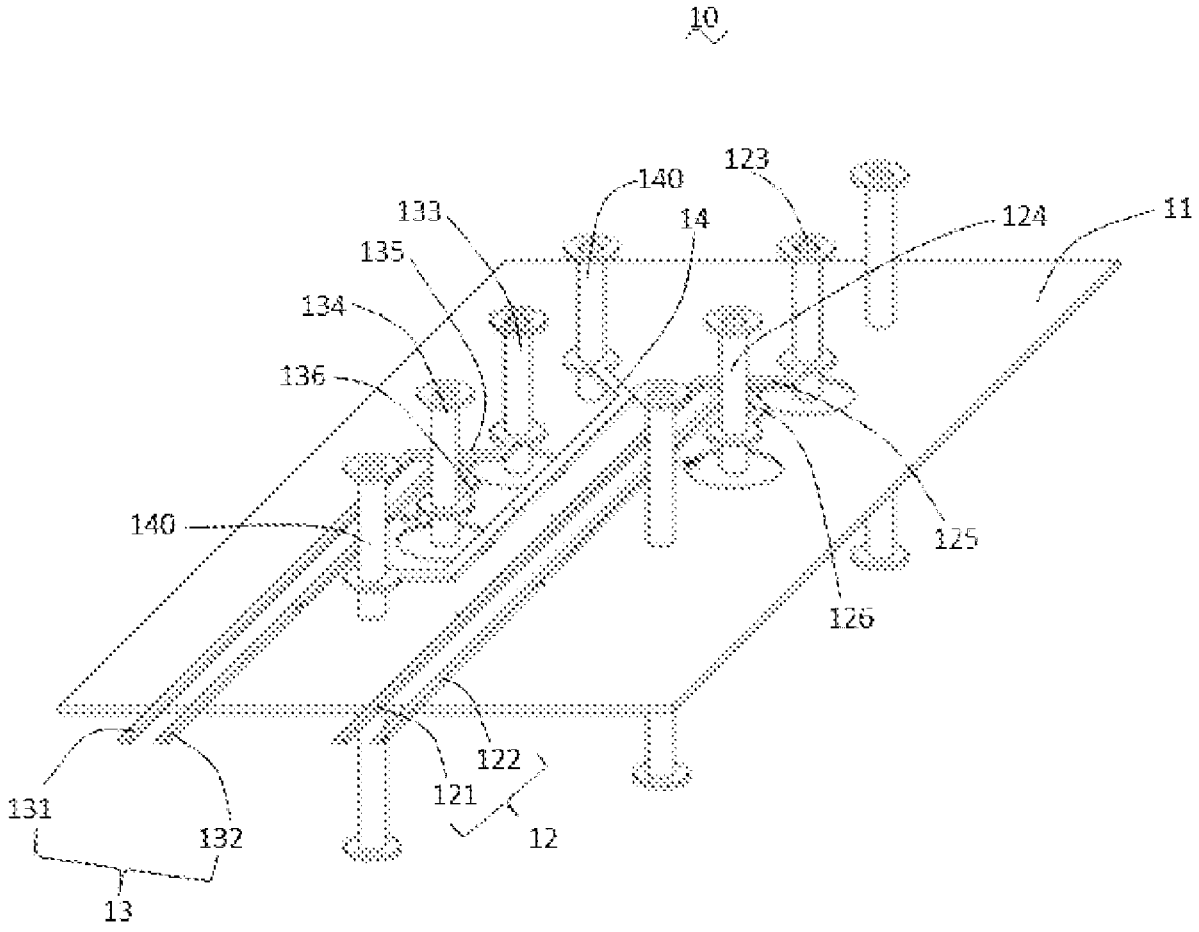
Embodiments of the present disclosure relate to the field of communication device technology, which provide a circuit board including a first signal line and a second signal line that are disposed adjacent to each other, a ground plane, and a conductive layer connected to the ground plane. The conductive layer is disposed between the first signal line and the second signal line. Embodiments of the present disclosure further provide a communication device.