US 20240235211A1

(19) United States

(12) Patent Application Publication

Thiele et al.

(10) Pub. No.: US 2024/0235211 A1

(43) Pub. Date: Jul. 11, 2024

(54) COMPACT POWER TOOL DATA LOGGER

(71) Applicant: **MILWAUKEE ELECTRIC TOOL CORPORATION**, Brookfield, WI (US)

(72) Inventors: **John W. Thiele**, Belgium, WI (US); **Richard A. Zainer**, Hubertus, WI (US); **Matthew Post**, Milwaukee, WI (US); **Gareth Mueckl**, Milwaukee, WI (US); **Jonathan E. Abbott**, Milwaukee, WI (US); **Matthew N. Thurin**, Richfield, WI (US); **Kellen Carey**, Portland, OR (US)

(21) Appl. No.: **18/543,172**

(22) Filed: **Dec. 18, 2023**

Related U.S. Application Data

(63) Continuation of application No. 16/739,304, filed on Jan. 10, 2020, now Pat. No. 11,848,579.

(60) Provisional application No. 62/791,274, filed on Jan. 11, 2019.

Publication Classification

(51) **Int. Cl.**

H02J 7/00	(2006.01)
B25F 5/02	(2006.01)
G06F 1/12	(2006.01)
H04W 4/029	(2006.01)

(52) **U.S. Cl.**

CPC ***H02J 7/00032*** (2020.01); ***B25F 5/02*** (2013.01); ***G06F 1/12*** (2013.01); ***H02J 7/0048*** (2020.01); ***H04W 4/029*** (2018.02)

(57) **ABSTRACT**
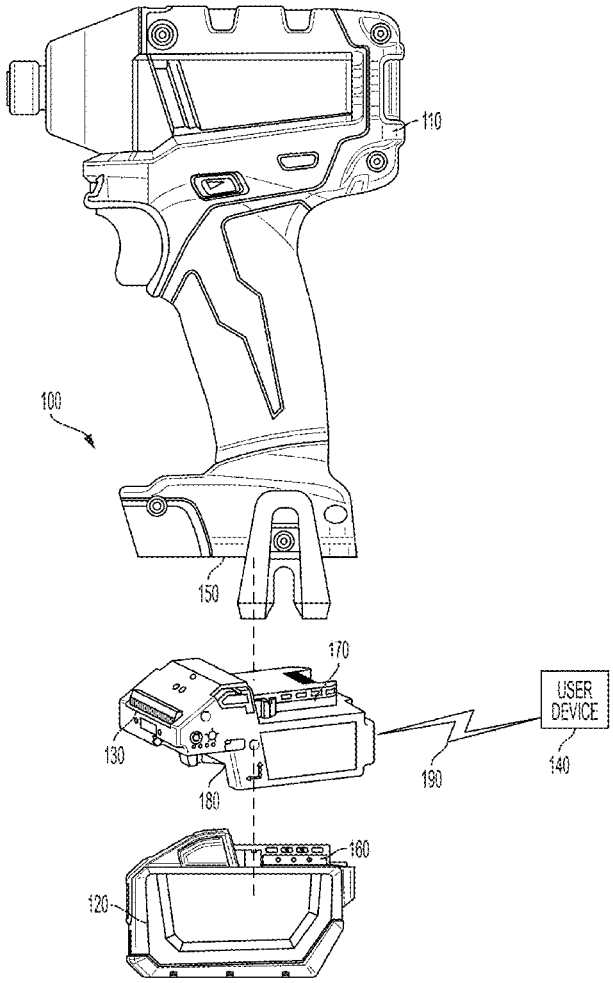
A data logger device for a power tool including a housing, a power tool interface provided at the top of the housing and configured to be received in a corresponding interface of the power tool, and a battery pack interface provided at the bottom of the housing and configured to receive a corresponding interface of a battery pack providing operating power to the power tool. The data logger also includes a tool terminal block, a battery terminal block provided, and bus bars connecting the tool terminal block to the battery terminal block to provide pass through power from the battery pack to the power tool. The data logger is configured to obtain data related to power tool operation, and export, using a transceiver, the data to a user device.