US 20240213865A1

(19) United States
(12) Patent Application Publication
Mao et al.
(10) Pub. No.: US 2024/0213865 A1
(43) Pub. Date: Jun. 27, 2024

(54) **LINEAR VIBRATION MOTOR**

(71) Applicant: **AAC Microtech (Changzhou) Co., Ltd.**, Changzhou City, Jiangsu Province (CN)

(72) Inventors: **Lubin Mao**, Shenzhen (CN); **Ziang Li**, Shenzhen (CN)

(21) Appl. No.: **17/915,511**

(22) PCT Filed: **Jul. 20, 2022**

(86) PCT No.: **PCT/CN2022/106638**

§ 371 (c)(1),
(2) Date: **Jan. 4, 2024**

(30) **Foreign Application Priority Data**

Jun. 30, 2022 (CN) 202210765358.8

Publication Classification

(51) **Int. Cl.**

H02K 33/02	(2006.01)
H02K 1/14	(2006.01)
H02K 33/18	(2006.01)

(52) **U.S. Cl.**

CPC ***H02K 33/02*** (2013.01); ***H02K 1/14*** (2013.01); ***H02K 33/18*** (2013.01)

(57) **ABSTRACT**
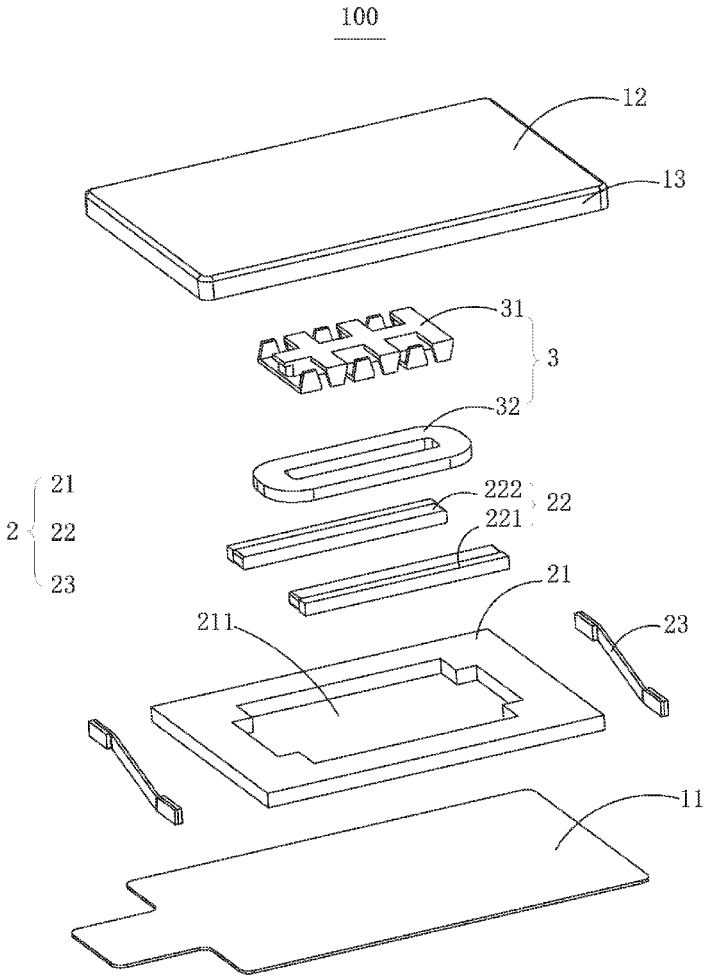
A linear vibration motor includes a vibration assembly including a mass block and a magnet assembly fixed to the mass block; and a stator assembly including an iron core and a coil. The iron core includes an iron core body and an extending structure. The extending structure includes first extending portions, first claw poles bending and extending from the first extending portions to a second end portion, second extending portions extending from the second end portion, and second claw poles bending and extending from the second extending portions. The first and the second claw poles are arranged at intervals along a vibration direction and directly face towards the magnet assembly. With the first and the second claw poles staggered along the vibration direction, the thickness of the linear vibration motor is reduced while ensuring sufficient driving force, so that it can be better applied to light and thin mobile terminals.