US 20240235549A1

(19) United States
(12) Patent Application Publication
HAN et al.
(10) Pub. No.: US 2024/0235549 A1
(43) Pub. Date: Jul. 11, 2024

(54) **SEMICONDUCTOR CIRCUIT CAPABLE OF SWAPPING SIGNAL PATHS AND SEMICONDUCTOR APPARATUS USING THE SAME**

(71) Applicant: **SK hynix Inc.**, Icheon-si Gyeonggi-do (KR)

(72) Inventors: **Hyun Wook HAN**, Icheon-si Gyeonggi-do (KR); **Min Chang KIM**, Icheon-si Gyeonggi-do (KR)

(73) Assignee: **SK hynix Inc.**, Icheon-si Gyeonggi-do (KR)

(21) Appl. No.: **18/609,840**

(22) Filed: **Mar. 19, 2024**

Related U.S. Application Data

(62) Division of application No. 17/685,094, filed on Mar. 2, 2022, now Pat. No. 11,967,950.

(30) **Foreign Application Priority Data**

Jul. 30, 2021 (KR) 10-2021-0100695

Publication Classification

(51) **Int. Cl.**
H03K 19/00 (2006.01)
H03K 3/011 (2006.01)

(52) **U.S. Cl.**
CPC *H03K 19/0005* (2013.01); *H03K 3/011* (2013.01)

(57) **ABSTRACT**
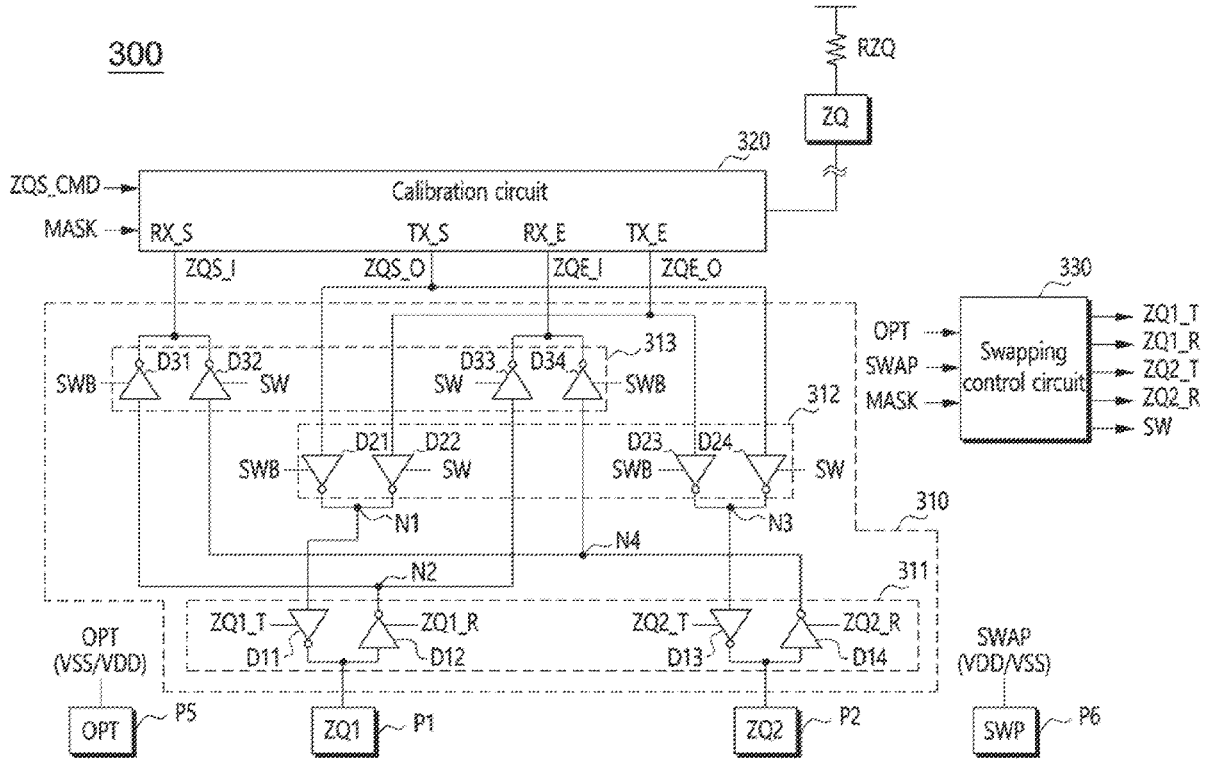
A semiconductor circuit includes a first pad, a second pad, swapping circuit, and an internal circuit. The internal circuit receives a first external signal and a second external signal, and generates a first internal signal and a second internal signal. Based on master information and swapping information, the swapping circuit couples the internal circuit to one of first and second pads to provide a path through which the first internal signal is output and a path through which the first external signal is received, and couples the internal circuit to the other of the first and second pads to provide a path through which the second internal signal is output and a path through which the second external signal is received.