US 20230231420A1

(19) United States
(12) Patent Application Publication
Bhandarkar et al.

(10) Pub. No.: US 2023/0231420 A1
(43) Pub. Date: Jul. 20, 2023

(54) **LOW POWER OBJECT DETECTION IN MULTI-COIL WIRELESS CHARGING SYSTEMS AND RELATED SYSTEMS, METHODS, AND DEVICES**

(71) Applicant: **Microchip Technology Incorporated**, Chandler, AZ (US)

(72) Inventors: **Santosh Bhandarkar**, Chandler, AZ (US); **Alex Dumais**, Boise, ID (US)

(21) Appl. No.: **18/186,837**

(22) Filed: **Mar. 20, 2023**

Related U.S. Application Data

(63) Continuation of application No. 17/451,673, filed on Oct. 21, 2021, now Pat. No. 11,611,243, which is a continuation of application No. 16/863,865, filed on Apr. 30, 2020, now Pat. No. 11,159,062.

(60) Provisional application No. 62/984,722, filed on Mar. 3, 2020.

Publication Classification

(51) **Int. Cl.**

H02J 50/60	(2006.01)
H02J 50/12	(2006.01)
H02J 50/40	(2006.01)
G01R 27/26	(2006.01)

(52) **U.S. Cl.**
CPC ***H02J 50/60*** (2016.02); ***G01R 27/2611*** (2013.01); ***H02J 50/12*** (2016.02); ***H02J 50/402*** (2020.01)

(57) **ABSTRACT**
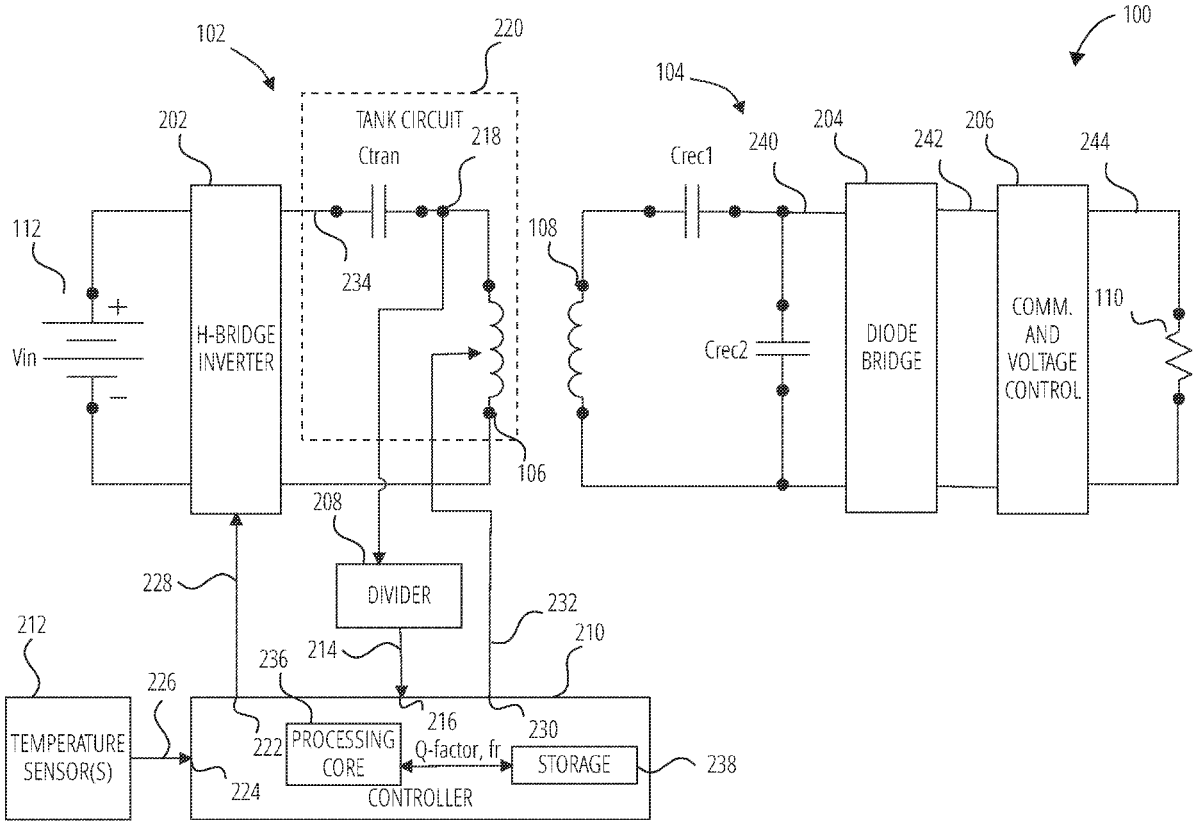
Object detection for wireless power transmitters and related systems, methods, and devices are disclosed. A controller for a wireless power transmitter is configured to receive a measurement voltage potential responsive to a tank circuit signal at a tank circuit, provide an alternating current (AC) signal to each of the plurality of transmit coils one at a time, and determine at least one of a resonant frequency and a quality factor (Q-factor) of the tank circuit responsive to each selected transmit coil of the plurality of transmit coils. The controller is also configured to select a transmit coil to use to transmit wireless power to a receive coil of a wireless power receiver responsive to the determined at least one of the resonant frequency and the Q-factor for each transmit coil of the plurality of transmit coils.