US 20220360233A1

(19) United States
(12) Patent Application Publication
Marbell et al.
(10) Pub. No.: US 2022/0360233 A1
(43) Pub. Date: Nov. 10, 2022

(54) **OUTPUT-INTEGRATED TRANSISTOR DEVICE PACKAGES**

(71) Applicant: **Cree, Inc.**, Durham, NC (US)

(72) Inventors: **Marvin Marbell**, Cary, NC (US); **Jonathan Chang**, Morgan Hill, CA (US)

(21) Appl. No.: **17/313,616**

(22) Filed: **May 6, 2021**

Publication Classification

(51) **Int. Cl.**

H03F 1/56	(2006.01)
H01L 23/047	(2006.01)
H01L 23/66	(2006.01)
H03F 1/02	(2006.01)
H03F 3/21	(2006.01)

(52) **U.S. Cl.**

CPC ***H03F 1/56*** (2013.01); ***H01L 23/047*** (2013.01); ***H01L 23/66*** (2013.01); ***H03F 1/0288*** (2013.01); ***H03F 3/211*** (2013.01); *H01L 2223/6611* (2013.01); *H01L 2223/6655* (2013.01); *H03F 2200/451* (2013.01)

(57) **ABSTRACT**
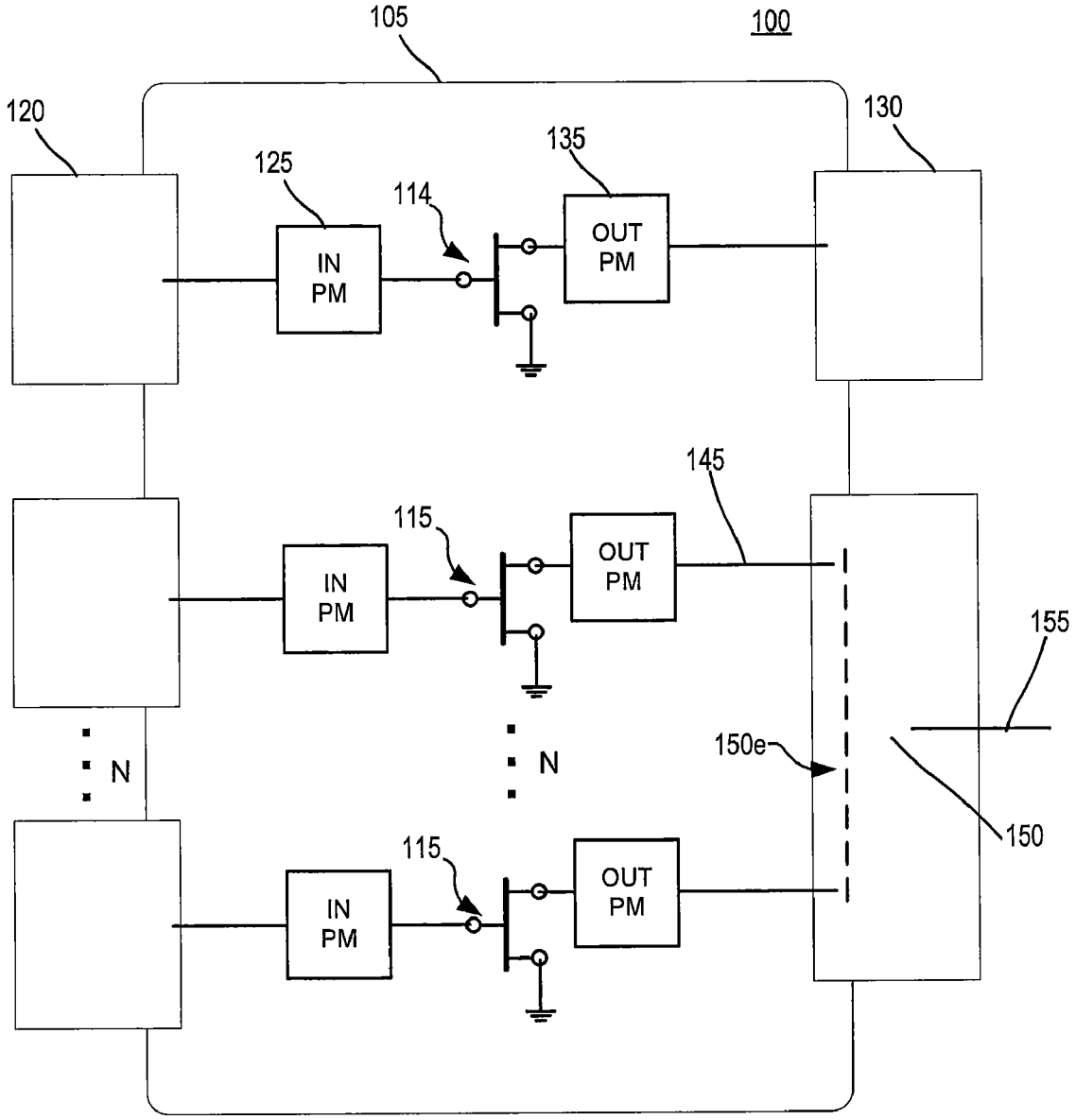
A semiconductor device package includes a plurality of input leads, a plurality of transistor amplifier dies having inputs respectively coupled to the plurality of input leads, and a combined output lead configured to combine output signals received from the plurality of transistor amplifier dies and output a combined signal.