US 20240213964A1

(19) United States
(12) Patent Application Publication
Chiang et al.
(10) Pub. No.: US 2024/0213964 A1
(43) Pub. Date: Jun. 27, 2024

(54) **TEMPERATURE COMPENSATED OSCILLATOR AND RING OSCILLATOR TEMPERATURE COMPENSATION METHOD**

(71) Applicant: **Richtek Technology Corporation**, Zhubei City (TW)

(72) Inventors: **Chia-Tseng Chiang**, New Taipei (TW); **Yi-Hsiang Juan**, Taipei (TW)

(21) Appl. No.: **18/533,439**

(22) Filed: **Dec. 8, 2023**

(30) **Foreign Application Priority Data**

Dec. 27, 2022 (TW) 111150204

Publication Classification

(51) **Int. Cl.**
H03K 3/03 (2006.01)

(52) **U.S. Cl.**
CPC *H03K 3/0315* (2013.01)

(57) **ABSTRACT**
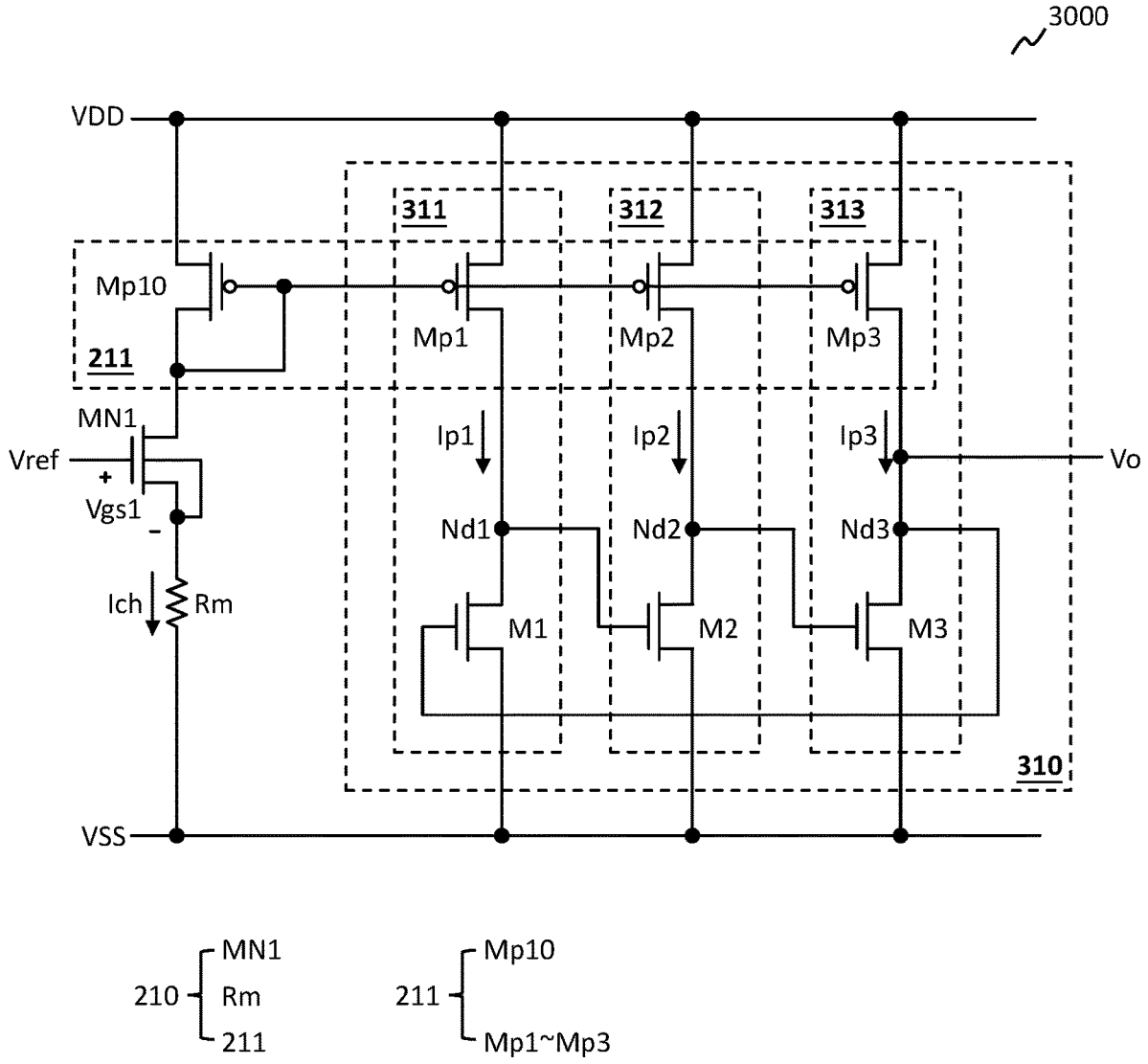
A temperature compensated oscillator includes: a current source configured to generate a proportional to absolute temperature (PTAT) current; and a ring oscillator which has a complementary to absolute temperature (CTAT) oscillation frequency and is configured to receive the PTAT current to generate an oscillation signal. The current source includes a tracking MOS device and a resistor which are coupled in series. The tracking MOS device and at least one MOS device of the ring oscillator have the same conductive type, and a gate-source voltage of the tracking MOS device and a gate-source voltage of the at least one MOS device have the same CTAT coefficient, such that when the temperature compensated oscillator operates, the tracking MOS device and the at least one of the first MOS device have a tracking effect to compensate the CTAT oscillation frequency.