US 20220360190A1

(19) United States

(12) Patent Application Publication

GONTHIER

(10) Pub. No.: US 2022/0360190 A1

(43) Pub. Date: Nov. 10, 2022

(54) ELECTRONIC CIRCUIT WITH THYRISTOR

(71) Applicant: **STMICROELECTRONICS LTD**, Kowloon (HK)

(72) Inventor: **Laurent GONTHIER**, Taipei City (TW)

(73) Assignee: **STMICROELECTRONICS LTD**, Kowloon (HK)

(21) Appl. No.: **17/736,668**

(22) Filed: **May 4, 2022**

(30) **Foreign Application Priority Data**

May 7, 2021 (FR) 2104852

Publication Classification

(51) **Int. Cl.**
H02M 7/155 (2006.01)
H02M 1/42 (2006.01)

(52) **U.S. Cl.**
CPC ***H02M 7/1557*** (2013.01); ***H02M 1/4208*** (2013.01)

(57) **ABSTRACT**
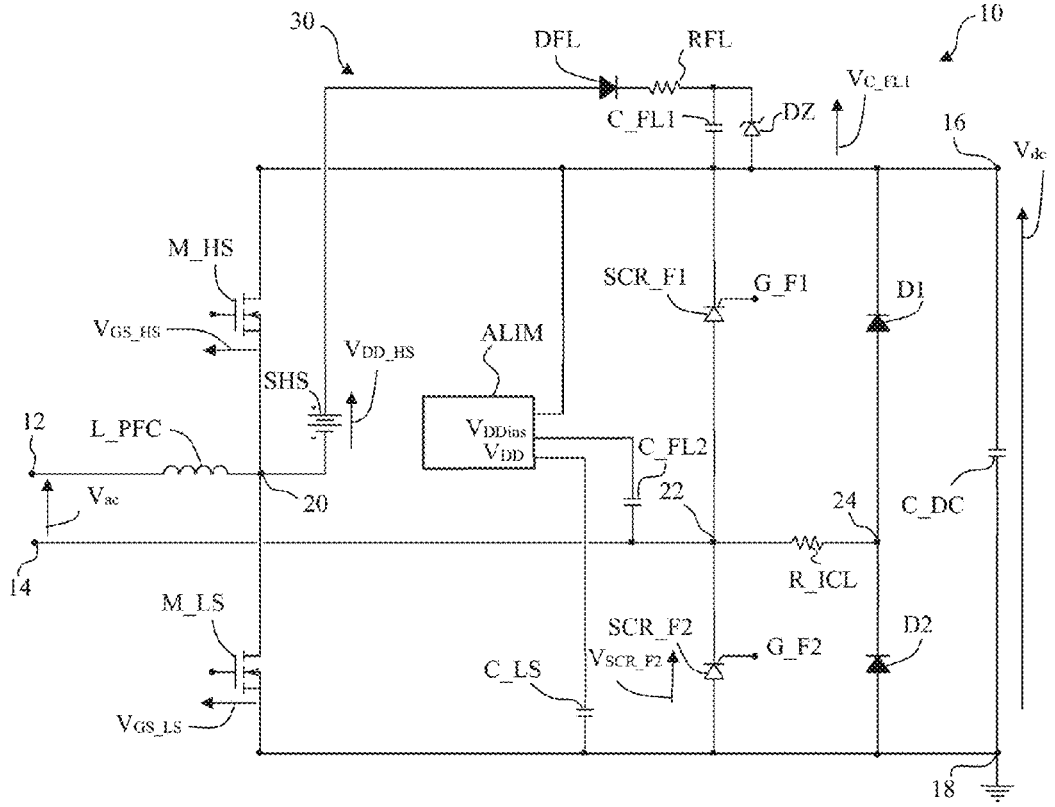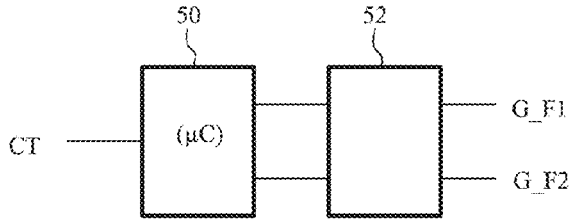
The present description concerns a converter comprising an AC-DC conversion stage comprising a first thyristor, a first power supply circuit delivering a first reference voltage between a first node and a second node, and a second power supply circuit delivering a second reference voltage between third and fourth nodes, the cathode of the first thyristor being coupled to the first node of the first power supply circuit by a first switch and being connected to the fourth node, the second power supply circuit comprising a first rectifying element coupled to the second node of the first power supply circuit and coupled to the third node.