US 20220352868A1

(19) United States

(12) Patent Application Publication

Kay et al.

(10) Pub. No.: US 2022/0352868 A1

(43) Pub. Date: Nov. 3, 2022

(54) **TRANSVERSELY-EXCITED FILM BULK ACOUSTIC RESONATOR WITH BURIED OXIDE STRIP ACOUSTIC CONFINEMENT STRUCTURES**

(71) Applicant: **Resonant Inc.**, Austin, TX (US)

(72) Inventors: **Andrew Kay**, Provo, UT (US); **Sean McHugh**, Santa Barbara, CA (US); **John Koulakis**, Los Angeles, CA (US); **Albert Cardona**, Santa Barbara, CA (US)

(21) Appl. No.: **17/555,353**

(22) Filed: **Dec. 17, 2021**

Related U.S. Application Data

(63) Continuation-in-part of application No. 17/542,290, filed on Dec. 3, 2021.

(60) Provisional application No. 63/237,050, filed on Aug. 25, 2021, provisional application No. 63/182,465, filed on Apr. 30, 2021, provisional application No. 63/187,932, filed on May 12, 2021, provisional application No. 63/191,897, filed on May 21, 2021, provisional application No. 63/208,503, filed on Jun. 9, 2021.

Publication Classification

(51) **Int. Cl.**

H03H 9/02	(2006.01)
H03H 3/02	(2006.01)
H03H 9/13	(2006.01)
H03H 9/17	(2006.01)
H03H 9/56	(2006.01)

(52) **U.S. Cl.**

CPC ***H03H 9/02228*** (2013.01); ***H03H 3/02*** (2013.01); ***H03H 9/02031*** (2013.01); ***H03H 9/132*** (2013.01); ***H03H 9/174*** (2013.01); ***H03H 9/176*** (2013.01); ***H03H 9/562*** (2013.01); ***H03H 9/564*** (2013.01); *H03H 2003/023* (2013.01)

(57) **ABSTRACT**

Acoustic resonators, filters, and methods. An acoustic resonator includes a substrate, a piezoelectric plate, and a diaphragm including a portion of the piezoelectric plate spanning a cavity in a substrate. An interdigital transducer (IDT) on a front surface of the piezoelectric plate includes first and second sets of interleaved interdigital transducer (IDT) fingers extending from first and second busbars respectively. The interleaved IDT fingers extend onto the diaphragm. Overlapping portions of the interleaved IDT fingers define an aperture of the acoustic resonator. First and second dielectric strips are on the front surface of the piezoelectric plate. Each dielectric strip has a first portion under the IDT fingers in a respective margin of the aperture and a second portion extending into a gap between the respective margin and the respective busbar.

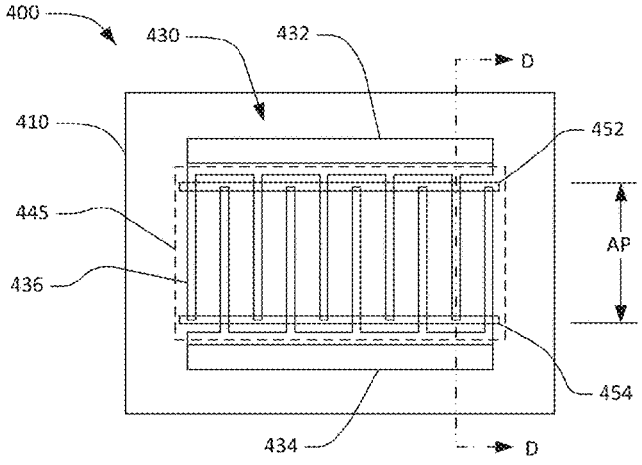

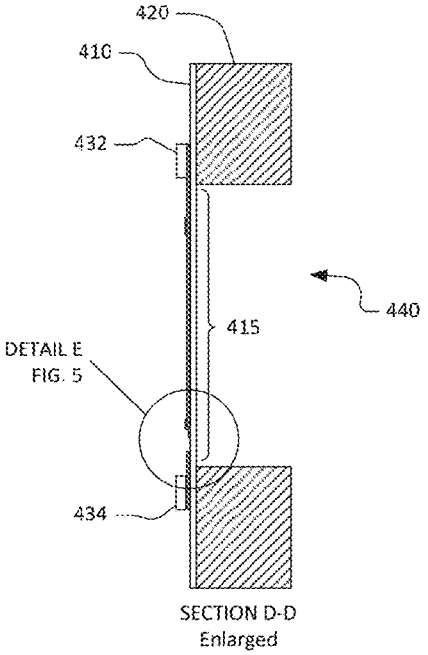

©2021 RESONANT INC.