US 20220369437A1

(19) United States

(12) Patent Application Publication

Diana et al.

(10) Pub. No.: US 2022/0369437 A1

(43) Pub. Date: Nov. 17, 2022

(54) **METHOD FOR WIDE-RANGE CCT TUNING THAT FOLLOWS THE BLACK BODY LINE USING TWO INDEPENDENTLY CONTROLLED CURRENT CHANNELS AND THREE CCTS**

(71) Applicant: **Lumileds LLC**, San Jose, CA (US)

(72) Inventors: **Frederic Stephane Diana**, Santa Clara, CA (US); **Yifeng Qiu**, San Jose, CA (US)

(21) Appl. No.: **17/870,557**

(22) Filed: **Jul. 21, 2022**

Related U.S. Application Data

(63) Continuation of application No. 16/895,780, filed on Jun. 8, 2020, now Pat. No. 11,432,382, which is a continuation of application No. 15/640,549, filed on Jul. 2, 2017, now Pat. No. 10,716,183.

Publication Classification

(51) **Int. Cl.**

H05B 45/20	(2006.01)
H05B 45/24	(2006.01)
H05B 45/46	(2006.01)

(52) **U.S. Cl.**

CPC ***H05B 45/20*** (2020.01); ***H05B 45/24*** (2020.01); ***H05B 45/46*** (2020.01)

(57) **ABSTRACT**
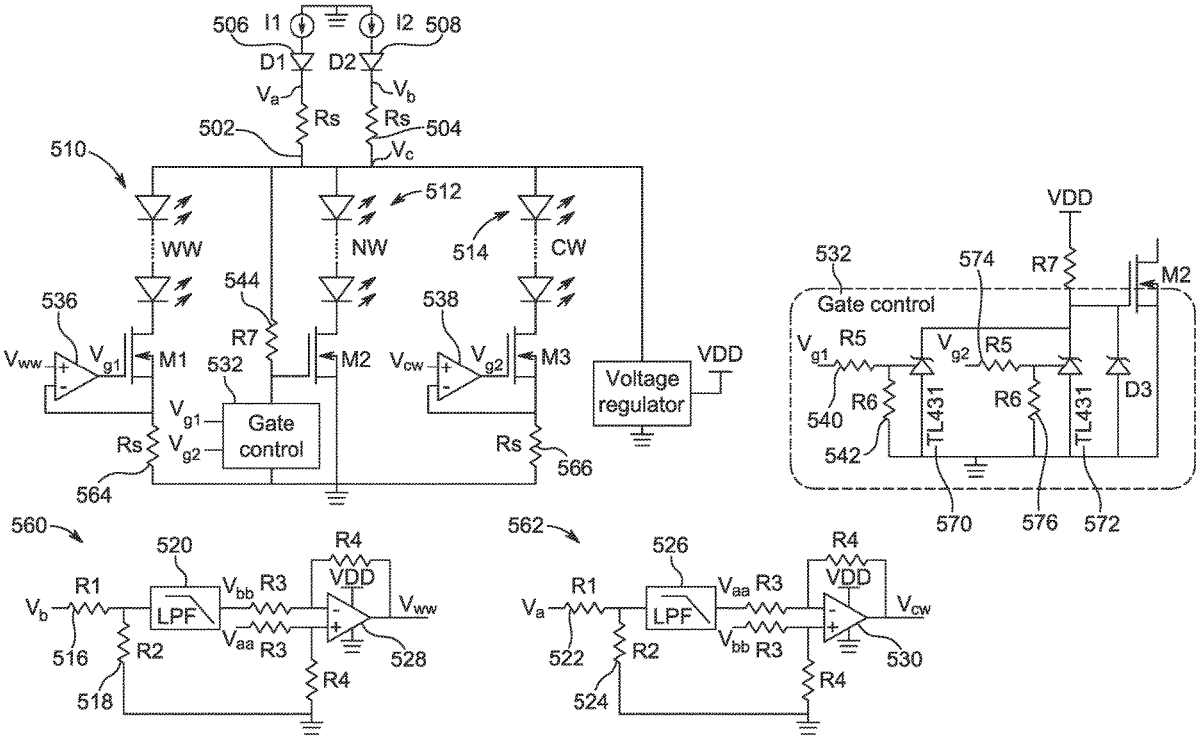
An interface currents channeling circuit may be used to convert two current channels of a conventional two-channel driver into three driving currents for the three strings of LEDs. By doing so, the same two channel driver can be used for applications requiring just two LED arrays as well as three LED arrays.