US 20240244885A1

(19) United States
(12) Patent Application Publication
SAKUMA et al.
(10) Pub. No.: US 2024/0244885 A1
(43) Pub. Date: Jul. 18, 2024

(54) DISPLAY DEVICE AND METHOD FOR MANUFACTURING DISPLAY DEVICE

(71) Applicant: **SHARP KABUSHIKI KAISHA**, Sakai City, Osaka (JP)

(72) Inventors: **JUN SAKUMA**, Sakai City, Osaka (JP); **YASUSHI ASAOKA**, Sakai City, Osaka (JP)

(21) Appl. No.: **18/288,288**

(22) PCT Filed: **Jun. 3, 2021**

(86) PCT No.: **PCT/JP2021/021199**

§ 371 (c)(1),
(2) Date: **Oct. 25, 2023**

Publication Classification

(51) **Int. Cl.**
H10K 59/122 (2006.01)
H10K 59/12 (2006.01)

(52) **U.S. Cl.**
CPC *H10K 59/122* (2023.02); *H10K 59/1201* (2023.02)

(57) **ABSTRACT**
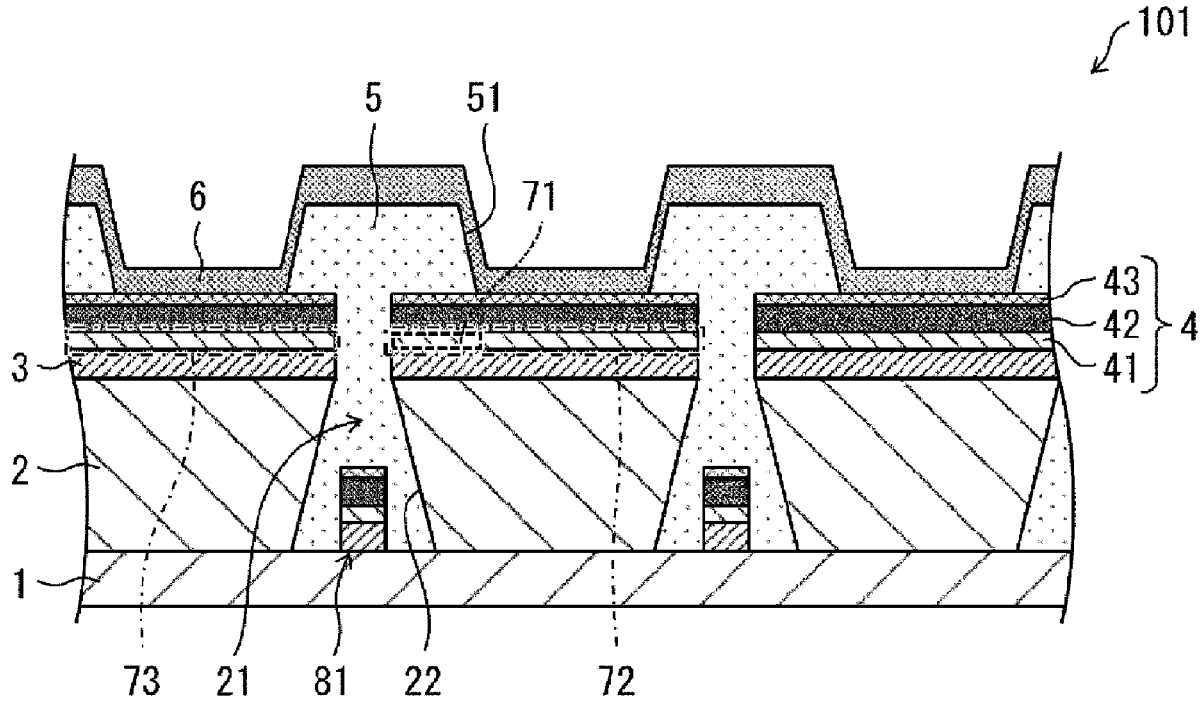
A hole transport layer serving as a target layer includes a part of a region formed between a plurality of lower electrodes and a partition, and includes a first portion and a second portion across at least one of a non-formation portion of the target layer and a region where the target layer is thinner than the target layer on the plurality of lower electrodes in the reverse tapered portion.