US 20240213831A1

(19) United States
(12) Patent Application Publication
KATSUYAMA

(10) Pub. No.: US 2024/0213831 A1
(43) Pub. Date: Jun. 27, 2024

(54) **ROTARY ELECTRIC MACHINE**

(71) Applicant: **Mitsubishi Electric Corporation**, Tokyo (JP)

(72) Inventor: **Ryuto KATSUYAMA**, Tokyo (JP)

(73) Assignee: **Mitsubishi Electric Corporation**, Tokyo (JP)

(21) Appl. No.: **18/506,728**

(22) Filed: **Nov. 10, 2023**

(30) **Foreign Application Priority Data**

Dec. 23, 2022 (JP) ..... 2022-206331

**Publication Classification**

(51) **Int. Cl.**

| | |
|---|---|
| ***H02K 1/20*** | (2006.01) |
| ***H02K 9/19*** | (2006.01) |
| ***H02K 11/33*** | (2006.01) |

(52) **U.S. Cl.**

CPC ..... ***H02K 1/20*** (2013.01); ***H02K 9/19*** (2013.01); ***H02K 11/33*** (2016.01)

(57) **ABSTRACT**

To provide a rotary electric machine that the cooling performance of the winding part on the axial direction one side with connection can be higher than the cooling performance of the winding part on the axial direction other side with no connection. A motor cooling passage provided in an outer circumferential part of the stator is provided with circumferential direction parts that is provided with an one side circumferential direction passage and an other side circumferential direction passage; and circumferential direction parts that is provided with an axial direction passage, wherein a length of a part of the one side circumferential direction passage which exists on an upstream side of a center position of a total length of the motor cooling passage is longer than a length of a part of the other side circumferential direction passage which exists on the upstream side of the center position.
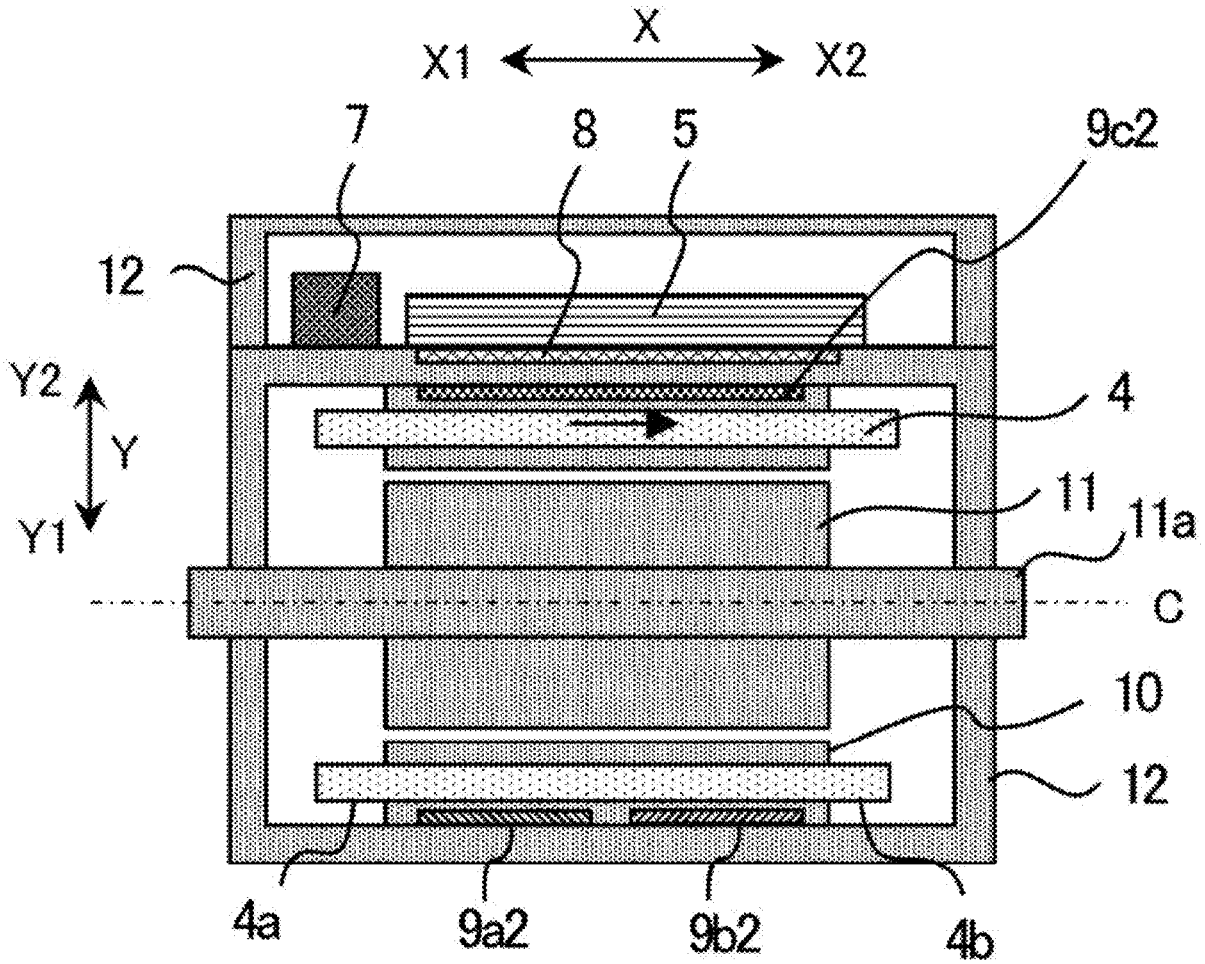
D1-D1