US 20240213156A1

(19) United States
(12) Patent Application Publication
DARMAWIKARTA et al.
(10) Pub. No.: US 2024/0213156 A1
(43) Pub. Date: Jun. 27, 2024

(54) **LIQUID METAL WELLS FOR INTERCONNECT ARCHITECTURES**

(71) Applicant: **Intel Corporation**, Santa Clara, CA (US)

(72) Inventors: **Kristof DARMAWIKARTA**, Chandler, AZ (US); **Srinivas V. PIETAMBARAM**, Chandler, AZ (US); **Gang DUAN**, Chandler, AZ (US); **Tarek A. IBRAHIM**, Mesa, AZ (US); **Aaron GARELICK**, Chandler, AZ (US); **Srikant NEKKANTY**, Chandler, AZ (US); **Ravindranath V. MAHAJAN**, Chandler, AZ (US); **Rahul N. MANEPALLI**, Chandler, AZ (US)

(21) Appl. No.: **18/089,491**

(22) Filed: **Dec. 27, 2022**

Publication Classification

(51) **Int. Cl.**

H01L 23/532	(2006.01)
H01L 23/00	(2006.01)
H01L 23/15	(2006.01)
H01L 23/498	(2006.01)
H01L 23/522	(2006.01)
H01L 23/535	(2006.01)
H01L 23/64	(2006.01)
H01L 25/065	(2006.01)

(52) **U.S. Cl.**

CPC ***H01L 23/53209*** (2013.01); ***H01L 23/15*** (2013.01); ***H01L 23/49816*** (2013.01); ***H01L 23/5226*** (2013.01); ***H01L 23/535*** (2013.01); ***H01L 23/642*** (2013.01); ***H01L 24/05*** (2013.01); ***H01L 24/29*** (2013.01); ***H01L 25/0655*** (2013.01); *H01L 2224/04026* (2013.01); *H01L 2224/05567* (2013.01); *H01L 2224/29007* (2013.01); *H01L 2224/29021* (2013.01); *H01L 2224/29101* (2013.01); *H01L 2924/1436* (2013.01); *H01L 2924/15321* (2013.01)

(57) **ABSTRACT**
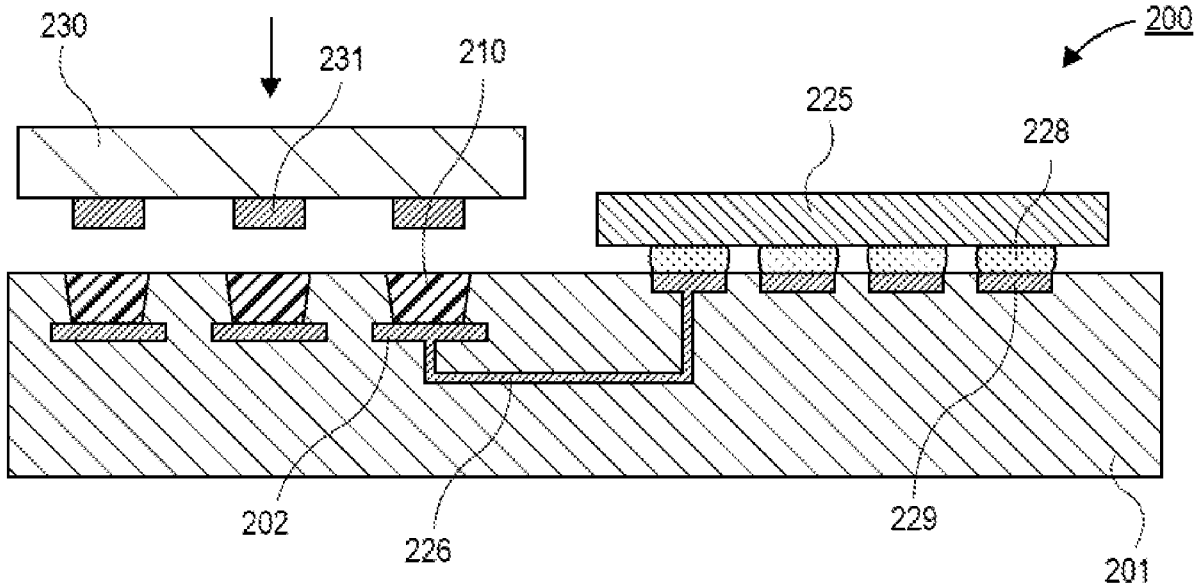
Embodiments disclosed herein include package substrates. In an embodiment, the package substrate comprises a core and buildup layers over the core. In an embodiment, a pad is provided on the buildup layers. In an embodiment, a liquid metal well is over the pad.