US 20230231283A1

(19) United States
(12) Patent Application Publication
LEE et al.
(10) Pub. No.: US 2023/0231283 A1
(43) Pub. Date: Jul. 20, 2023

(54) **SECONDARY BATTERY**

(71) Applicant: **SAMSUNG SDI CO., LTD.**, Yongin-si (KR)

(72) Inventors: **Mi Sun LEE**, Yongin-si (KR); **Dae Sung RO**, Yongin-si (KR); **Dong Hui KIM**, Yongin-si (KR)

(21) Appl. No.: **18/095,566**

(22) Filed: **Jan. 11, 2023**

(30) **Foreign Application Priority Data**

Jan. 14, 2022 (KR) 10-2022-0005835

Publication Classification

(51) **Int. Cl.**
H01M 50/533 (2006.01)
H01M 50/105 (2006.01)
H01M 50/178 (2006.01)
H01M 50/557 (2006.01)

(52) **U.S. Cl.**
CPC ***H01M 50/533*** (2021.01); ***H01M 50/105*** (2021.01); ***H01M 50/178*** (2021.01); ***H01M 50/557*** (2021.01)

(57) **ABSTRACT**
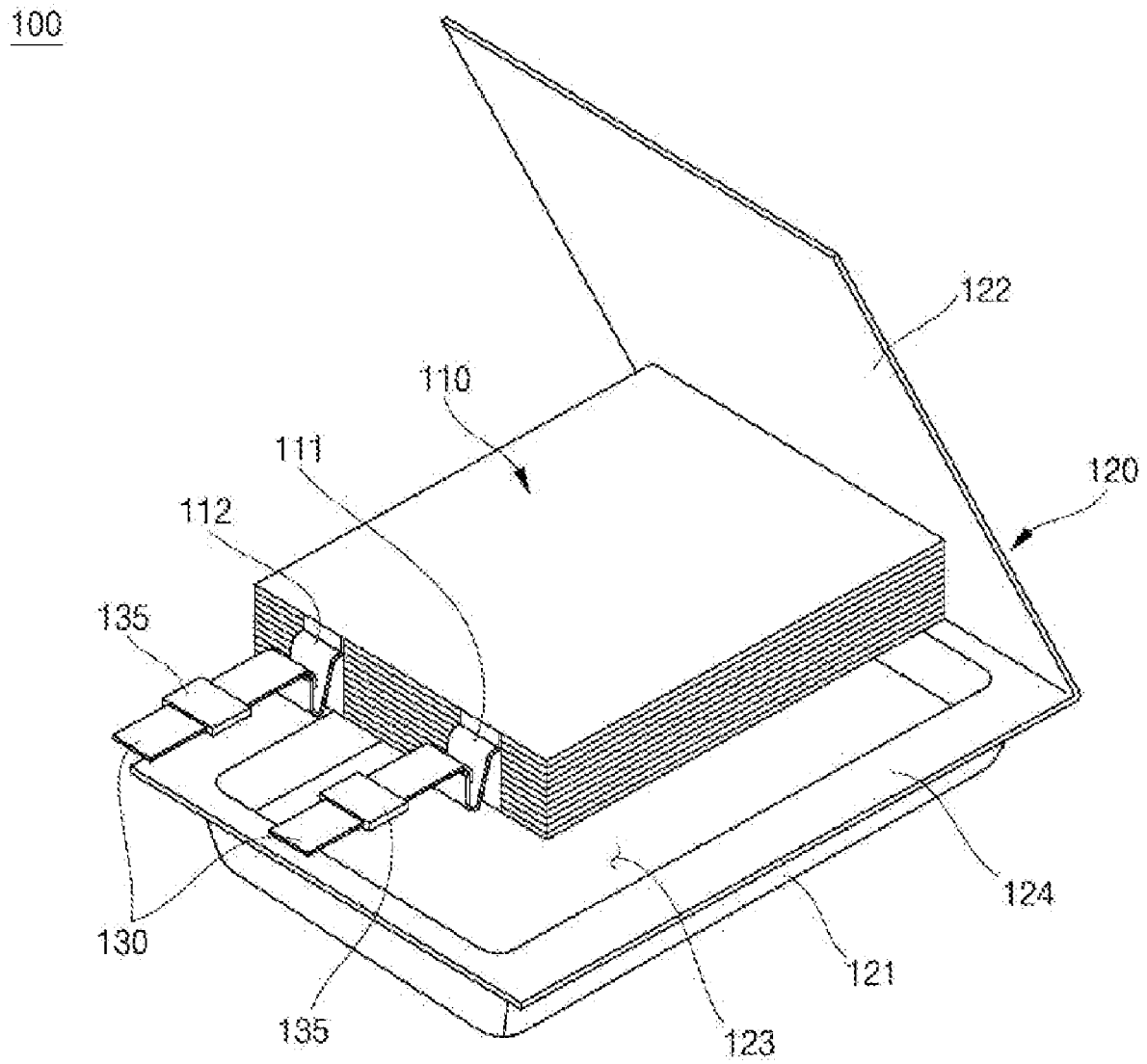
A secondary battery includes an electrode assembly including a current collection tab protruding to one side; a case including a main body having an accommodating part accommodating the electrode assembly, and a cover covering the main body; and an electrode lead electrically connected to the current collection tab and drawn out of the case, wherein the current collection tab is bent twice, and a length of the current collection tab is twice a thickness of the electrode assembly.