US 20220385272A1

(19) United States
(12) Patent Application Publication
Sun et al.
(10) Pub. No.: US 2022/0385272 A1
(43) Pub. Date: Dec. 1, 2022

(54) **SWITCHABLE ACOUSTIC WAVE FILTER**

(71) Applicant: **Skyworks Solutions, Inc.**, Irvine, CA (US)

(72) Inventors: **Weimin Sun**, Santa Rosa Valley, CA (US); **Hai H. Ta**, San Diego, CA (US); **David Richard Pehlke**, Westlake Village, CA (US)

(21) Appl. No.: **17/664,729**

(22) Filed: **May 24, 2022**

Related U.S. Application Data

(60) Provisional application No. 63/208,620, filed on Jun. 9, 2021, provisional application No. 63/208,600, filed on Jun. 9, 2021, provisional application No. 63/194,760, filed on May 28, 2021.

Publication Classification

(51) **Int. Cl.**

H03H 9/64	(2006.01)
H03H 9/02	(2006.01)
H03H 9/17	(2006.01)
H03H 9/72	(2006.01)
H01Q 9/04	(2006.01)

(52) **U.S. Cl.**

CPC ***H03H 9/6406*** (2013.01); ***H03H 9/02007*** (2013.01); ***H03H 9/17*** (2013.01); ***H03H 9/725*** (2013.01); ***H01Q 9/04*** (2013.01)

(57) **ABSTRACT**
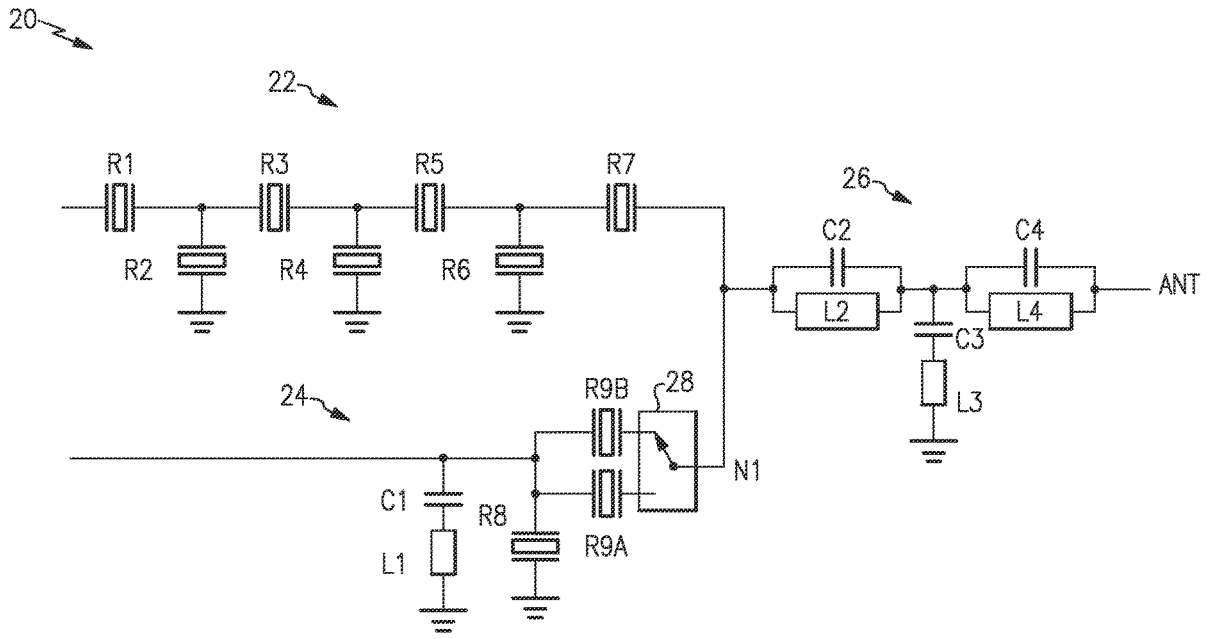
Aspects of this disclosure relate to a switchable acoustic wave filter. The switchable acoustic wave filter can include a switch configured to electrically connect an acoustic wave resonator to a node in a first state and to electrically isolate the acoustic wave resonator from the node in a second state. The switchable acoustic wave filter can filter a radio frequency signal with at least the acoustic wave resonator and a second acoustic wave resonator in the first state. The switchable acoustic wave filter can filter the radio frequency signal with at least the second acoustic wave resonator in the first state. Related multiplexers, radio frequency systems, wireless communication devices, and methods are also disclosed.