US 20220360223A1

(19) United States

(12) Patent Application Publication

(10) Pub. No.: US 2022/0360223 A1

(43) Pub. Date: Nov. 10, 2022

Kultran et al.

(54) **SYSTEMS AND METHODS FOR DYNAMICALLY ADJUSTING PARAMETERS OF AN ACTIVE ELECTRICAL DEVICE**

(71) Applicant: **Epirus, Inc.**, Hawthorne, CA (US)

(72) Inventors: **Denpol Kultran**, Torrance, CA (US); **Harry Bourne Marr, JR.**, Manhattan Beach, CA (US); **Ryan Scott Ligon**, Los Angeles, CA (US); **Steven Deward Gray**, Jacksonville, FL (US); **Jonathan David Loughran**, Torrance, CA (US)

(21) Appl. No.: **17/661,893**

(22) Filed: **May 3, 2022**

Related U.S. Application Data

(60) Provisional application No. 63/184,199, filed on May 4, 2021, provisional application No. 63/184,658, filed on May 5, 2021.

Publication Classification

(51) **Int. Cl.**

H03F 1/02	(2006.01)
H03F 3/193	(2006.01)
H03F 3/21	(2006.01)

(52) **U.S. Cl.**

CPC ***H03F 1/0211*** (2013.01); ***H03F 3/193*** (2013.01); ***H03F 3/21*** (2013.01); *H03F 2200/522* (2013.01)

(57) **ABSTRACT**
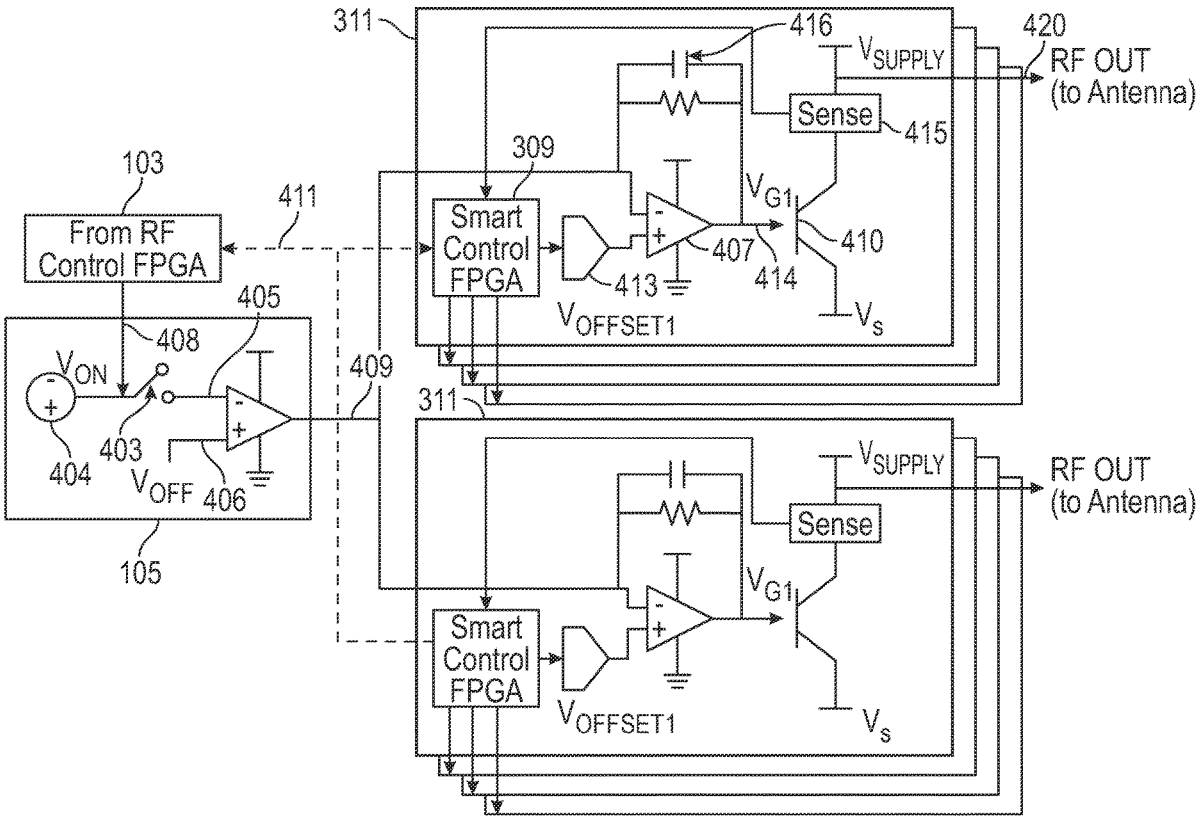
A system for adjusting various parameters of an active electronic component based on sensed characteristics of the active electronic component and/or characteristics of the input or output power.