US 20240224459A1

(19) United States

(12) Patent Application Publication

(10) Pub. No.: US 2024/0224459 A1

(43) Pub. Date: Jul. 4, 2024

Shen et al.

(54) **ELECTRONIC DEVICE AND POWER SYSTEM**

(71) Applicant: **Delta Electronics, Inc.**, Taoyuan City (TW)

(72) Inventors: **Yu-Chieh Shen**, Taoyuan City (TW); **Chen-Chiang Su**, Taoyuan City (TW); **Yung-Chun Lo**, Taoyuan City (TW); **Yen-Ting Chen**, Taoyuan City (TW); **Ching-Jung Lin**, Taoyuan City (TW)

(21) Appl. No.: **18/517,233**

(22) Filed: **Nov. 22, 2023**

Related U.S. Application Data

(60) Provisional application No. 63/436,203, filed on Dec. 30, 2022.

(30) **Foreign Application Priority Data**

Jul. 6, 2023 (CN) 202310825703.7

Publication Classification

(51) **Int. Cl.**
H05K 7/14 (2006.01)
H05K 7/20 (2006.01)

(52) **U.S. Cl.**
CPC ***H05K 7/1492*** (2013.01); ***H05K 7/20236*** (2013.01); ***H05K 7/20927*** (2013.01)

(57) **ABSTRACT**
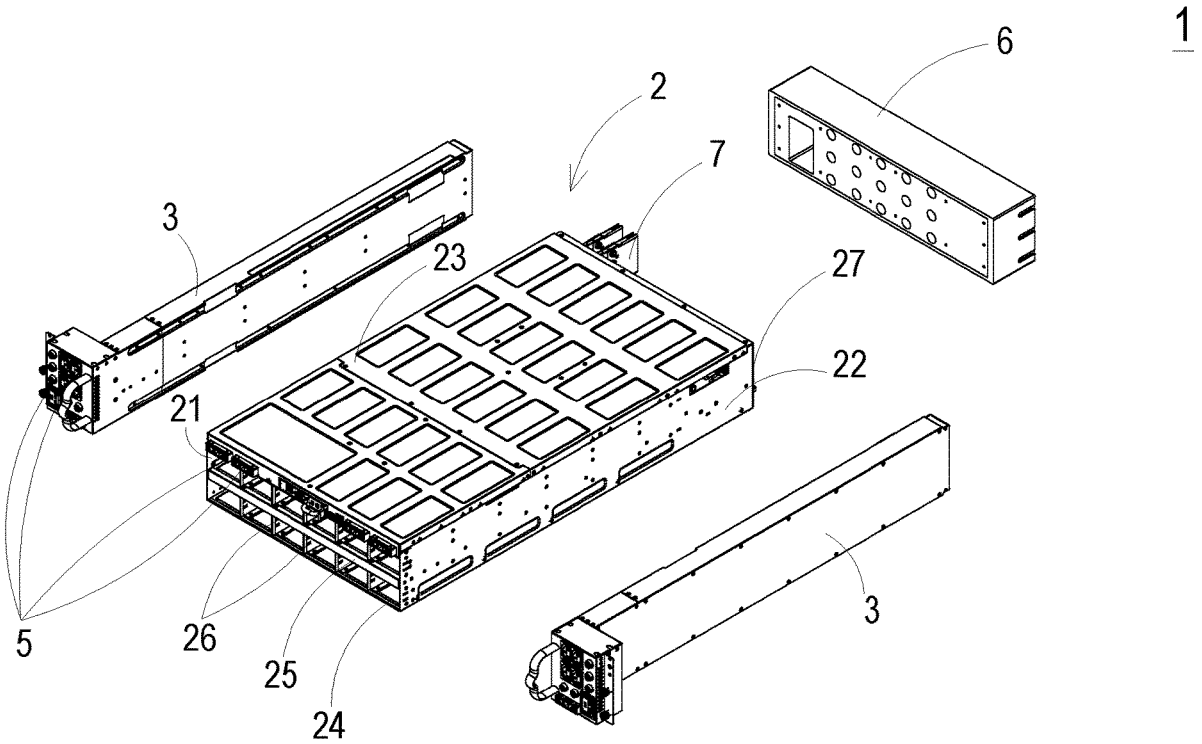
An electronic device and a power system are provided. The electronic device includes a shelf casing and a filling component module. The shelf casing includes a plurality of side walls disposed around in sequence. The filling component module is disposed on the exterior of the shelf casing and adjacent to at least one of the plurality of side walls.