US 20230231383A1

(19) United States
(12) Patent Application Publication
PABON OSPINA et al.

(10) Pub. No.: US 2023/0231383 A1
(43) Pub. Date: Jul. 20, 2023

(54) ELECTRICAL POWER SYSTEM

(71) Applicant: **Fraunhofer-Gesellschaft zur Förderung der Angewandten Forschung E.V.**, München (DE)

(72) Inventors: **Luis David PABON OSPINA**, Kassel (DE); **Thierry VAN CUTSEM**, Liège (BE)

(21) Appl. No.: **18/007,124**

(22) PCT Filed: **Jul. 8, 2021**

(86) PCT No.: **PCT/EP2021/068968**

§ 371 (c)(1),
(2) Date: **Jan. 27, 2023**

(30) **Foreign Application Priority Data**

Jul. 31, 2020 (DE) 10 2020 209 715.1

Publication Classification

(51) **Int. Cl.**
H02J 3/16 (2006.01)
H02J 3/00 (2006.01)

(52) **U.S. Cl.**
CPC ... ***H02J 3/16*** (2013.01); ***H02J 3/001*** (2020.01)

(57) **ABSTRACT**
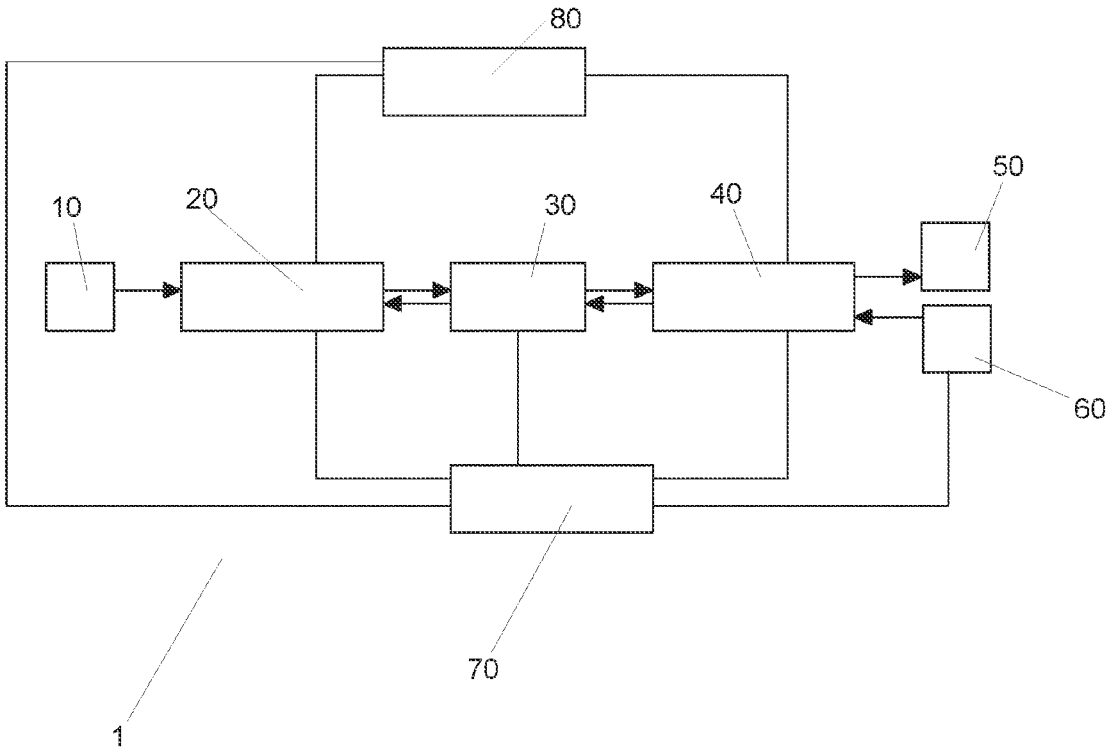
Disclosed is an electrical power system having a transmission system with a first voltage, a distribution network with a second voltage, and a coupling unit having a coupling ratio, and a distributed generation unit DGU to generate the electric power and be in a communication with the distribution network. The system may also have a control unit to control the coupling unit and the DGU in an emergency operating mode to bring and/or to keep the value of the first voltage between a first threshold and a third threshold, and/or the value of the second voltage between a second threshold and a fourth threshold, the first threshold corresponding to the value of the first voltage at the time of entry into the emergency operating mode and the second threshold corresponding to the value of the second voltage at the time of entry into the emergency operating mode.