US 20220393667A1

(19) United States
(12) Patent Application Publication
SHEALY et al.
(10) Pub. No.: US 2022/0393667 A1
(43) Pub. Date: Dec. 8, 2022

(54) **ACOUSTIC WAVE RESONATOR RF FILTER CIRCUIT DEVICE**

(71) Applicant: **Akoustis, Inc.**, Huntersville, NC (US)

(72) Inventors: **Jeffrey B. SHEALY**, Cornelius, NC (US); **Michael D. HODGE**, Belmont, NC (US); **Rohan W. HOULDEN**, Oak Ridge, NC (US); **Mary WINTERS**, Webster, NY (US); **Ramakrishna VETURY**, Charlotte, NC (US); **Ya SHEN**, Huntersville, NC (US); **David M. AICHELE**, Huntersville, NC (US)

(21) Appl. No.: **17/888,164**

(22) Filed: **Aug. 15, 2022**

Related U.S. Application Data

(63) Continuation of application No. 17/558,147, filed on Dec. 21, 2021, now Pat. No. 11,456,723, which is a continuation of application No. 17/306,132, filed on May 3, 2021, which is a continuation-in-part of application No. 16/828,675, filed on Mar. 24, 2020, which is a continuation-in-part of application No. 16/707,885, filed on Dec. 9, 2019, which is a continuation-in-part of application No. 16/290,703, filed on Mar. 1, 2019, now Pat. No. 10,979,026, which is a continuation-in-part of application No. 16/175,650, filed on Oct. 30, 2018, now Pat. No. 10,979,025, which is a continuation-in-part of application No. 16/019,267, filed on Jun. 26, 2018, now Pat. No. 10,979,022, which is a continuation-in-part of application No. 15/784,919, filed on Oct. 16, 2017, now Pat. No. 10,355,659, which is a continuation-in-part of application No. 15/068,510, filed on Mar. 11, 2016, now Pat. No. 10,217,930, said application No. 17/306,132 is a continuation-in-part of application No. 16/514,717, filed on Jul. 17, 2019, now Pat. No. 11,418,169, which is a continuation-in-part of application No. 16/290,703, filed on Mar. 1, 2019, now Pat. No. 10,979,026, which is a continuation-in-part of application No. 16/175,650, filed on Oct. 30, 2018, now Pat. No. 10,979,025, which is a continuation-in-part of application No. 16/019,267, filed on Jun. 26, 2018, now Pat. No. 10,979,022, which is a continuation-in-part of application No. 15/784,919, filed on Oct. 16, 2017, now Pat. No. 10,355,659, which is a continuation-in-part of application No. 15/068,510, filed on Mar. 11, 2016, now Pat. No. 10,217,930, said application No. 17/306,132 is a continuation-in-part of application No. 16/541,076, filed on Aug. 14, 2019, now Pat. No.

(Continued)

Publication Classification

(51) **Int. Cl.**

H03H 9/60	(2006.01)
H03H 9/13	(2006.01)
H03H 9/02	(2006.01)
H03H 9/205	(2006.01)

(52) **U.S. Cl.**

CPC ***H03H 9/605*** (2013.01); ***H03H 9/131*** (2013.01); ***H03H 9/02015*** (2013.01); ***H03H 9/205*** (2013.01)

(57) **ABSTRACT**
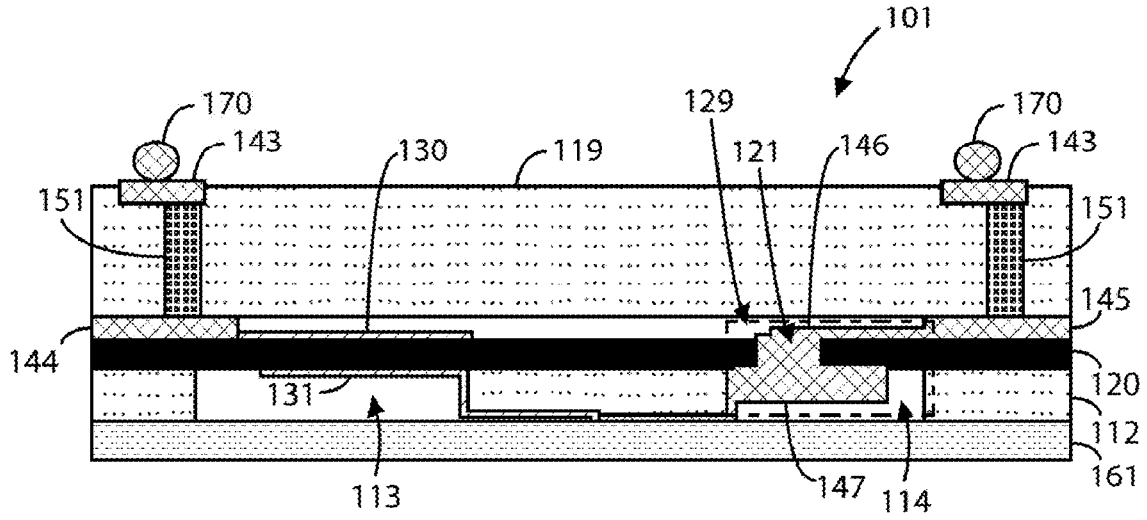
An RF circuit device using modified lattice, lattice, and ladder circuit topologies. The devices can include a plurality of resonator devices and a plurality of resonator devices. In the ladder topology, the resonator devices are connected in series from an input port to an output port while shunt resonator devices are coupled the nodes between the resonator devices. In the lattice topology, a top and a bottom serial configurations each includes a pair of resonator devices that are coupled to differential input and output ports. A pair of shunt resonators is cross-coupled between each pair of a top serial configuration resonator and a bottom serial configuration resonator. The modified lattice topology adds baluns or inductor devices between top and bottom nodes of the top and bottom serial configurations of the lattice configuration. These topologies may be applied using single crystal or polycrystalline bulk acoustic wave (BAW) resonators.