US 20230232662A1

(19) United States
(12) Patent Application Publication
Choi et al.
(10) Pub. No.: US 2023/0232662 A1
(43) Pub. Date: Jul. 20, 2023

(54) **DISPLAY APPARATUS AND METHOD OF MANUFACTURING THE SAME**

(71) Applicant: **SAMSUNG DISPLAY CO., LTD.**, Yongin-si (KR)

(72) Inventors: **Wonwoo Choi**, Yongin-si (KR); **Yoonah Choi**, Yongin-si (KR); **Donghun Nam**, Yongin-si (KR)

(21) Appl. No.: **17/976,301**

(22) Filed: **Oct. 28, 2022**

(30) **Foreign Application Priority Data**

Jan. 20, 2022 (KR) 10-2022-0008522

Publication Classification

(51) **Int. Cl.**

H01L 27/32	(2006.01)
H01L 27/12	(2006.01)
H01L 51/56	(2006.01)
H01L 51/52	(2006.01)

(52) **U.S. Cl.**

CPC ***H01L 27/3262*** (2013.01); ***H01L 27/1225*** (2013.01); ***H01L 51/56*** (2013.01); ***H01L 27/3276*** (2013.01); ***H01L 51/5253*** (2013.01); *H01L 2227/323* (2013.01)

(57) **ABSTRACT**
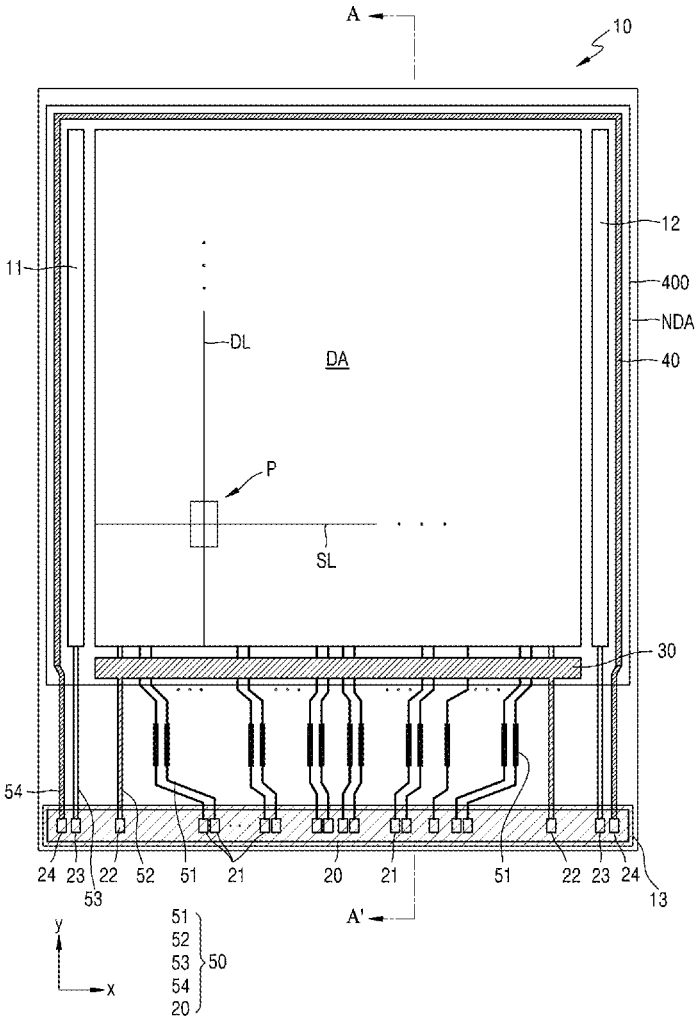
A display apparatus includes a substrate, a first semiconductor layer disposed on the substrate, a second semiconductor layer disposed on the first semiconductor layer, an interlayer insulating layer disposed on the second semiconductor layer and including a plurality of inorganic insulating layers, a source electrode or a drain electrode disposed on the interlayer insulating layer and respectively connected to the first semiconductor layer or the second semiconductor layer, and an organic light emitting element connected to the source electrode or the drain electrode, where the plurality of inorganic insulating layers include an oxide layer, a first nitride layer disposed on the oxide layer and having a first density, and a second nitride layer disposed on the first nitride layer and having a second density lower than the first density.