US 20230231266A1

(19) United States

(12) Patent Application Publication

JEON et al.

(10) Pub. No.: US 2023/0231266 A1

(43) Pub. Date: Jul. 20, 2023

(54) **BATTERY MODULE AND BATTERY PACK HAVING BATTERY MODULE**

(71) Applicant: **SK On Co., Ltd.**, Seoul (KR)

(72) Inventors: **Hae Ryong JEON**, Daejeon (KR); **Kang Gu LEE**, Daejeon (KR)

(21) Appl. No.: **18/095,533**

(22) Filed: **Jan. 11, 2023**

(30) **Foreign Application Priority Data**

Jan. 20, 2022 (KR) 10-2022-0008697

Publication Classification

(51) **Int. Cl.**

H01M 50/383	(2006.01)
H01M 50/213	(2006.01)
H01M 50/271	(2006.01)
H01M 10/658	(2006.01)
H01M 50/107	(2006.01)
H01M 50/503	(2006.01)
H01M 50/588	(2006.01)
H01M 50/593	(2006.01)
H01M 50/258	(2006.01)
H01M 10/643	(2006.01)

(52) **U.S. Cl.**

CPC ***H01M 50/383*** (2021.01); ***H01M 50/213*** (2021.01); ***H01M 50/271*** (2021.01); ***H01M 10/658*** (2015.04); ***H01M 50/107*** (2021.01); ***H01M 50/503*** (2021.01); ***H01M 50/588*** (2021.01); ***H01M 50/593*** (2021.01); ***H01M 50/258*** (2021.01); ***H01M 10/643*** (2015.04)

(57) **ABSTRACT**
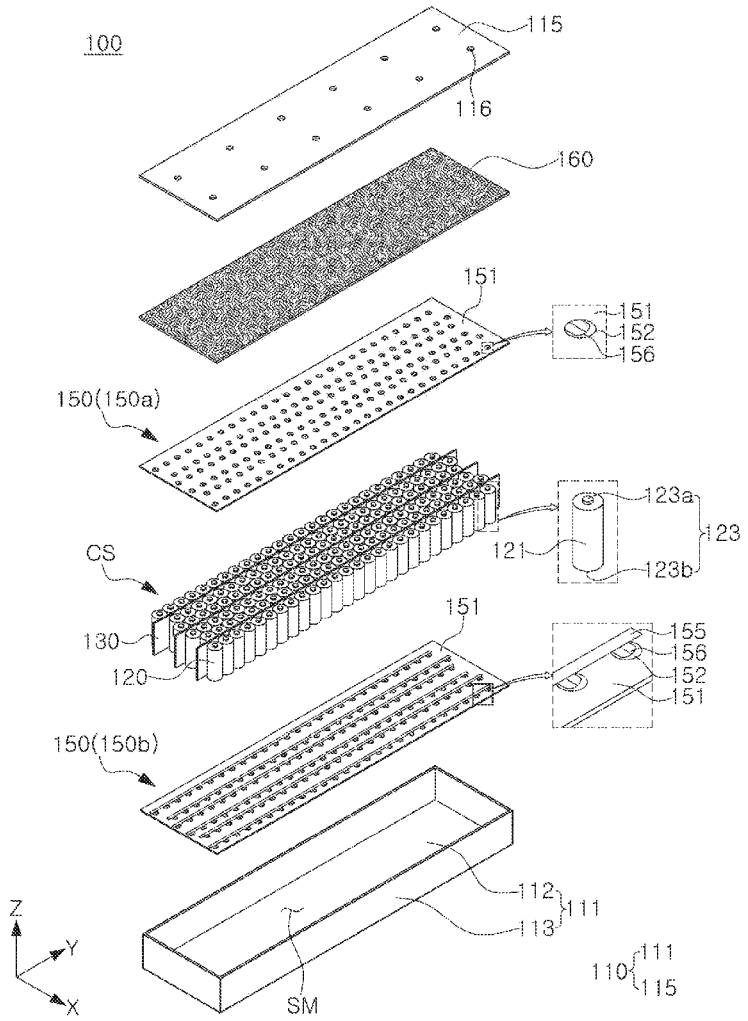
A battery module includes a cell assembly including a plurality of battery cells, and a module housing having an arrangement space for accommodating the cell assembly and a cover plate covering a top surface of the cell assembly. The cover plate has at least one discharge hole for discharging gas generated in the cell assembly. A blocking member is disposed between the top surface of the cell assembly and the cover plate to block flame or a combustion material from being discharged externally of the module housing through the discharge hole.