US 20220368169A1

(19) United States

(12) Patent Application Publication

JANG

(10) Pub. No.: US 2022/0368169 A1

(43) Pub. Date: Nov. 17, 2022

(54) **MAGNETIC FIELD SHIELDING SHEET AND MANUFACTURING METHOD THEREOF**

(71) Applicant: **AMOSENSE CO.,LTD.**, Cheonan-si, Chungcheongnam-do (KR)

(72) Inventor: **Kil Jae JANG**, Cheonan-si, Chungcheongnam-do (KR)

(73) Assignee: **AMOSENSE CO.,LTD.**, Cheonan-si, Chungcheongnam-do (KR)

(21) Appl. No.: **17/620,285**

(22) PCT Filed: **Jun. 17, 2020**

(86) PCT No.: **PCT/KR2020/007848**

§ 371 (c)(1),
(2) Date: **Dec. 17, 2021**

(30) **Foreign Application Priority Data**

Jun. 18, 2019 (KR) 10-2019-0072105
Jun. 18, 2019 (KR) 10-2019-0072106
Jun. 17, 2020 (KR) 10-2020-0073631

Publication Classification

(51) **Int. Cl.**

H02J 50/70	(2006.01)
H05K 9/00	(2006.01)
H02J 50/20	(2006.01)
H01Q 1/52	(2006.01)
H04B 5/00	(2006.01)

(52) **U.S. Cl.**

CPC ***H02J 50/70*** (2016.02); ***H05K 9/0075*** (2013.01); ***H02J 50/20*** (2016.02); ***H01Q 1/526*** (2013.01); ***H04B 5/0037*** (2013.01)

(57) **ABSTRACT**
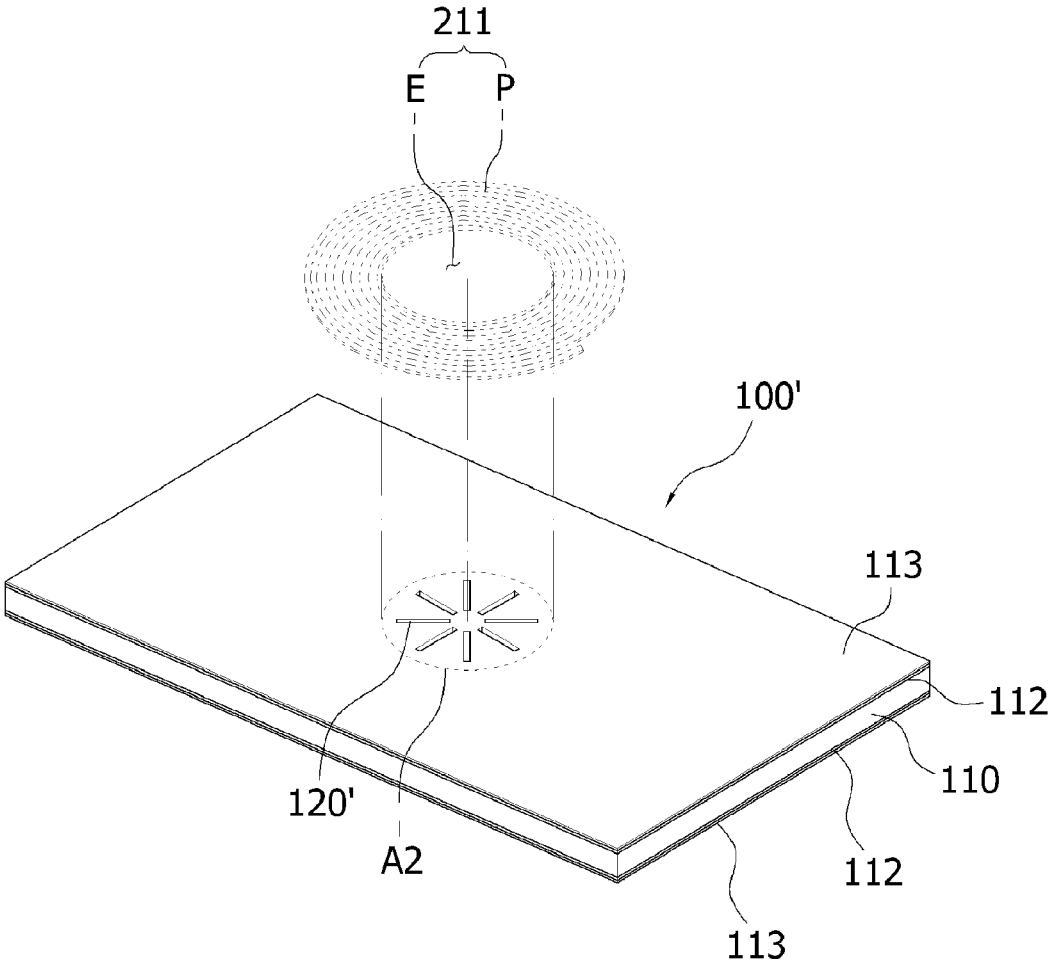
Provided is a magnetic field shielding sheet. A magnetic field shielding sheet according to an exemplary embodiment of the present invention is a magnetic field shielding sheet for an antenna, which includes a hollow portion having a predetermined area in a central portion thereof and a pattern portion configured to surround the hollow portion, includes a sheet body formed as a ribbon sheet including at least one selected from an amorphous alloy and a nanocrystalline alloy, a plurality of through-portions formed in a region of the sheet body corresponding to the pattern portion, and a plurality of cracks formed to extend from the through-portions.