US 20240237243A1

(19) United States
(12) Patent Application Publication
MIN

(10) Pub. No.: US 2024/0237243 A1
(43) Pub. Date: Jul. 11, 2024

(54) **DISPLAY DEVICE**

(71) Applicant: **Samsung Display Co., Ltd.**, Yongin-si (KR)

(72) Inventor: **Myungan MIN**, Cheonan-si (KR)

(73) Assignee: **Samsung Display Co., Ltd.**, Yongin-si (KR)

(21) Appl. No.: **18/617,830**

(22) Filed: **Mar. 27, 2024**

Related U.S. Application Data

(62) Division of application No. 17/683,907, filed on Mar. 1, 2022, now Pat. No. 11,963,319.

(30) **Foreign Application Priority Data**

Jun. 7, 2021 (KR) 10-2021-0073726

Publication Classification

(51) **Int. Cl.**
H05K 5/02 (2006.01)
H05K 5/00 (2006.01)

(52) **U.S. Cl.**
CPC ***H05K 5/0217*** (2013.01); ***H05K 5/0017*** (2013.01)

(57) **ABSTRACT**
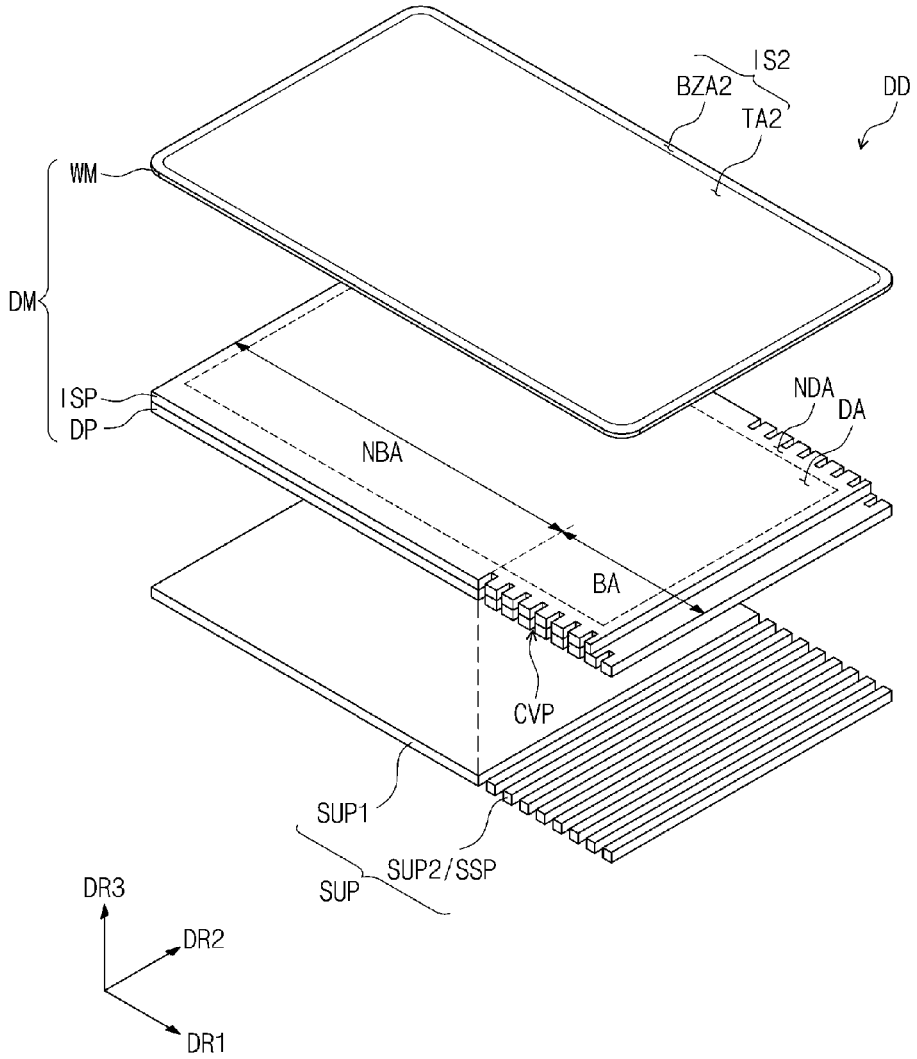
Disclosed is a display device comprising a display panel, and a support layer disposed under the display panel. The display panel includes a display area that displays an image in a bending area and in a non-bending area, and a non-display area disposed adjacent to the display area in the bending area and the non-bending area. The display device is bend in the bending area during a sliding motion and not bent in the non-bending area adjacent to the bending area during the sliding motion. The non-display area that is disposed the bending area includes pattern areas and non-pattern areas adjacent to the pattern areas. Each of the pattern areas includes a concave portion and a remaining portion.