US 20220385283A1

(19) United States

(12) Patent Application Publication

(10) Pub. No.: US 2022/0385283 A1

(43) Pub. Date: Dec. 1, 2022

Xu

(54) CURRENT LIMITING CIRCUIT OF SWITCHING CIRCUIT AND SWITCHING CIRCUIT

(71) Applicant: **Joulwatt Technology Co., Ltd.**, Hangzhou (CN)

(72) Inventor: **Xiangyong Xu**, Hangzhou (CN)

(73) Assignee: **Joulwatt Technology Co., Ltd.**, Hangzhou (CN)

(21) Appl. No.: **17/828,045**

(22) Filed: **May 31, 2022**

(30) **Foreign Application Priority Data**

May 31, 2021 (CN) 202110600543.7

Publication Classification

(51) **Int. Cl.**

H03K 17/0812	(2006.01)
H03K 17/687	(2006.01)
H02H 9/04	(2006.01)
H03K 17/74	(2006.01)

(52) **U.S. Cl.**

CPC ***H03K 17/08122*** (2013.01); ***H03K 17/687*** (2013.01); ***H02H 9/046*** (2013.01); ***H03K 17/74*** (2013.01)

(57) **ABSTRACT**
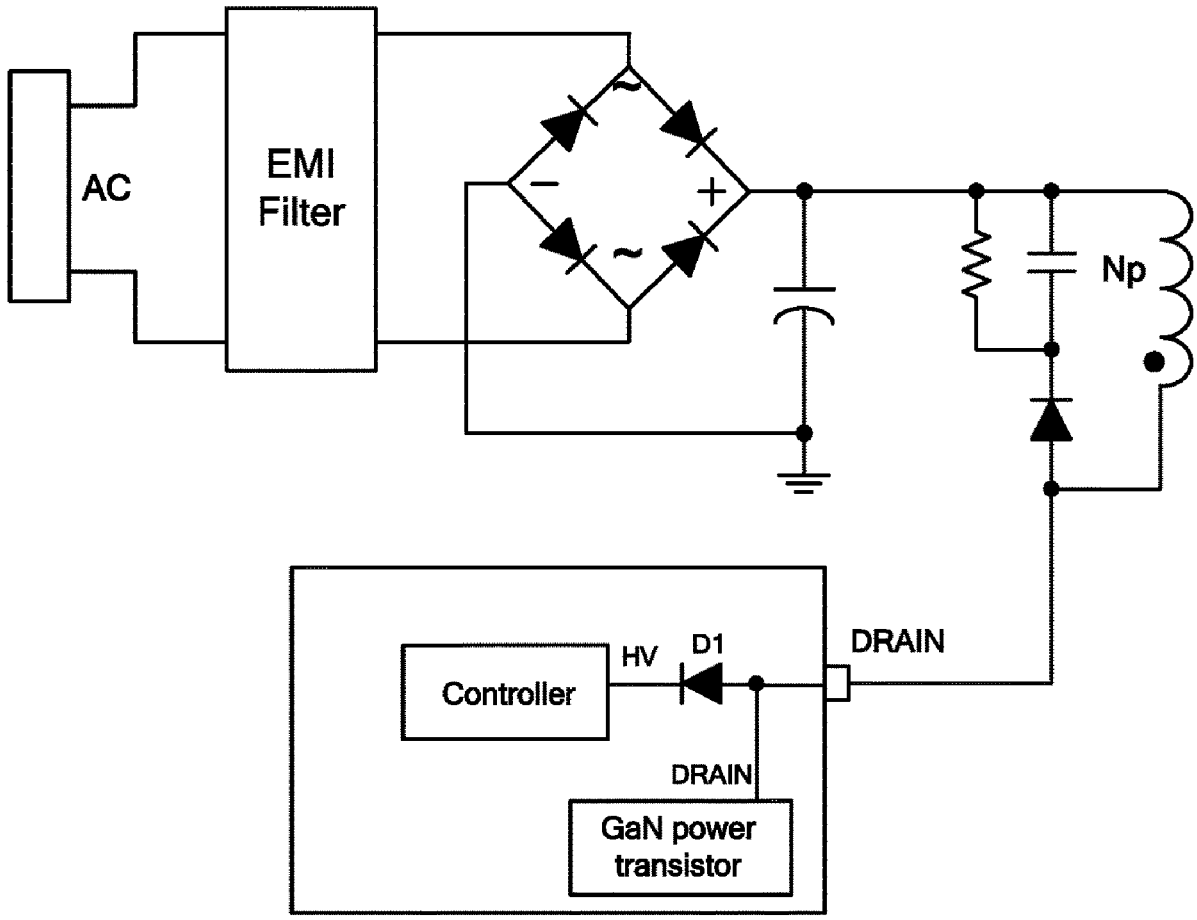
A current limiting circuit of a switching circuit, and a switching circuit are provided. The switching circuit uses a gallium nitride (GaN) power transistor as a main power transistor. The current limiting circuit includes a first terminal connected with a drain of the GaN power transistor, and a second terminal connected with a controller of the switching circuit. The current limiting circuit is configured to limit a current flowing out of a power supply terminal of the controller. The current limiting circuit suppresses a negative current flowing through the controller.