US 20240215147A1

(19) United States

(12) Patent Application Publication

KUMLIN et al.

(10) Pub. No.: US 2024/0215147 A1

(43) Pub. Date: Jun. 27, 2024

(54) **PROTON ENERGY DEGRADER DEVICES AND METHODS OF USING SAME**

(71) Applicant: **ARTMS Inc.**, Burnaby (CA)

(72) Inventors: **Joel KUMLIN**, Burnaby (CA); **Maurice G. DODD**, Chilliwack (CA); **Brian HOOK**, Vancouver (CA)

(21) Appl. No.: **18/288,032**

(22) PCT Filed: **Apr. 21, 2022**

(86) PCT No.: **PCT/CA2022/050607**

§ 371 (c)(1),
(2) Date: **Oct. 23, 2023**

Related U.S. Application Data

(60) Provisional application No. 63/178,817, filed on Apr. 23, 2021.

Publication Classification

(51) **Int. Cl.**

H05H 7/12	(2006.01)
G21G 1/10	(2006.01)
G21K 5/00	(2006.01)
H05H 13/00	(2006.01)

(52) **U.S. Cl.**

CPC ***H05H 7/12*** (2013.01); ***G21G 1/10*** (2013.01); ***G21K 5/00*** (2013.01); *H05H 2007/125* (2013.01); *H05H 13/005* (2013.01)

(57) **ABSTRACT**
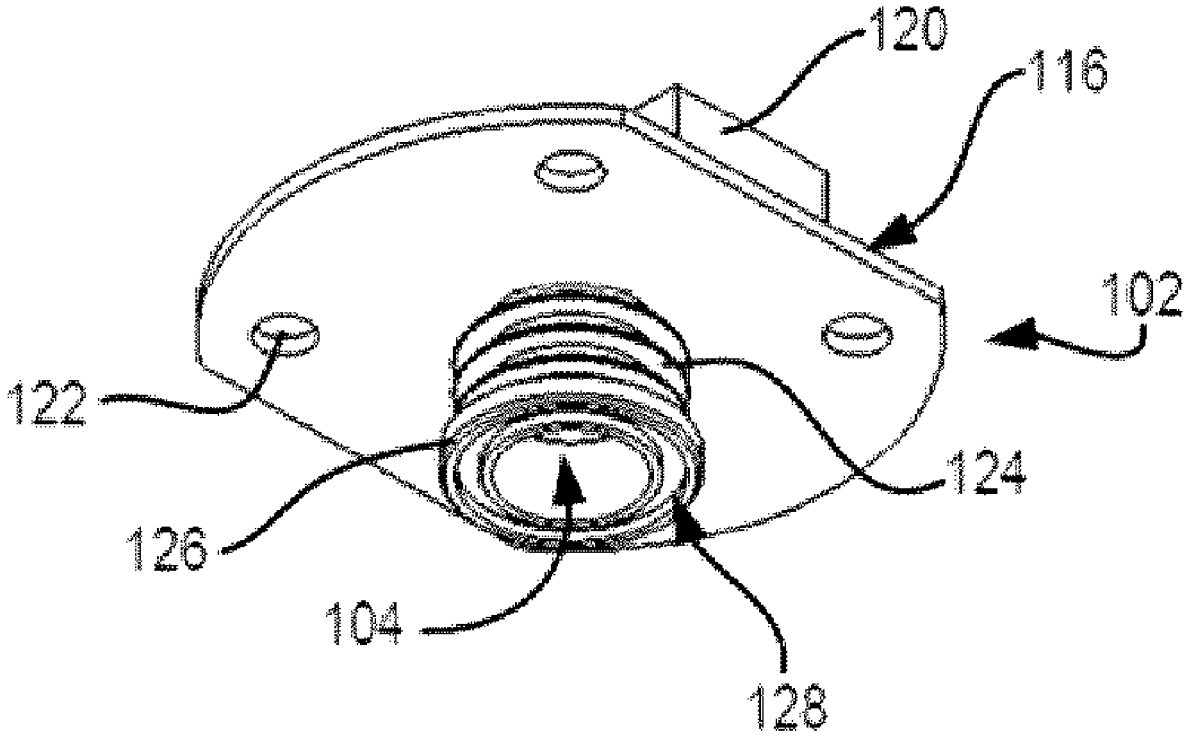
This disclosure relates to a proton beam degrader and a cooling assembly. The proton beam degrader includes a degrader foil that is positioned within a path of a particle beam directed to strike a target. The degrader can include a plurality of fins positioned outside of a conduit within which the degrader foil is positioned to transfer heat away from the degrader foil and into a cooling channel formed in conjunction with the cooling assembly. The degrader foil can have chamfered corners to further improve heat transfer. The degrader foil can include at least one aperture to aid in forming a vacuum condition across the degrader foil. In some examples, where a target cannot operate in a vacuum environment, the degrader can include a degrader foil devoid of any apertures.