US 20220361362A1

(19) United States

(12) Patent Application Publication

(10) Pub. No.: US 2022/0361362 A1

(43) Pub. Date: Nov. 10, 2022

CHEN et al.

(54) **DEDICATED AIR TUNNEL FOR POWER SUPPLY UNIT**

(71) Applicant: **Quanta Computer Inc.**, Taoyuan City (TW)

(72) Inventors: **Jen-Mao CHEN**, Taoyuan City (TW); **Wei-Te WANG**, Taoyuan City (TW); **Ming-Hung TSAI**, Taoyuan City (TW)

(21) Appl. No.: **17/307,740**

(22) Filed: **May 4, 2021**

Publication Classification

(51) **Int. Cl.**

H05K 7/20	(2006.01)
G06F 1/26	(2006.01)
G06F 1/20	(2006.01)
G06F 1/18	(2006.01)

(52) **U.S. Cl.**

CPC ***H05K 7/20145*** (2013.01); ***H05K 7/20172*** (2013.01); ***G06F 1/26*** (2013.01); ***G06F 1/20*** (2013.01); ***G06F 1/181*** (2013.01); ***G06F 1/188*** (2013.01)

(57) **ABSTRACT**
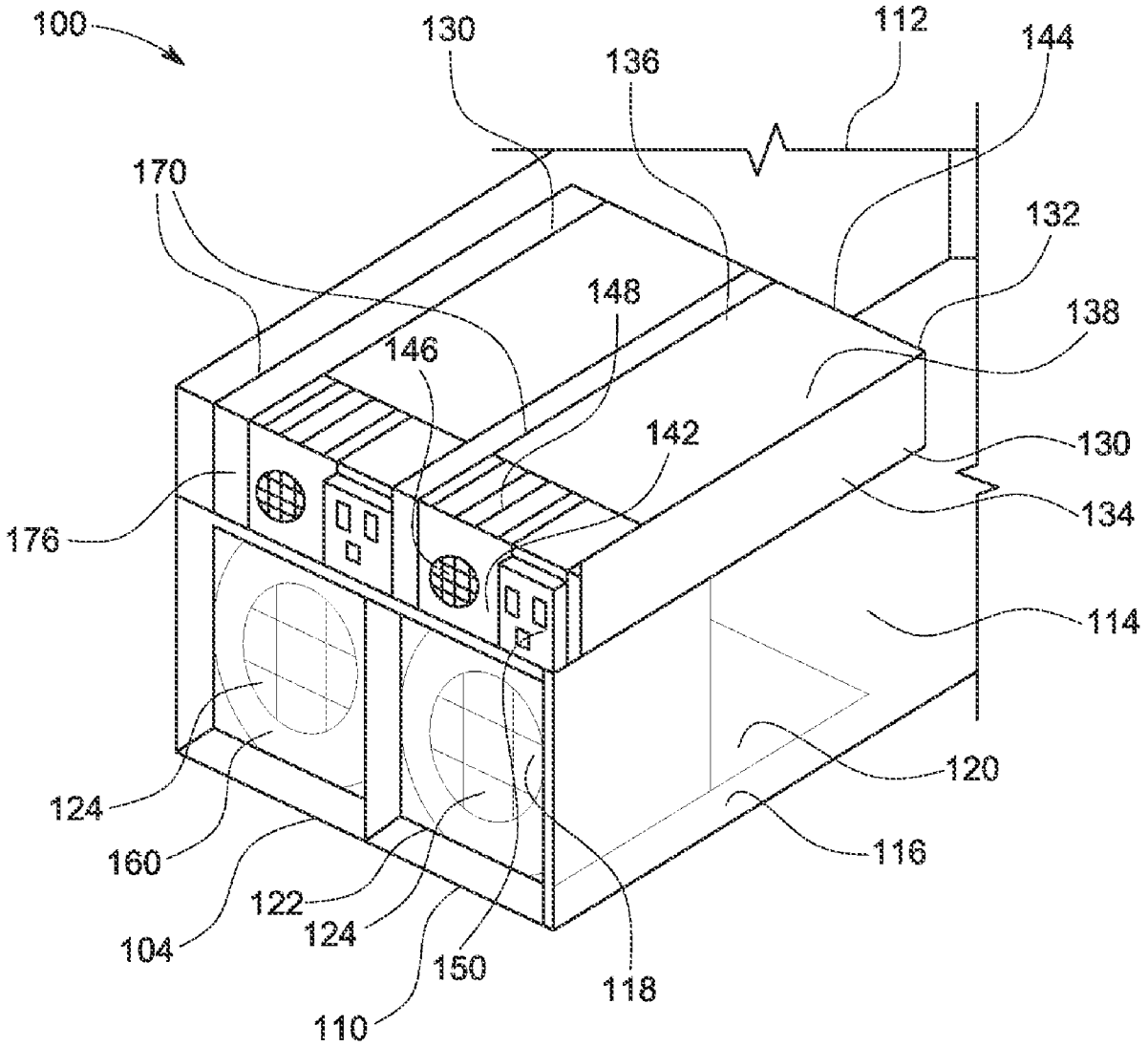
A power supply system for a computer system having a fan module that protects the power supply system from back-flow from the fan module is disclosed. A power supply unit has an internal fan emitting an airflow from one end of the power supply unit. The power supply unit is mountable next to the fan module. The power supply system is mountable in proximity to an air baffle that diverts the airflow generated by the internal fan. An air tunnel is located on one side of the power supply unit. The air tunnel has an opening on one end for receiving the airflow diverted by the air baffle from the internal fan. The air tunnel has an opposite end in proximity to a second opening to divert the received airflow under the power supply unit.