US 20240235543A1

(19) United States
(12) Patent Application Publication
HARRIMAN et al.
(10) Pub. No.: US 2024/0235543 A1
(43) Pub. Date: Jul. 11, 2024

(54) GATE DRIVER WITH THERMAL MONITORING AND CURRENT SENSING

(71) Applicant: **SEMICONDUCTOR COMPONENTS INDUSTRIES, LLC**, Scottsdale, AZ (US)

(72) Inventors: **Paul J. HARRIMAN**, Indian Harbour, FL (US); **Thomas Patrick DUFFY**, Chandler, AZ (US); **James George HILL**, Cave Creek, AZ (US); **Michael Scott LAY**, Tempe, AZ (US); **Margaret SPILLANE**, Limerick (IE)

(73) Assignee: **SEMICONDUCTOR COMPONENTS INDUSTRIES, LLC**, Scottsdale, AZ (US)

(21) Appl. No.: **18/612,902**

(22) Filed: **Mar. 21, 2024**

Related U.S. Application Data

(63) Continuation of application No. 17/651,292, filed on Feb. 16, 2022, now Pat. No. 11,949,406.

(60) Provisional application No. 63/180,488, filed on Apr. 27, 2021.

Publication Classification

(51) **Int. Cl.**

H03K 17/082	(2006.01)
G01K 7/22	(2006.01)
H02M 1/00	(2006.01)
H02M 1/08	(2006.01)
H02M 3/158	(2006.01)
H03K 17/08	(2006.01)

(52) **U.S. Cl.**

CPC ***H03K 17/0822*** (2013.01); ***G01K 7/22*** (2013.01); ***H02M 1/0009*** (2021.05); ***H02M 1/08*** (2013.01); ***H02M 3/158*** (2013.01); *G01K 2219/00* (2013.01); *H03K 2017/0806* (2013.01)

(57) **ABSTRACT**
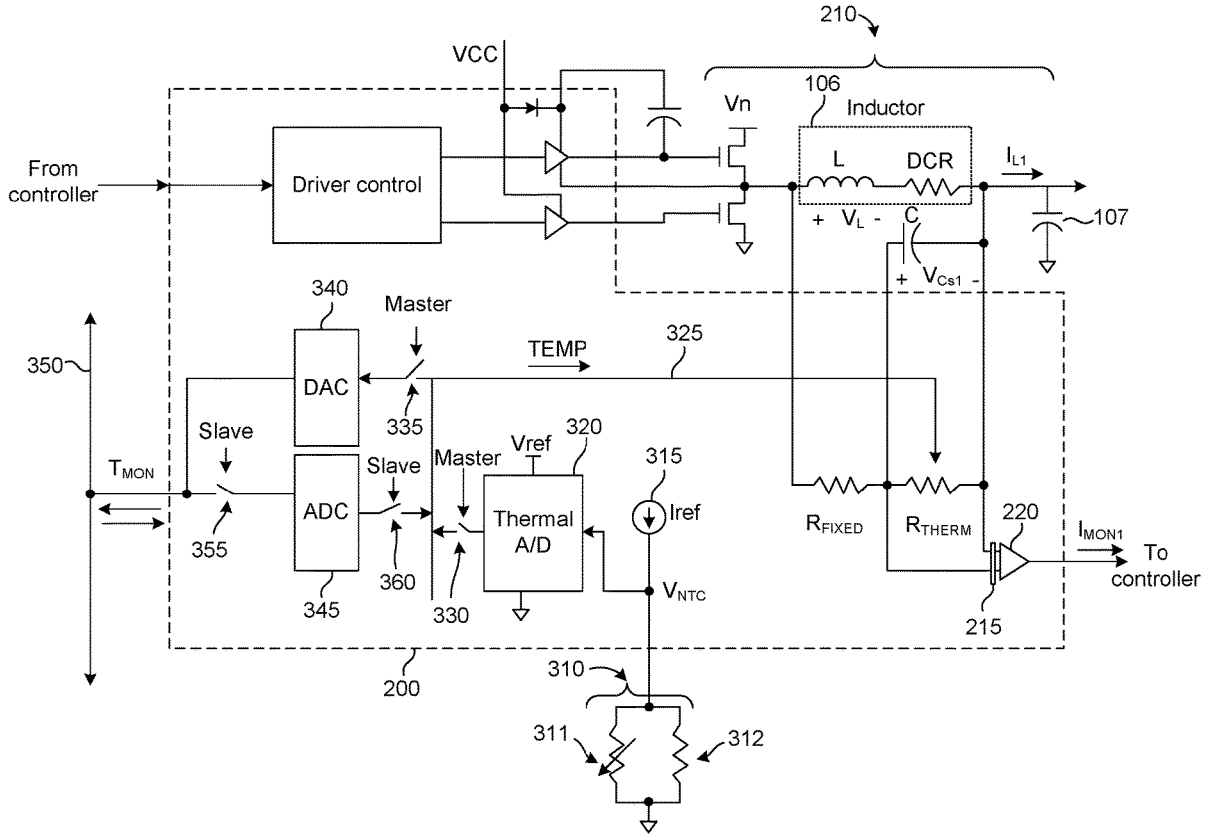
A driver can be configured to provide sensed phase currents as feedback to a controller to indicate the output currents from each phase of a switch mode power supply (SMPS). The driver can be configured to temperature compensate the sensed currents in one of two ways. If a temperature sensor is directly coupled to the driver, then the driver may be configured to temperature compensate the sensed currents from each phase based on a temperature measurement made by the temperature sensor. If a temperature sensor is not directly coupled to the driver, then the driver may be configured to temperature compensate the sensed current from each phase based on a temperature signal received from a bus coupled to the driver. The bus can communicate the temperature signal so that multiple drivers can utilize one temperature sensor.