US 20220377937A1

(19) United States
(12) Patent Application Publication
CHEN et al.
(10) Pub. No.: US 2022/0377937 A1
(43) Pub. Date: Nov. 24, 2022

(54) **COLD PLATE WITH ANTI-CLOGGING MECHANISM**

(71) Applicant: **Quanta Computer Inc.**, Taoyuan City (TW)

(72) Inventors: **Chao-Jung CHEN**, Taoyuan City (TW); **Yu-Nien HUANG**, Taoyuan City (TW); **Kuo-Wei LEE**, Taoyuan City (TW)

(21) Appl. No.: **17/445,374**

(22) Filed: **Aug. 18, 2021**

Related U.S. Application Data

(60) Provisional application No. 63/191,648, filed on May 21, 2021.

Publication Classification

(51) **Int. Cl.**
H05K 7/20 (2006.01)

(52) **U.S. Cl.**
CPC ***H05K 7/20254*** (2013.01); ***H05K 7/20272*** (2013.01); ***H05K 7/20509*** (2013.01); ***H05K 7/20409*** (2013.01)

(57) **ABSTRACT**
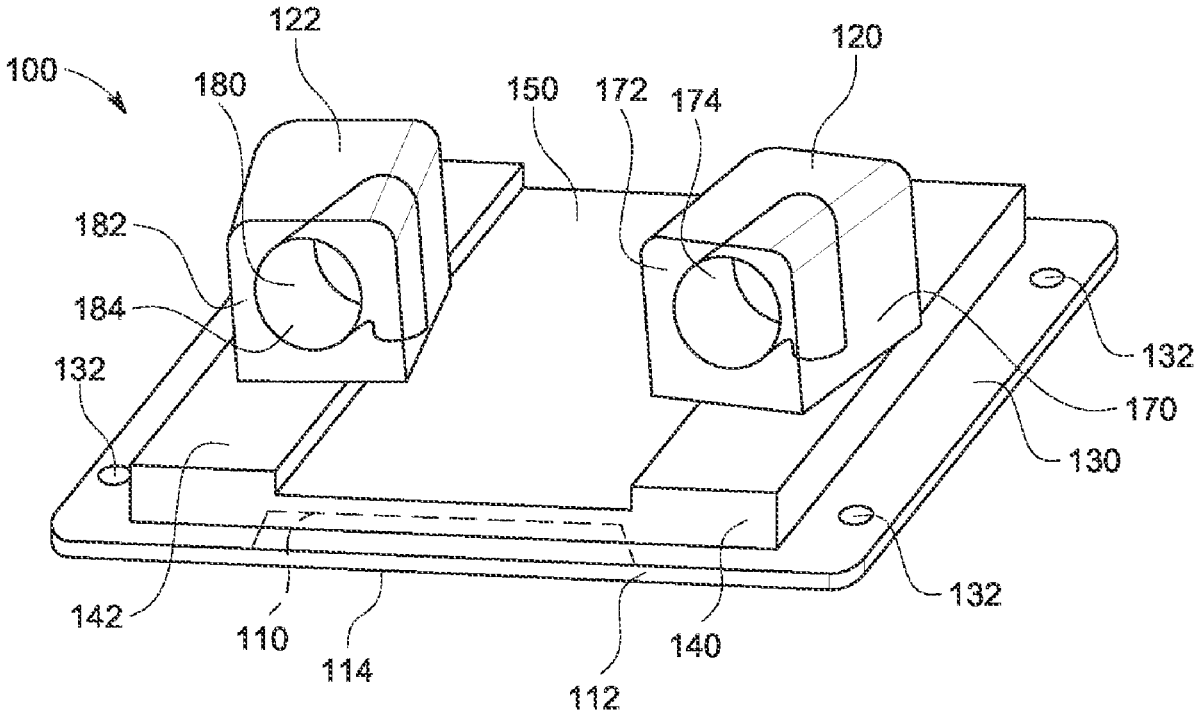
A cold plate for cooling a heat-generating component in a computer system is disclosed. The cold plate includes a lid member with a lower supply manifold housing and a lower collection manifold housing. The cold plate includes a base member having coolant channels defined by fins. Each of the fins have a top section and a bottom section attached to the base member. An interior cavity is defined by an arc-shaped section of the fins, the interior surface of the base, and the lower supply manifold housing. An interior corner is formed by the lower supply manifold housing of the lower manifold housing at the top of the fins to trap debris. An upper inlet manifold has a connector to receive coolant. An upper outlet manifold has a connector to circulate coolant. The upper manifolds are in fluid communication with the collection manifold housings.