US 20230232592A1

(19) United States
(12) Patent Application Publication
Killen, JR. et al.

(10) Pub. No.: US 2023/0232592 A1
(43) Pub. Date: Jul. 20, 2023

(54) **DATA STORAGE COOLING MODULE**

(71) Applicant: **Sanmina Corporation**, San Jose, CA (US)

(72) Inventors: **Odie Banks Killen, JR.**, Colorado Springs, CO (US); **Matthew J. Babcock**, Monument, CO (US); **Brendan Ruggles**, Colorado Springs, CO (US)

(21) Appl. No.: **17/578,313**

(22) Filed: **Jan. 18, 2022**

Publication Classification

(51) **Int. Cl.**

H05K 7/20	(2006.01)
G06F 1/20	(2006.01)
G11B 33/14	(2006.01)

(52) **U.S. Cl.**
CPC ***H05K 7/20563*** (2013.01); ***G06F 1/20*** (2013.01); ***G11B 33/1406*** (2013.01)

(57) **ABSTRACT**
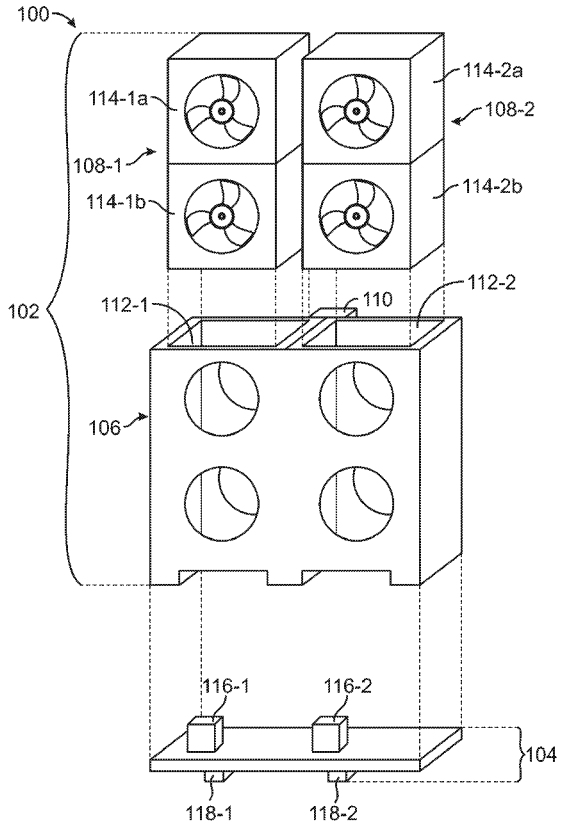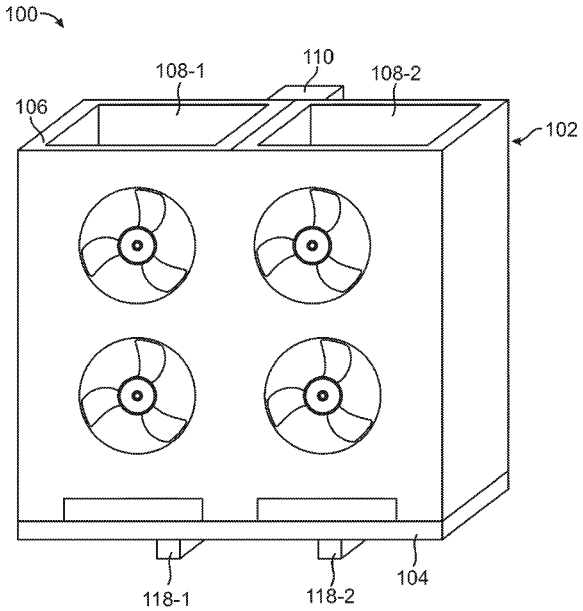
One feature pertains to a data storage cooling module. The data storage cooling module comprises a fan cage assembly, the fan cage assembly including a fan cage that includes at least one fan bay, at least one fan assembly removably coupled to the at least one fan bay, and an interface board removably coupled to the fan cage assembly, the interface board including a first interface surface that includes at least one power connector configured to interface with the at least one fan assembly, and a second interface surface that includes at least one drive connector configured to interface with a baseboard.