US 20230230744A1

(19) United States
(12) Patent Application Publication
Klesyk et al.
(10) Pub. No.: US 2023/0230744 A1
(43) Pub. Date: Jul. 20, 2023

(54) **ELECTRONIC COMPONENT AND METHODS RELATING TO SAME**

(71) Applicant: **Coilcraft, Incorporated**, Cary, NC (US)

(72) Inventors: **Andrew Klesyk**, Lake in the Hills, IL (US); **Lawrence B. Lestarge**, Algonquin, IL (US); **Scott Hess**, Crystal Lake, IL (US); **Hyeonchul Park**, Mount Prospect, IL (US)

(21) Appl. No.: **18/097,076**

(22) Filed: **Jan. 13, 2023**

Related U.S. Application Data

(60) Provisional application No. 63/299,508, filed on Jan. 14, 2022.

Publication Classification

(51) **Int. Cl.**

H01F 27/00	(2006.01)
H01F 27/02	(2006.01)
H01F 27/28	(2006.01)
H01F 27/06	(2006.01)
H01F 27/32	(2006.01)

(52) **U.S. Cl.**

CPC ***H01F 27/006*** (2013.01); ***H01F 27/022*** (2013.01); ***H01F 27/2823*** (2013.01); ***H01F 27/06*** (2013.01); ***H01F 27/323*** (2013.01); *H01F 2027/065* (2013.01)

(57) **ABSTRACT**
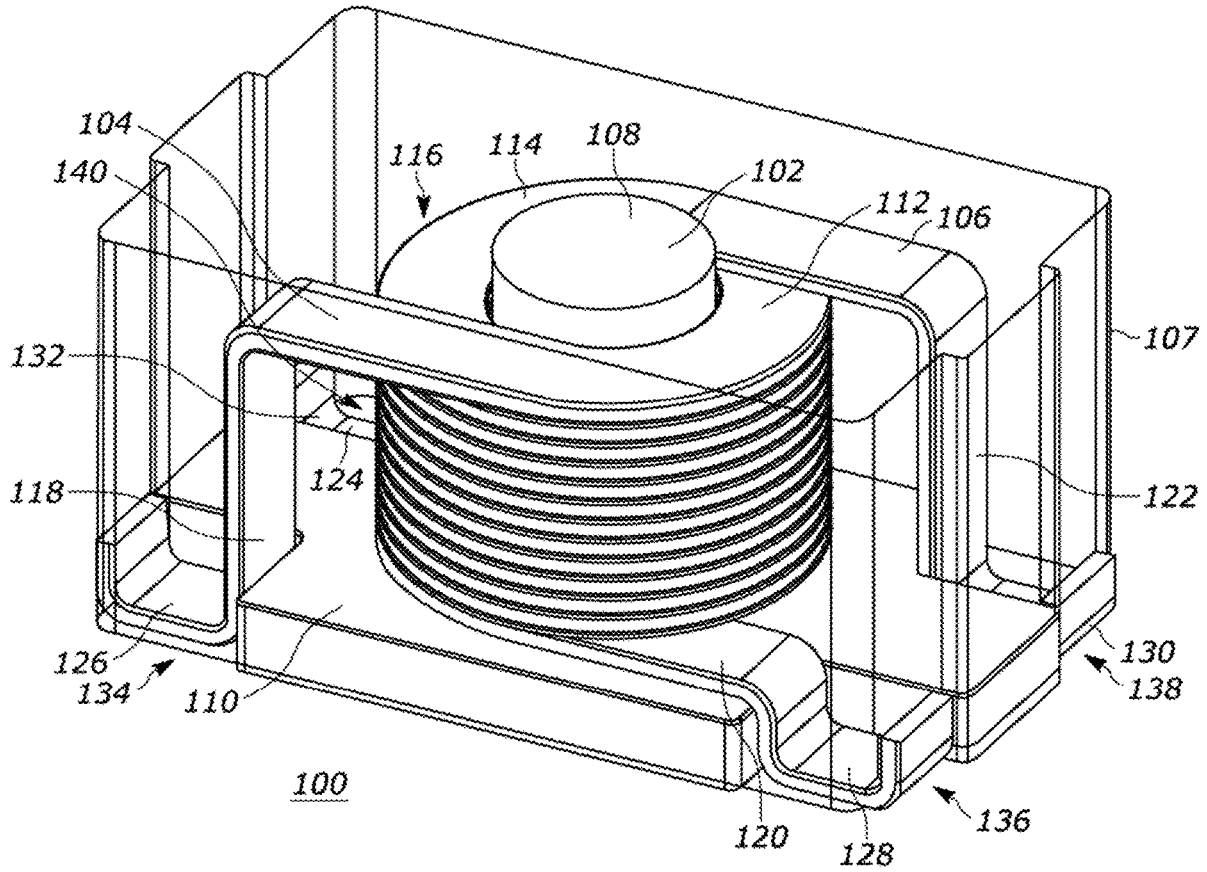
An electronic component, such as, for example, a transformer, includes a core, a first wire, and a second wire. The first wire is wound at least in part about at least a portion of the core in a first winding. The second wire is wound at least in part about at least a portion of the core in a second winding such that the first winding and the second winding alternate at least in part along at least a portion of the core. The electronic component includes windings that are intertwined about the core to form an intertwined spiral winding. Such a configuration can both improve electrical characteristics of the electronic component while reducing a height of the electronic component. Further, methods of manufacturing such components and customizing same are disclosed.