US 20230230761A1

(19) United States
(12) Patent Application Publication
HONG et al.
(10) Pub. No.: US 2023/0230761 A1
(43) Pub. Date: Jul. 20, 2023

(54) **MAGNETIC ELEMENT AND POWER MODULE**

(71) Applicant: **Delta Electronics (Shanghai) CO., LTD**, Shanghai (CN)

(72) Inventors: **Shouyu HONG**, Shanghai (CN); **Qingdong CHEN**, Shanghai (CN); **Shuairan BI**, Shanghai (CN); **Qian WAN**, Shanghai (CN); **Zengsheng WANG**, Shanghai (CN); **Ganyu ZHOU**, Shanghai (CN); **Zhiheng FU**, Shanghai (CN); **Jinping ZHOU**, Shanghai (CN); **Yiqing YE**, Shanghai (CN)

(73) Assignee: **Delta Electronics (Shanghai) CO., LTD**, Shanghai (CN)

(21) Appl. No.: **18/156,424**

(22) Filed: **Jan. 19, 2023**

(30) **Foreign Application Priority Data**

Jan. 20, 2022 (CN) 202210068306.5

Publication Classification

(51) **Int. Cl.**

H01F 27/30	(2006.01)
H01F 27/24	(2006.01)
H01F 27/29	(2006.01)
H01F 27/40	(2006.01)

(52) **U.S. Cl.**

CPC ***H01F 27/306*** (2013.01); ***H01F 27/24*** (2013.01); ***H01F 27/29*** (2013.01); ***H01F 27/40*** (2013.01)

(57) **ABSTRACT**
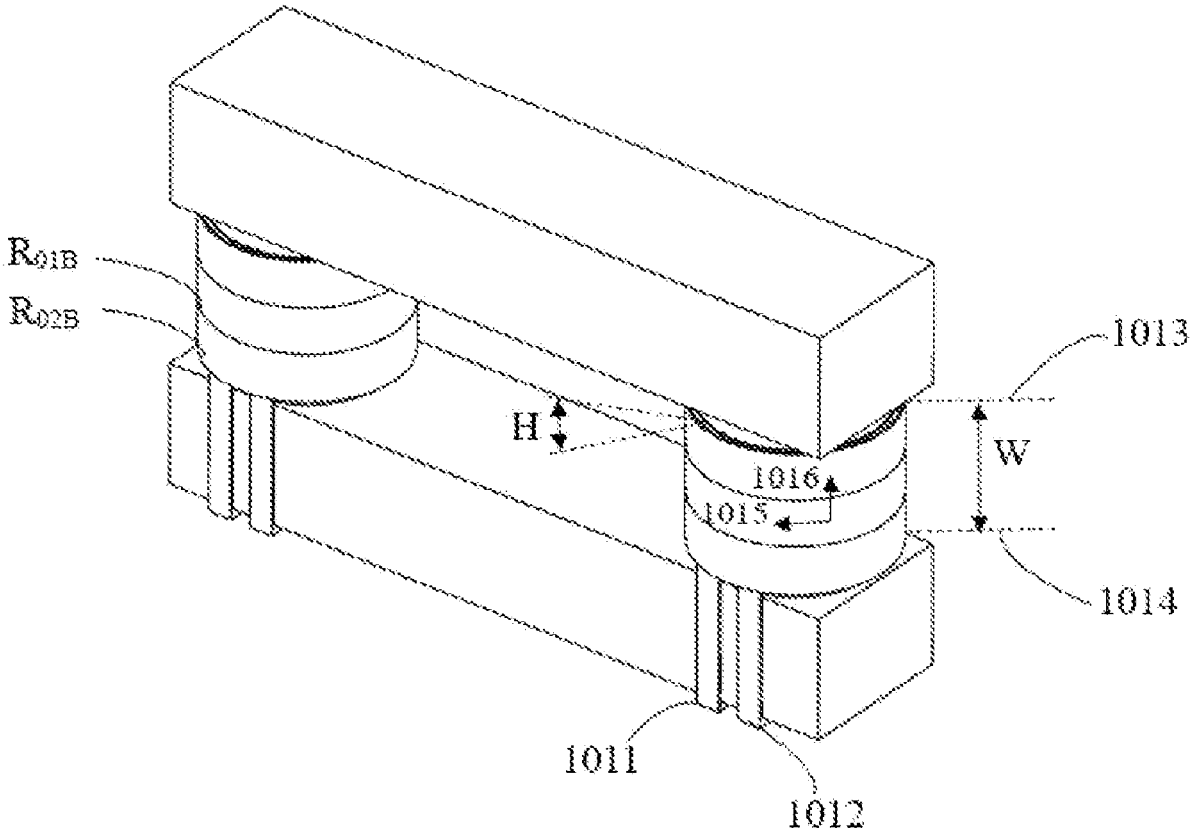
The present disclosure provides a magnetic element, including: a magnetic core with at least one magnetic column extending along a first direction; a first winding surrounding the magnetic column; a second winding at least partially surrounding the first winding; and a third winding at least partially surrounding the second winding. The number of turns of the second winding is less than or equal to the number of turns of the first winding. The number of turns of the third winding is less than or equal to the number of turns of the first winding.