US 20220377857A1

(19) United States

(12) Patent Application Publication

O'ryan et al.

(10) Pub. No.: US 2022/0377857 A1

(43) Pub. Date: Nov. 24, 2022

(54) **PANE-LIKE ARTICLE AND ITS USE, AND HOUSEHOLD APPLIANCE COMPRISING THE SAME**

(71) Applicant: **SCHOTT AG**, Mainz (DE)

(72) Inventors: **Adam O'ryan**, Sweetwater, TN (US); **Martin Letz**, Mainz (DE); **Martun Hovhannisyan**, Heusenstamm (DE); **Ioannis Neitzel**, Bobingen (DE)

(21) Appl. No.: **17/876,690**

(22) Filed: **Jul. 29, 2022**

Related U.S. Application Data

(63) Continuation of application No. PCT/EP2021/052096, filed on Jan. 29, 2021.

(60) Provisional application No. 62/968,198, filed on Jan. 31, 2020.

Publication Classification

(51) **Int. Cl.**

H05B 6/76 (2006.01)

H05B 6/64 (2006.01)

(52) **U.S. Cl.**

CPC ***H05B 6/766*** (2013.01); ***H05B 6/6414*** (2013.01); ***H05B 6/6444*** (2013.01)

(57) **ABSTRACT**
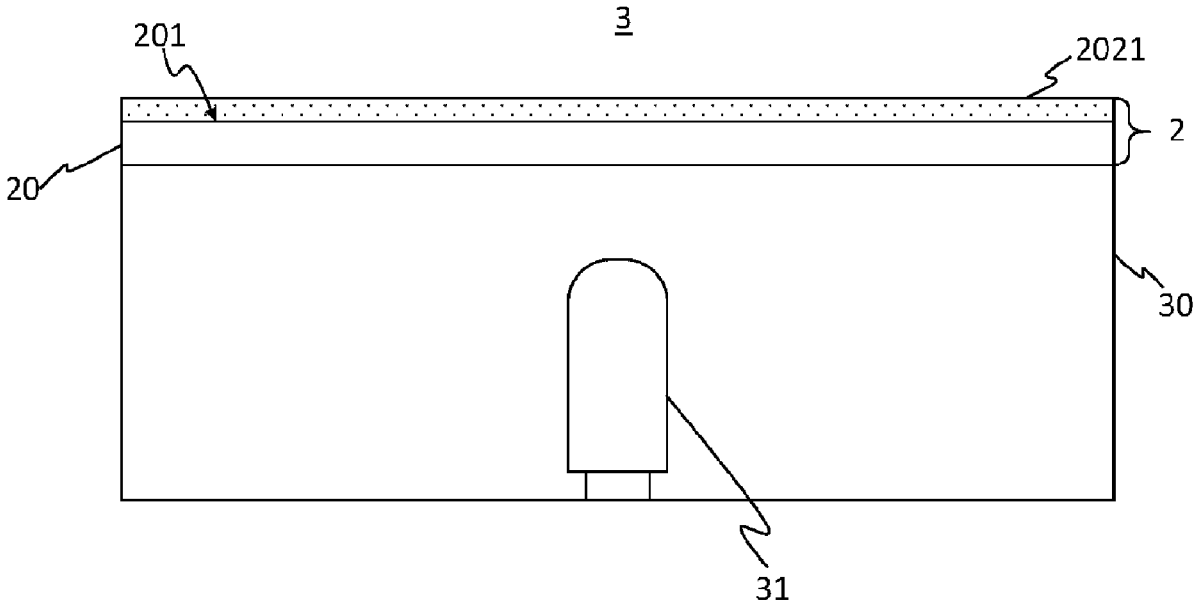
The present disclosure relates to pane-like articles, such as glass or glass ceramic substrates, suited for microwave-shielding applications, such as microwave oven doors or covers for electronic components. The present disclosure further relates to a household appliance comprising a pane-like article.