US 20240215184A1

(19) United States
(12) Patent Application Publication
AHN et al.
(10) Pub. No.: US 2024/0215184 A1
(43) Pub. Date: Jun. 27, 2024

(54) **DISPLAY DEVICE**

(71) Applicant: **LG ELECTRONICS INC.**, Seoul (KR)

(72) Inventors: **Kwanghyun AHN**, Seoul (KR); **Haesuk CHOI**, Seoul (KR); **Dongkyoon HAN**, Seoul (KR); **Jihoon YOON**, Seoul (KR); **Seokwoo KWON**, Seoul (KR)

(73) Assignee: **LG ELECTRONICS INC.**, Seoul (KR)

(21) Appl. No.: **18/288,762**

(22) PCT Filed: **Mar. 31, 2022**

(86) PCT No.: **PCT/KR2022/004647**

§ 371 (c)(1),
(2) Date: **Oct. 27, 2023**

Publication Classification

(51) **Int. Cl.**
H05K 5/02 (2006.01)

(52) **U.S. Cl.**
CPC *H05K 5/0234* (2013.01)

(57) **ABSTRACT**
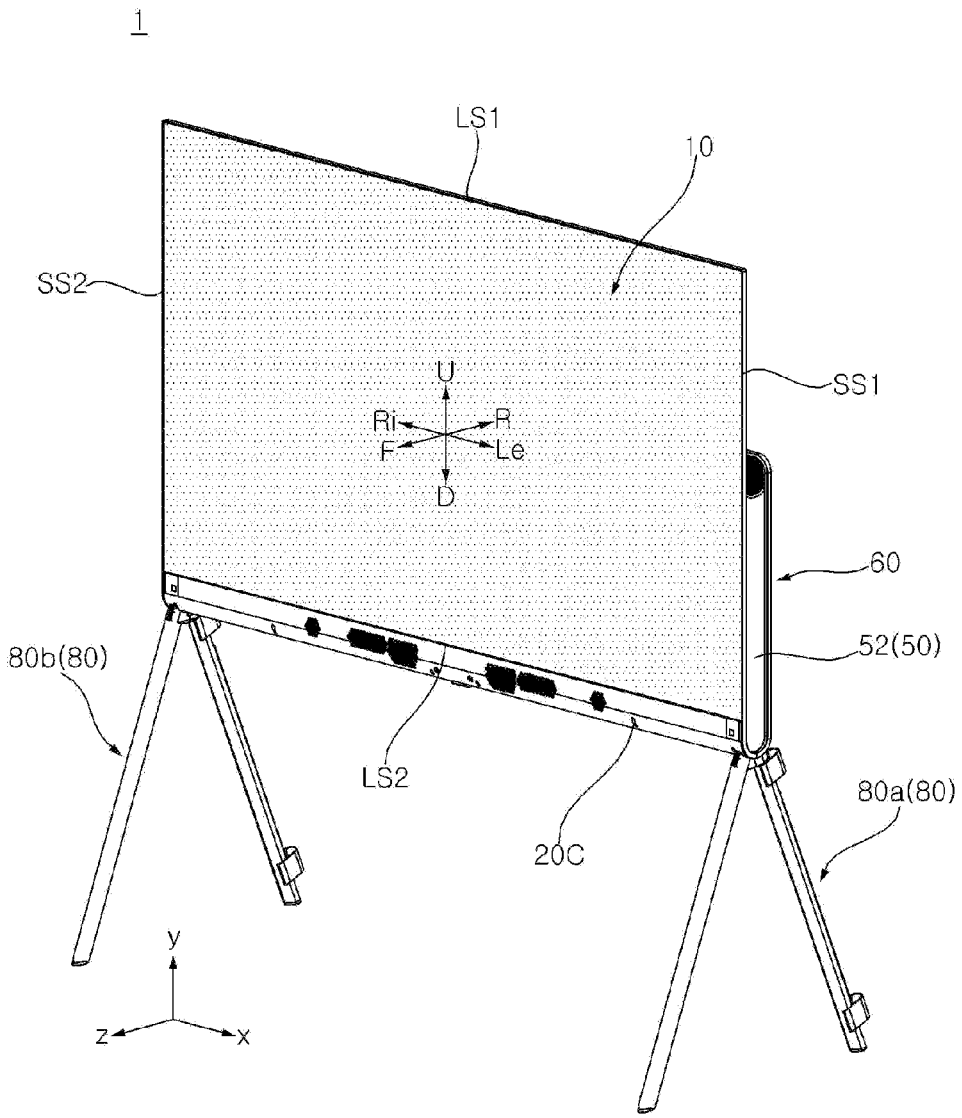
Disclosed is a display device. The display device of the present disclosure includes: a display panel; a frame which is located in a rear of the display panel, and to which the display panel is coupled; a back cover which covers a rear of the frame, and which is coupled to the frame; and a basket which is located in a rear of the back cover, and which has an inner space, wherein an upper side of the back cover is spaced apart from an upper side of the frame in a rearward direction, and the basket spans the upper side of the back cover.