US 20240223128A1

(19) United States
(12) Patent Application Publication
Amarnath et al.
(10) Pub. No.: US 2024/0223128 A1
(43) Pub. Date: Jul. 4, 2024

(54) **PEAK DETECTION CIRCUIT TO DETECT AND CONTROL OUTPUT SWING LEVEL OF VOLTAGE CONTROLLED OSCILLATOR**

(71) Applicant: **Signalchip Innovations Private Limited**, Bangalore (IN)

(72) Inventors: **Kishen Amarnath**, Bangalore (IN); **Himamshu Gopalakirshna Khasnis**, Bangalore (IN)

(21) Appl. No.: **18/401,206**

(22) Filed: **Dec. 29, 2023**

(30) **Foreign Application Priority Data**

Dec. 31, 2022 (IN) 202241077698

Publication Classification

(51) **Int. Cl.**
H03B 5/12 (2006.01)

(52) **U.S. Cl.**
CPC ... ***H03B 5/1212*** (2013.01); *H03B 2200/0088* (2013.01)

(57) **ABSTRACT**
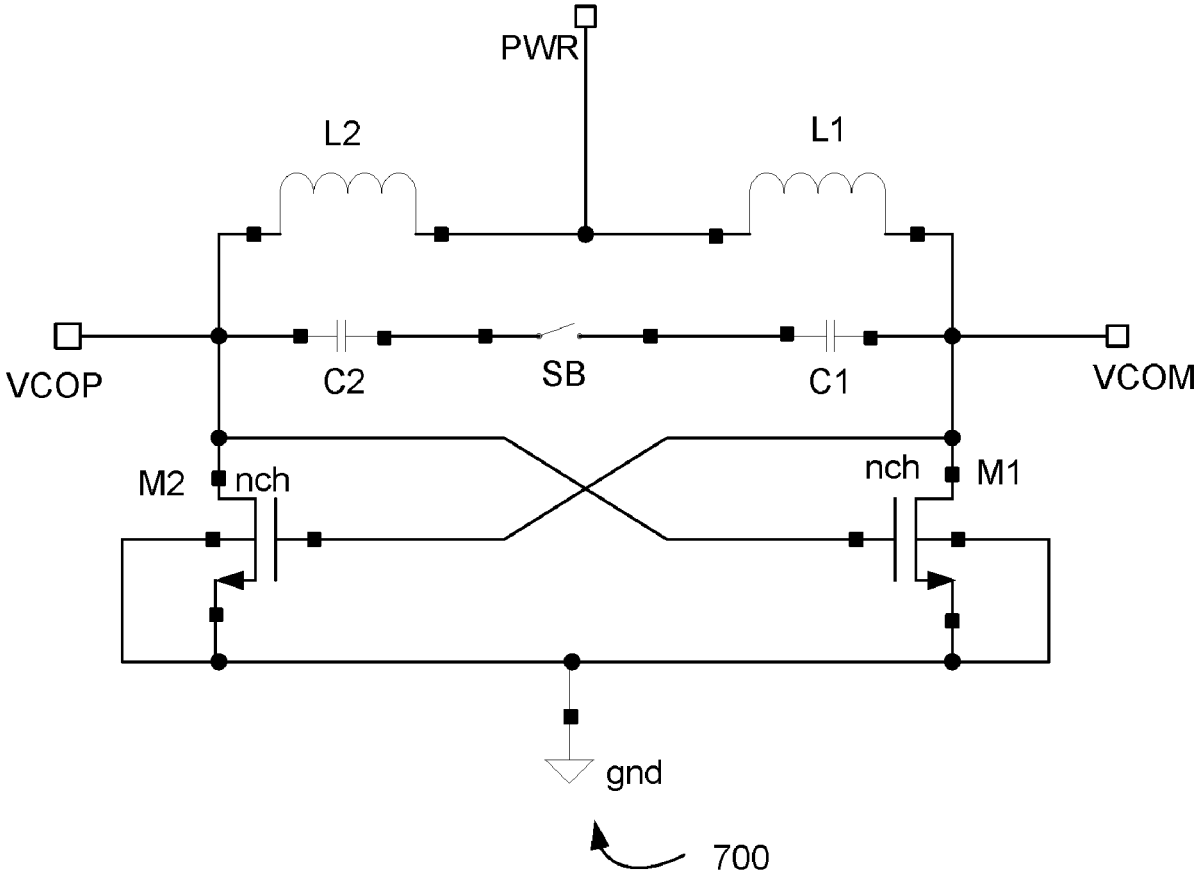
A circuit for detecting, controlling, and maintaining optimal output swing for a noise performance at a given power with an improved operating range is provided. The circuit includes a Voltage Controlled Oscillator (VCO) (**102**), a peak detection circuit (**104**) and an Analog Bias Controller (**108**). The VCO includes a bias control that is connected to the output swing of the VCO. The peak detection circuit is added at an output of the VCO. The peak detection circuit detects an output swing of the VCO and controls the output swing by controlling bias of the VCO using a feedback loop. An output voltage of the peak detection circuit is proportional to the output swing of the VCO. The Analog Bias Controller compares the output voltage of the peak detection circuit to a reference (VDD) to maintain the output swing of the VCO at a constant level that corresponds to an internally generated reference.