US 20220361380A1

(19) United States
(12) Patent Application Publication
Heydari
(10) Pub. No.: US 2022/0361380 A1
(43) Pub. Date: Nov. 10, 2022

(54) **MODULAR THERMAL TEST VEHICLE**

(71) Applicant: **Nvidia Corporation**, Santa Clara, CA (US)

(72) Inventor: **Ali Heydari**, Albany, CA (US)

(21) Appl. No.: **17/314,184**

(22) Filed: **May 7, 2021**

Publication Classification

(51) **Int. Cl.**
H05K 7/20 (2006.01)
G06F 1/20 (2006.01)

(52) **U.S. Cl.**
CPC ***H05K 7/20836*** (2013.01); ***H05K 7/208*** (2013.01); ***G06F 1/206*** (2013.01)

(57) **ABSTRACT**
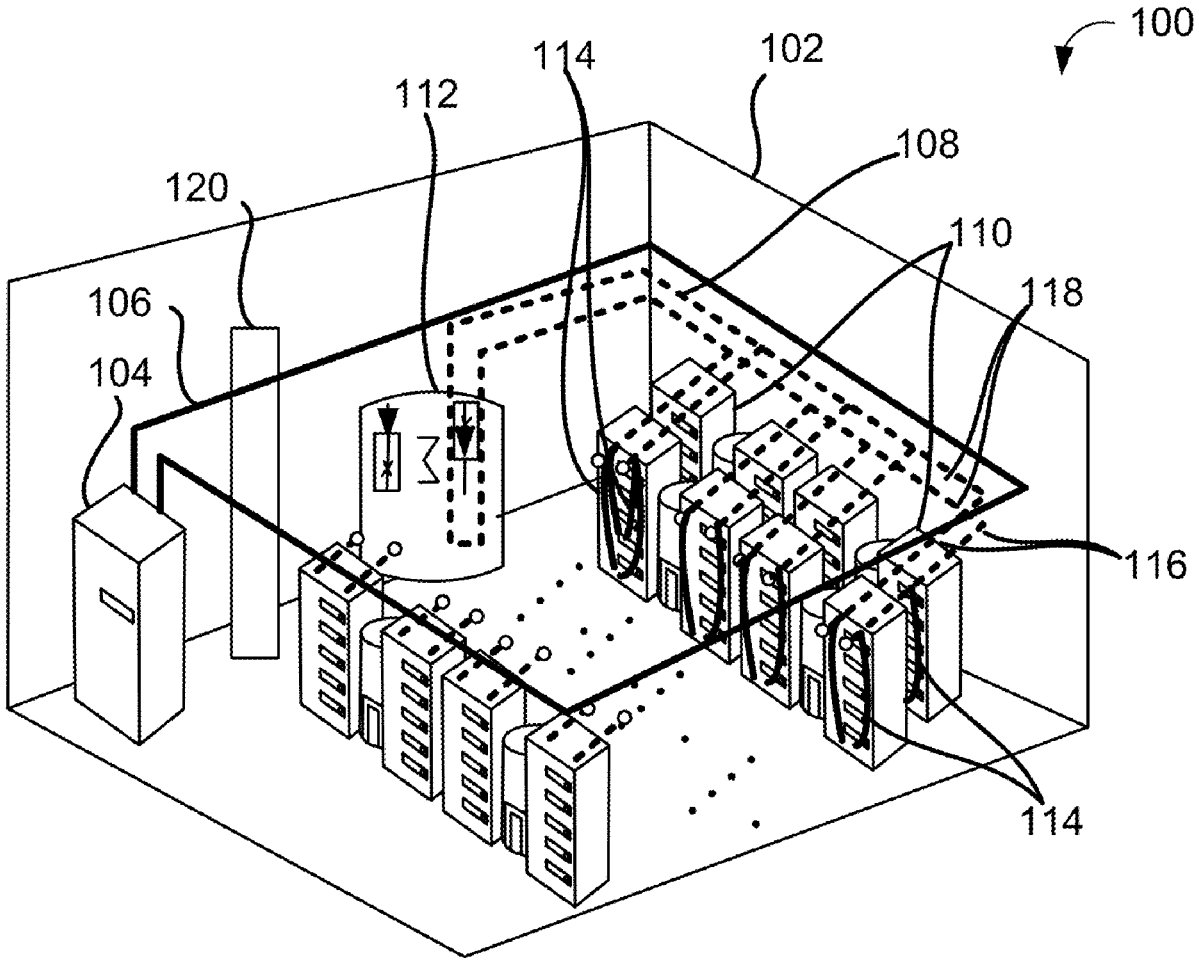
Systems and methods for evaluating cooling characteristics are disclosed. In at least one embodiment, a thermal testing rig for a data center can include one or more pluggable heat-generating elements to direct a heat flux in an upward direction towards one or more thermal distribution elements.