US 20240178727A1

(19) United States
(12) Patent Application Publication
Shi et al.
(10) Pub. No.: US 2024/0178727 A1
(43) Pub. Date: May 30, 2024

(54) **DIRECT DRIVE TRANSMISSION SYSTEM**

(71) Applicant: **AAC Technologies (Nanjing) Co., Ltd.**, Nanjing (CN)

(72) Inventors: **Weiling Shi**, Nanjing (CN); **Shun Guo**, Nanjing (CN); **Yongjian Xue**, Nanjing (CN)

(21) Appl. No.: **18/322,624**

(22) Filed: **May 24, 2023**

Related U.S. Application Data

(63) Continuation of application No. PCT/CN2022/144295, filed on Dec. 30, 2022.

(30) **Foreign Application Priority Data**

Nov. 25, 2022 (CN) 202223154738.2

Publication Classification

(51) **Int. Cl.**
H02K 11/21 (2006.01)
H02K 1/14 (2006.01)
H02K 1/2791 (2006.01)

(52) **U.S. Cl.**
CPC ***H02K 11/21*** (2016.01); ***H02K 1/148*** (2013.01); ***H02K 1/2791*** (2022.01)

(57) **ABSTRACT**

The disclosure provides a direct drive transmission system. The direct drive transmission system includes a mover unit and a stator unit driving the mover unit to move. The stator unit includes a stator assembly, two first end covers, and two first guide rails. The mover unit includes a mover assembly, two second end covers, and two second guide rails. The direct drive transmission system further includes a limiting structure. An end of the limiting structure close to each of the second end covers is located between the two second end covers. The stator assembly drives the mover assembly to cause the second guide rail to move along the first guide rail, such that the second end cover contacts a side wall of the limiting structure to realize limiting.
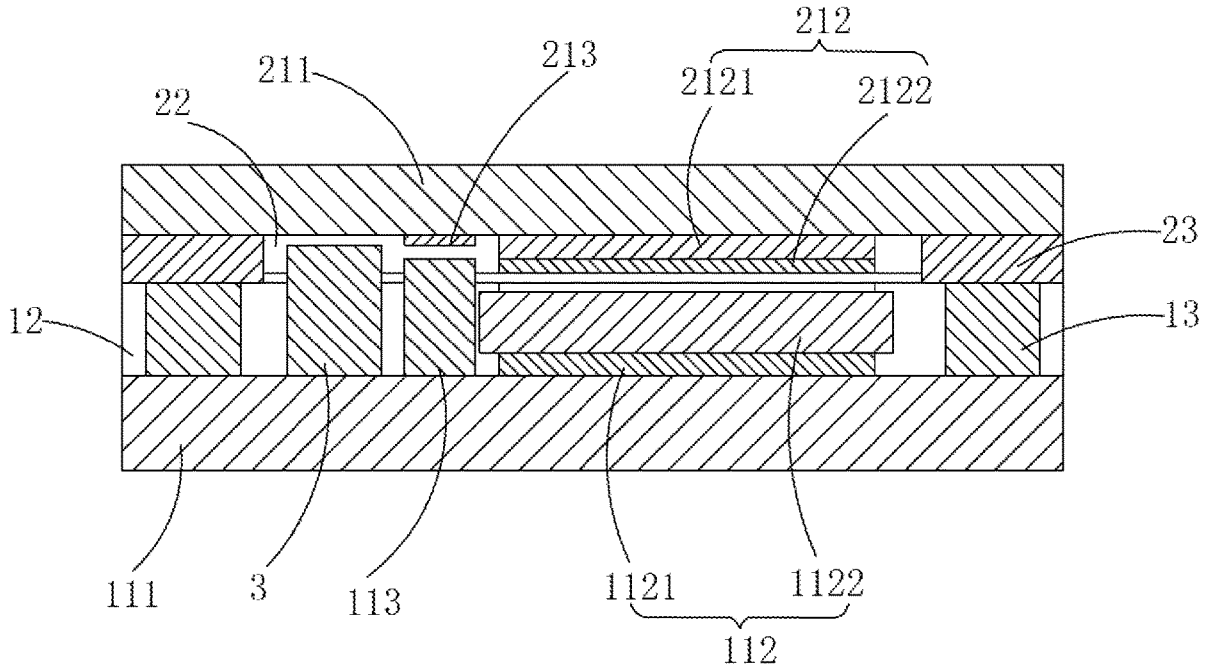
A-A