US 20230231465A1

(19) United States
(12) Patent Application Publication
Mao et al.
(10) Pub. No.: US 2023/0231465 A1
(43) Pub. Date: Jul. 20, 2023

(54) **ADVANCED POWER CONTROL TECHNIQUES**

(71) Applicants: **Hengchun Mao**, Allen, TX (US); **Yuxin Li**, Stillwater, OK (US)

(72) Inventors: **Hengchun Mao**, Allen, TX (US); **Yuxin Li**, Stillwater, OK (US)

(21) Appl. No.: **18/099,227**

(22) Filed: **Jan. 19, 2023**

Related U.S. Application Data

(60) Provisional application No. 63/301,155, filed on Jan. 20, 2022.

Publication Classification

(51) **Int. Cl.**

H02M 1/00	(2006.01)
H02M 7/219	(2006.01)
H02M 3/07	(2006.01)
H02J 50/12	(2006.01)
H02M 1/08	(2006.01)

(52) **U.S. Cl.**

CPC ***H02M 1/0058*** (2021.05); ***H02M 7/2195*** (2021.05); ***H02M 3/07*** (2013.01); ***H02J 50/12*** (2016.02); ***H02M 1/083*** (2013.01); ***H02M 1/0025*** (2021.05); *H02J 2207/20* (2020.01)

(57) **ABSTRACT**
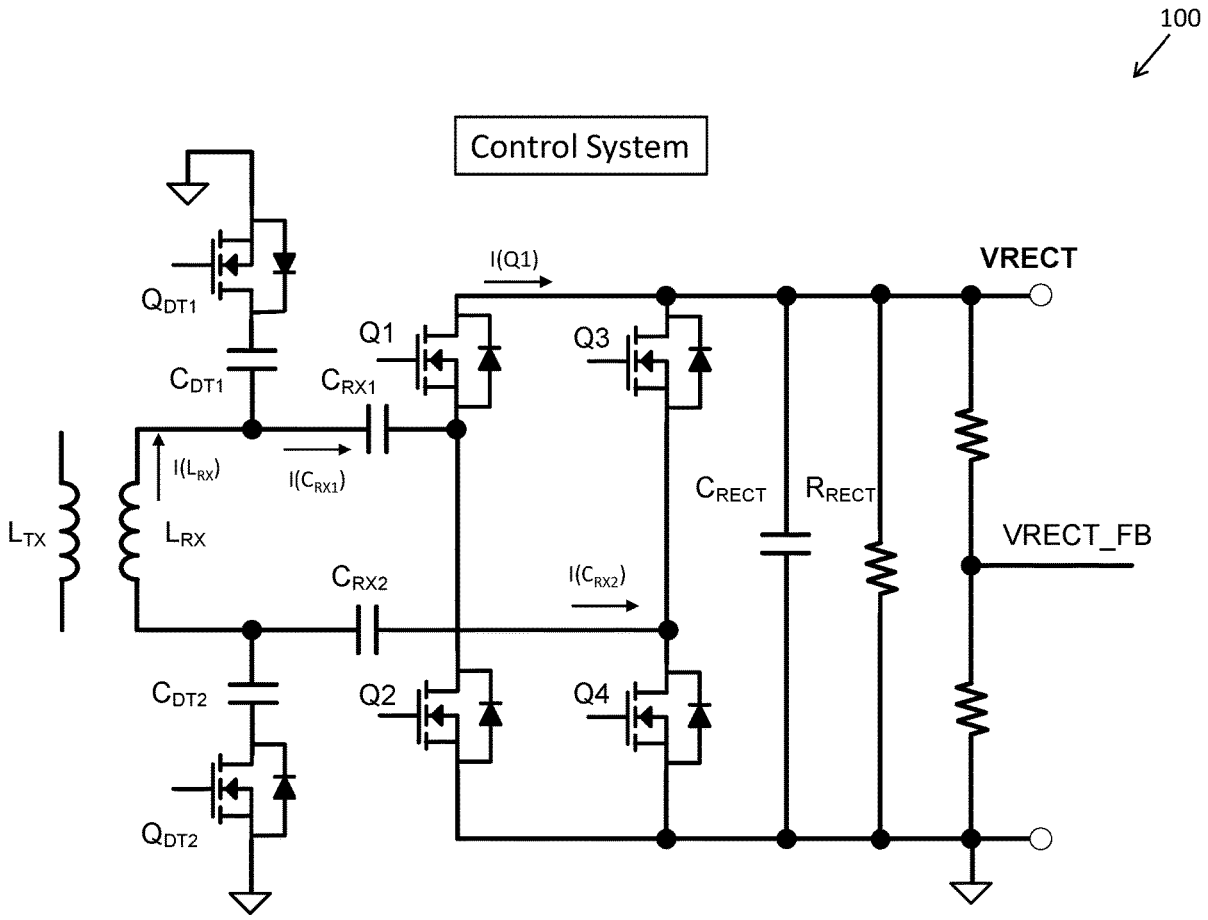
A device includes a switch network having a plurality of power switches and coupled to a dc rail with a dc voltage, and a resonant tank coupled to the switch network. The resonant tank has a first coil and a resonant capacitor. Gate drive signals of a group of power switches of the plurality of power switches in the switch network are configured to be turned on with a phase shift against a zero crossing of a current in the resonant tank, and the phase shift is configured to adjust the dc voltage or establish a soft-switching condition for the plurality of power switches in an operation mode.