US 20240213896A1

(19) United States
(12) Patent Application Publication
Marchner et al.
(10) Pub. No.: US 2024/0213896 A1
(43) Pub. Date: Jun. 27, 2024

(54) **METHOD AND APPARATUS FOR ACTUATING AN ELECTRIC MOTOR, COFFEE MACHINE, COMPUTER PROGRAM PRODUCT AND COMPUTER-READABLE STORAGE MEDIUM**

(71) Applicant: **BSH Hausgeräte GmbH**, München (DE)

(72) Inventors: **Maximilian Marchner**, Tacherting (DE); **Christian Nerbl**, Wasserburg am Inn (DE); **Florian Garschhammer**, Palling (DE); **Simon Gallinger**, Traunreut (DE)

(21) Appl. No.: **18/395,823**

(22) Filed: **Dec. 26, 2023**

(30) **Foreign Application Priority Data**

Dec. 23, 2022 (DE) 102022214363.9

Publication Classification

(51) **Int. Cl.**

H02P 6/21	(2006.01)
A47J 31/42	(2006.01)
A47J 42/44	(2006.01)
A47J 42/46	(2006.01)

(52) **U.S. Cl.**

CPC ***H02P 6/21*** (2016.02); ***A47J 31/42*** (2013.01); ***A47J 42/44*** (2013.01); ***A47J 42/46*** (2013.01)

(57) **ABSTRACT**
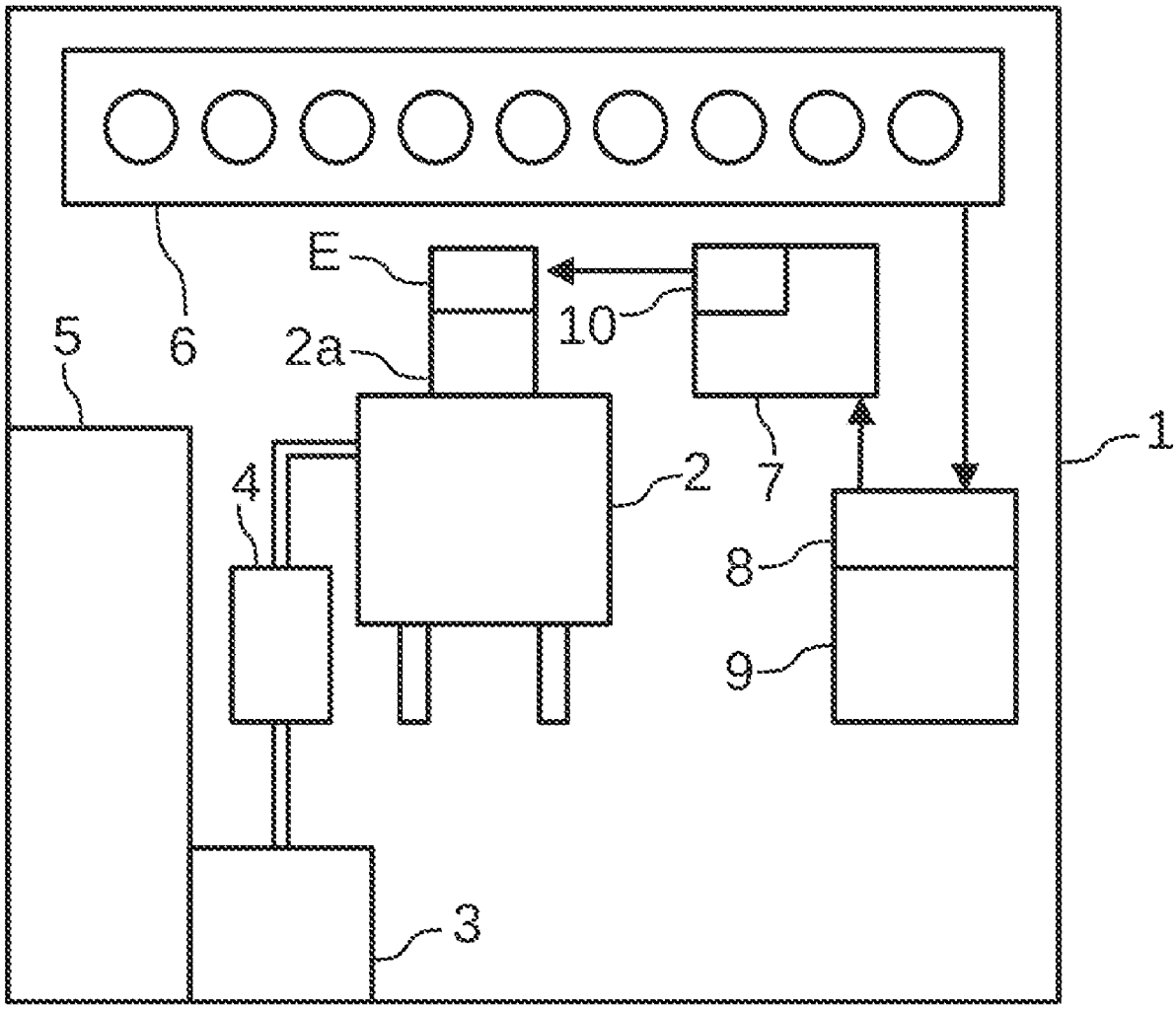
A method for actuating an electric motor includes modulating a drive power provided to the electric motor by using a ramp function for a change in rotational speed of the electric motor from a starting rotational speed to a target rotational speed. The target rotational speed is only reached after at least 200 ms, starting from the starting rotational speed. An apparatus, a fully automatic coffee machine having the apparatus, a computer program product and a computer-readable storage medium are also provided.