US 20240178821A1

(19) United States

(12) Patent Application Publication

Cheng et al.

(10) Pub. No.: US 2024/0178821 A1

(43) Pub. Date: May 30, 2024

(54) **PROCESS VARIATION INDEPENDENT POWER-UP INITIALIZATION CIRCUIT THAT GENERATES POWER-UP INITIALIZATION SIGNAL WITH SELF-SHUT-OFF PULSE AND ASSOCIATED POWER-UP INITIALIZATION METHOD**

(71) Applicant: **MEDIATEK INC.**, Hsin-Chu (TW)

(72) Inventors: **Lik T. Cheng**, San Jose, CA (US); **ZIJIE GUO**, San Jose, CA (US); **Agastya Gogoi**, San Jose, CA (US)

(73) Assignee: **MEDIATEK INC.**, Hsin-chu (TW)

(21) Appl. No.: **18/500,140**

(22) Filed: **Nov. 2, 2023**

Related U.S. Application Data

(60) Provisional application No. 63/384,956, filed on Nov. 24, 2022.

Publication Classification

(51) **Int. Cl.**
H03K 3/012 (2006.01)
H03K 5/133 (2006.01)

(52) **U.S. Cl.**
CPC ***H03K 3/012*** (2013.01); ***H03K 5/133*** (2013.01); *H03K 2005/0015* (2013.01)

(57) **ABSTRACT**
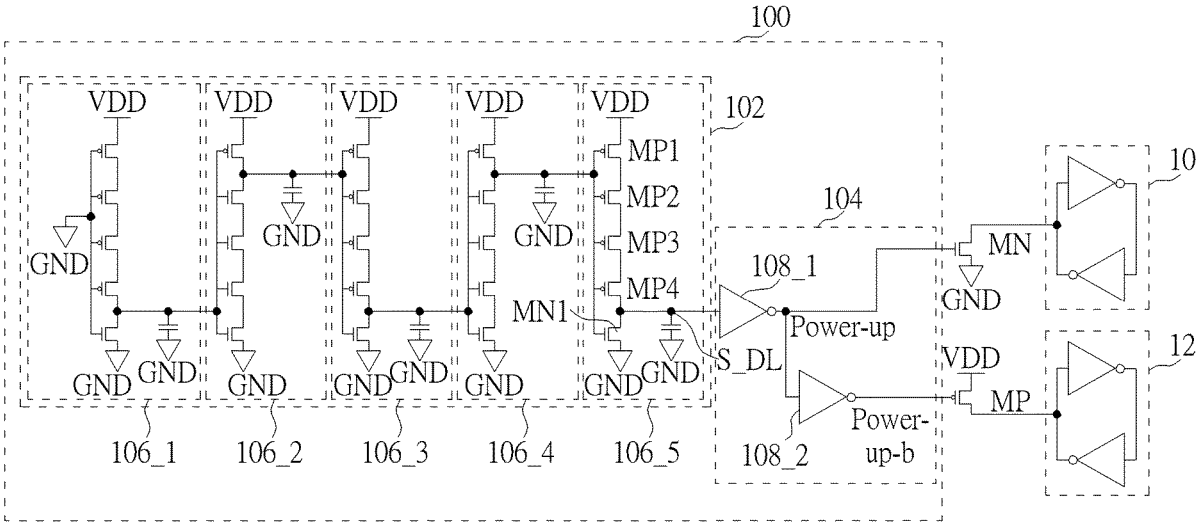
A power-up initialization circuit includes a delay chain circuit and a signal generator circuit. The delay chain circuit receives a power supply voltage, and applies a predetermined delay amount to the power supply voltage for generating a delayed output voltage. The signal generator circuit receives the delayed output voltage from the delay chain circuit, and generates and outputs at least one power-up initialization signal in response to the delayed output voltage.