US 20220369498A1

(19) United States
(12) Patent Application Publication
Kim
(10) Pub. No.: US 2022/0369498 A1
(43) Pub. Date: Nov. 17, 2022

(54) **HEAT SINK WITH PROTRUSIONS ON MULTIPLE SIDES THEREOF AND APPARATUS USING THE SAME**

(71) Applicant: **Gerald Ho Kim**, Spokane, WA (US)

(72) Inventor: **Gerald Ho Kim**, Spokane, WA (US)

(21) Appl. No.: **17/875,596**

(22) Filed: **Jul. 28, 2022**

Related U.S. Application Data

(60) Division of application No. 17/092,301, filed on Nov. 8, 2020, now Pat. No. 11,425,840, which is a continuation of application No. 16/691,394, filed on Nov. 21, 2019, now Pat. No. 10,834,849, which is a division of application No. 16/106,925, filed on Aug. 21, 2018, now abandoned, which is a continuation of application No. 15/459,637, filed on Mar. 15, 2017, now Pat. No. 10,076,059, which is a continuation of application No. 14/507,806, filed on Oct. 6, 2014, now abandoned.

(60) Provisional application No. 61/950,075, filed on Mar. 8, 2014.

Publication Classification

(51) **Int. Cl.**

H05K 7/20	(2006.01)
H05K 1/02	(2006.01)
H01L 23/367	(2006.01)
H01L 23/427	(2006.01)
H01L 23/467	(2006.01)
H01L 29/06	(2006.01)
F28F 3/04	(2006.01)
H05K 5/03	(2006.01)
H05K 5/04	(2006.01)

(52) **U.S. Cl.**

CPC ***H05K 7/2029*** (2013.01); ***H05K 1/0206*** (2013.01); ***H01L 23/367*** (2013.01); ***H01L 23/3675*** (2013.01); ***H01L 23/3677*** (2013.01); ***H01L 23/427*** (2013.01); ***H01L 23/4275*** (2013.01); ***H01L 23/467*** (2013.01); ***H01L 29/0657*** (2013.01); ***H05K 1/0204*** (2013.01); ***H05K 1/0209*** (2013.01); ***F28F 3/048*** (2013.01); ***H05K 5/03*** (2013.01); ***H05K 5/04*** (2013.01); *H01L 23/13* (2013.01)

(57) **ABSTRACT**
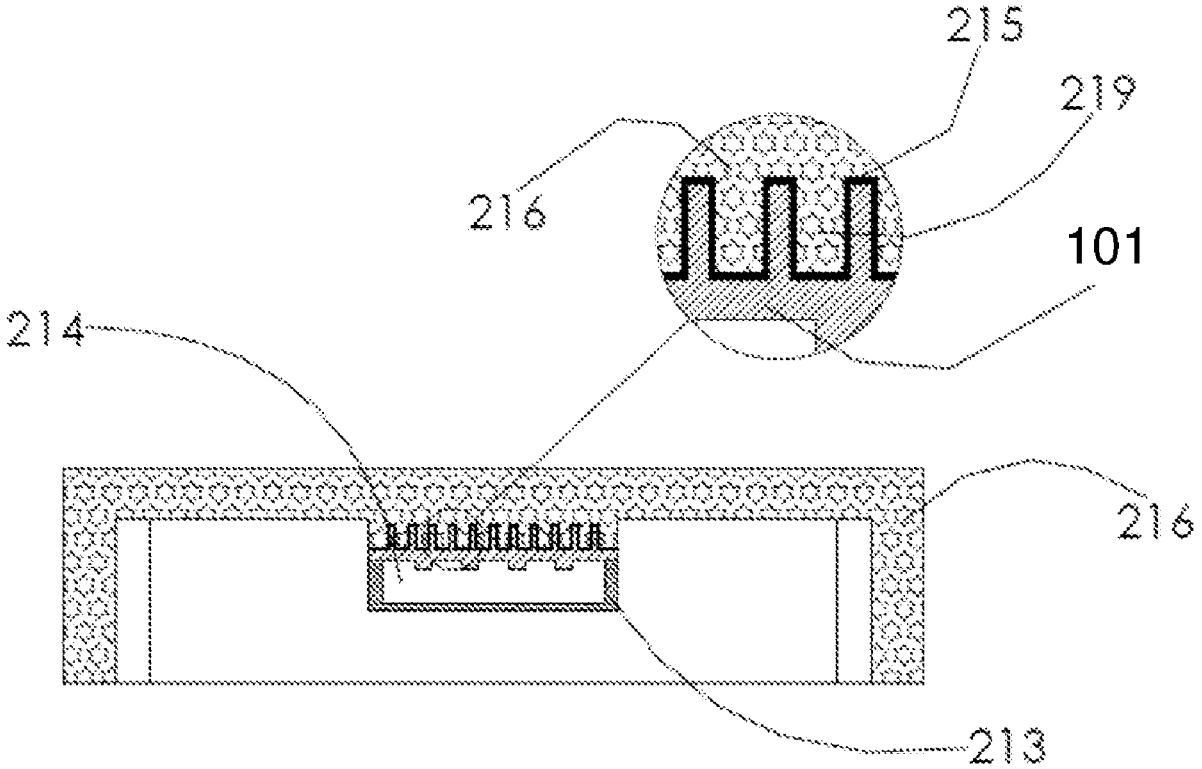
A thermal management unit includes a heat sink, which includes a base portion having a first side and a second side opposite the first side. The heat sink also includes a first protrusion structure and a second protrusion structure. The first protrusion structure protrudes from the first side of the base portion, and the first protrusion structure includes a plurality of fins. The second protrusion structure protrudes from the second side of the base portion, and the second protrusion structure includes a plurality of ribs.