US 20240213394A1

(19) United States

(12) Patent Application Publication

CORNAGLIOTTI et al.

(10) Pub. No.: US 2024/0213394 A1

(43) Pub. Date: Jun. 27, 2024

(54) METHOD FOR LAMINATING SOLAR CELLS

(71) Applicant: **LIGHTYEAR LAYER IPCO B.V.**, Helmond (NL)

(72) Inventors: **Emanuele CORNAGLIOTTI**, Uccle (BE); **Simone REGONDI**, Eindhoven (NL); **Dario DI CARLO RASI**, Helmond (NL)

(21) Appl. No.: **18/555,833**

(22) PCT Filed: **Apr. 14, 2022**

(86) PCT No.: **PCT/EP2022/060109**

§ 371 (c)(1),
(2) Date: **Oct. 17, 2023**

(30) **Foreign Application Priority Data**

Apr. 18, 2021 (NL) ..... 2028006

**Publication Classification**

(51) **Int. Cl.**

| | |
|---|---|
| ***H01L 31/18*** | (2006.01) |
| ***H01L 31/048*** | (2006.01) |
| ***H01L 31/05*** | (2006.01) |

(52) **U.S. Cl.**

CPC ..... ***H01L 31/18*** (2013.01); ***H01L 31/0481*** (2013.01); ***H01L 31/0516*** (2013.01)

(57) **ABSTRACT**
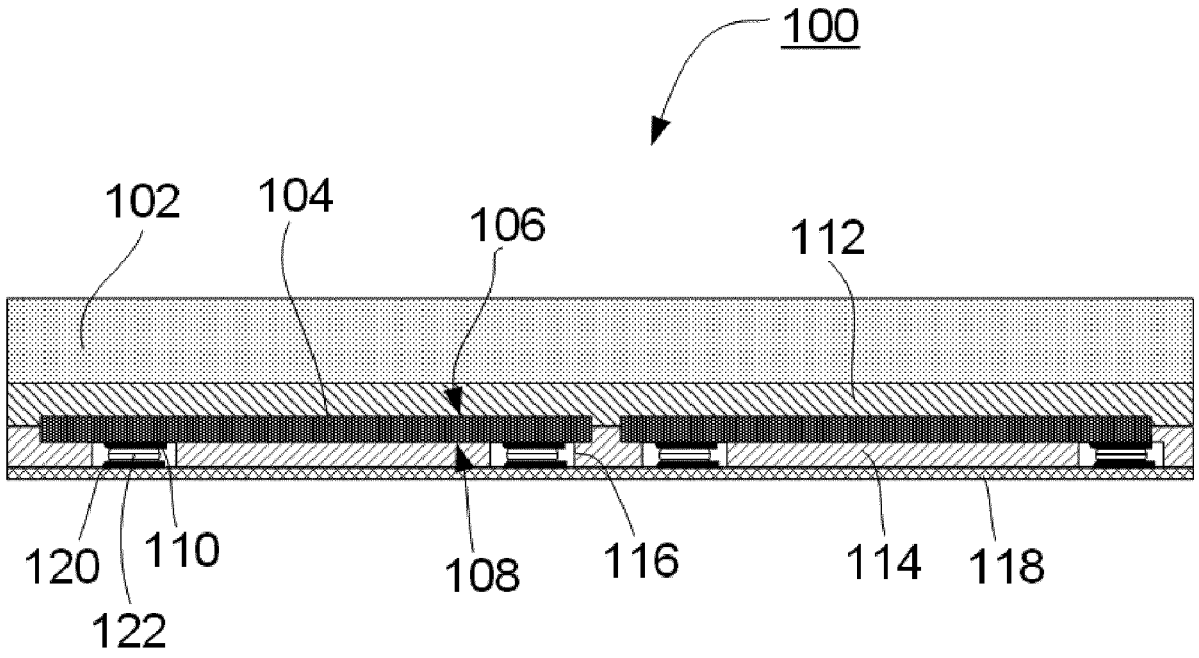
The invention pertains to a method for laminating solar cells, comprising: attaching a first side encapsulant (**114**) to solar cells, which first side encapsulant is made of a first encapsulant material, the first side encapsulant being attached to one of the photosensitive side and the backside of the solar cells forming at least a part of a stack by, after attaching the first side encapsulant to the solar cells, attaching a second side encapsulant (**112**) to the other one of the photosensitive side and the backside of the solar cells, the second side encapsulant (**114**) being made of a second encapsulant material which is different from the first encapsulant material, and wherein the first encapsulant material has a change of dimensions which is less than the change of dimensions of the second encapsulant material.