REVISION RECORD			
LTR	ECO NO:	APPROVED:	DATE:

display

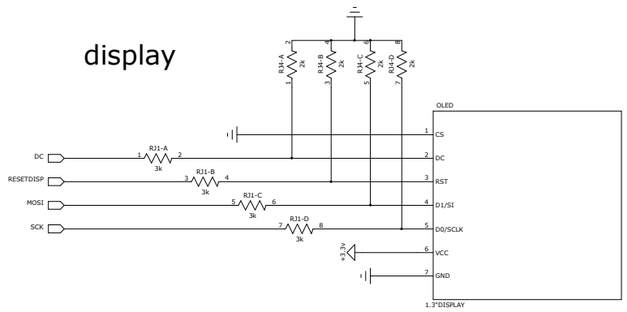

atmega328p

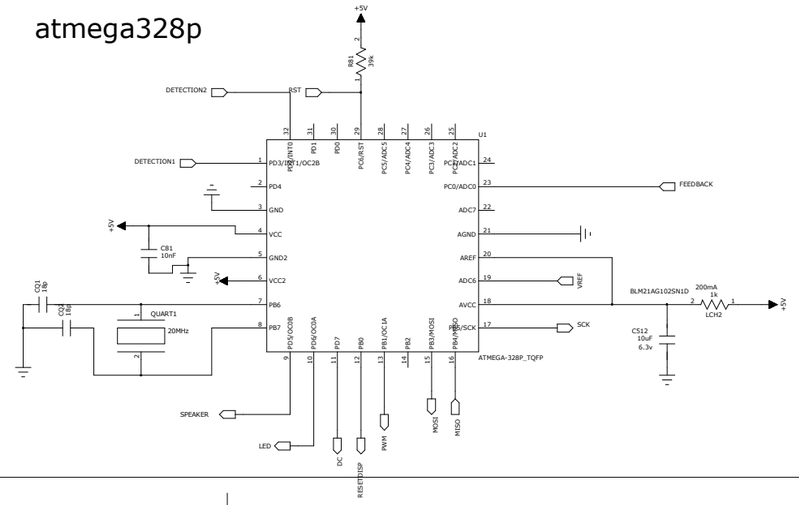

SPI prog

vref

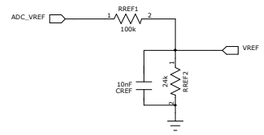

speaker

EITHER

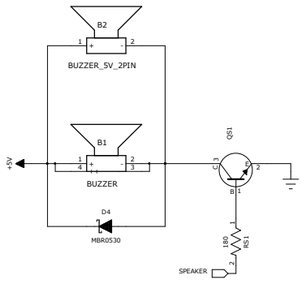

wireless charger and usb power connection

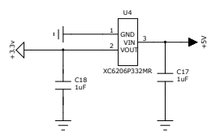

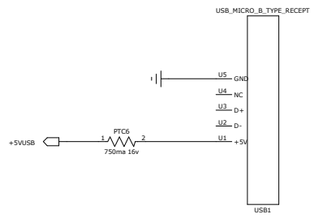

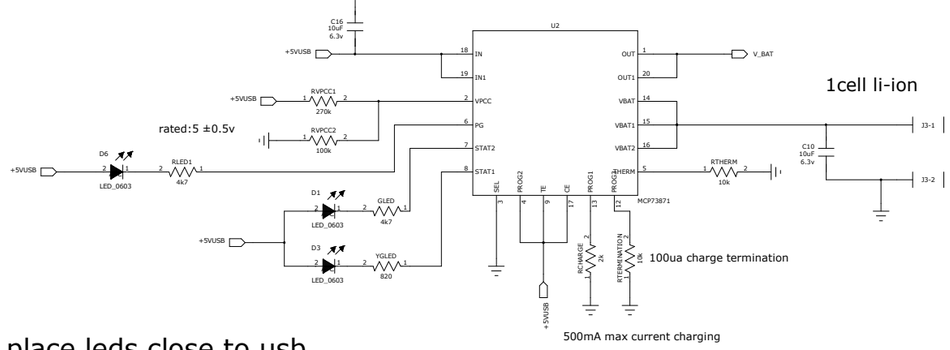

rated:5 ±0.5v

1cell li-ion

100ua charge termination

500mA max current charging

place leds close to usb

stdby:300uA

2x SBM-20, 5v to 400v boost

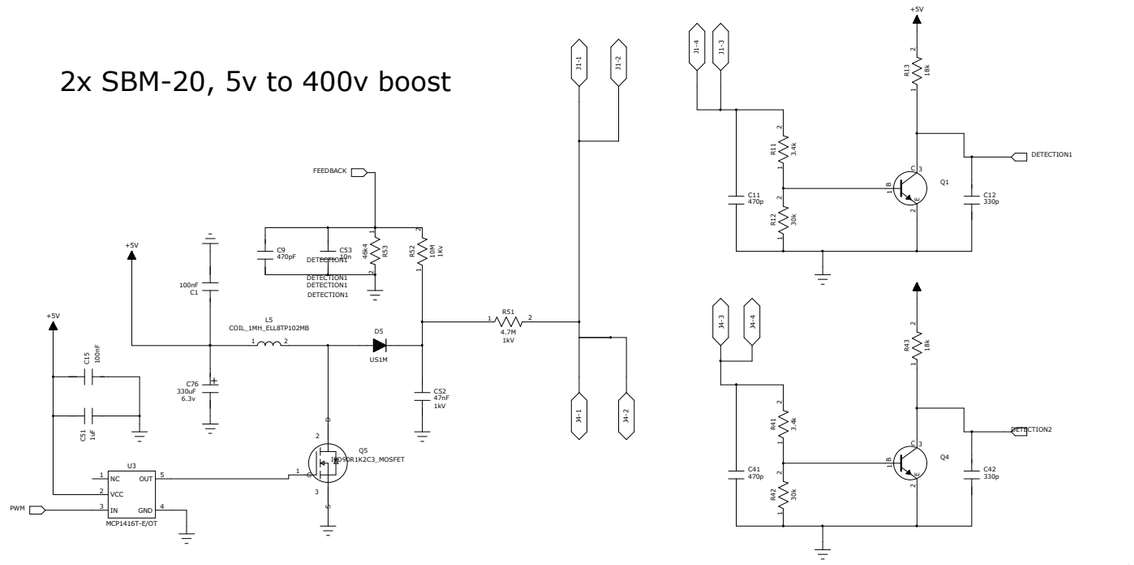

5v boost, press-on/hold-off normally open button

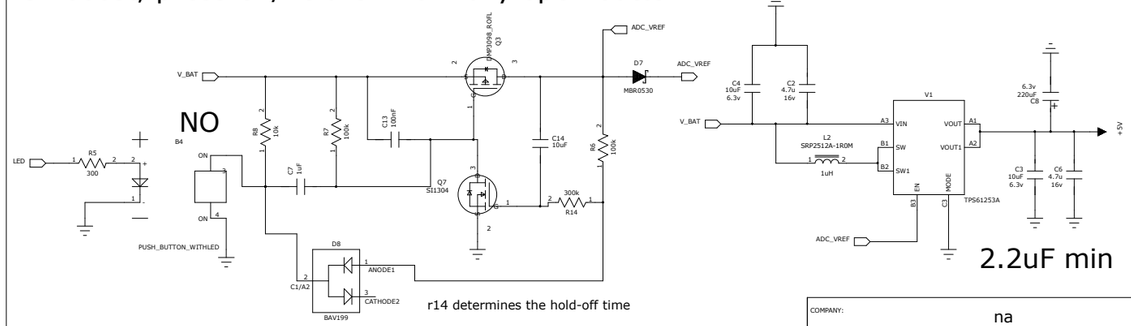

r14 determines the hold-off time

2.2uF min

COMPANY: na			
TITLE: Geiger Counter with wireless charger			
DRAWN: Panu Leinonen	DATED: 20.3.2018	CODE:	SIZE: A1 / DRAWING NO: 4 / REV: b
CHECKED:	DATED:		
QUALITY CONTROL:	DATED:		
RELEASED: 27.4.2018	DATED:	SCALE: 1:2	SHEET: 1 OF 1