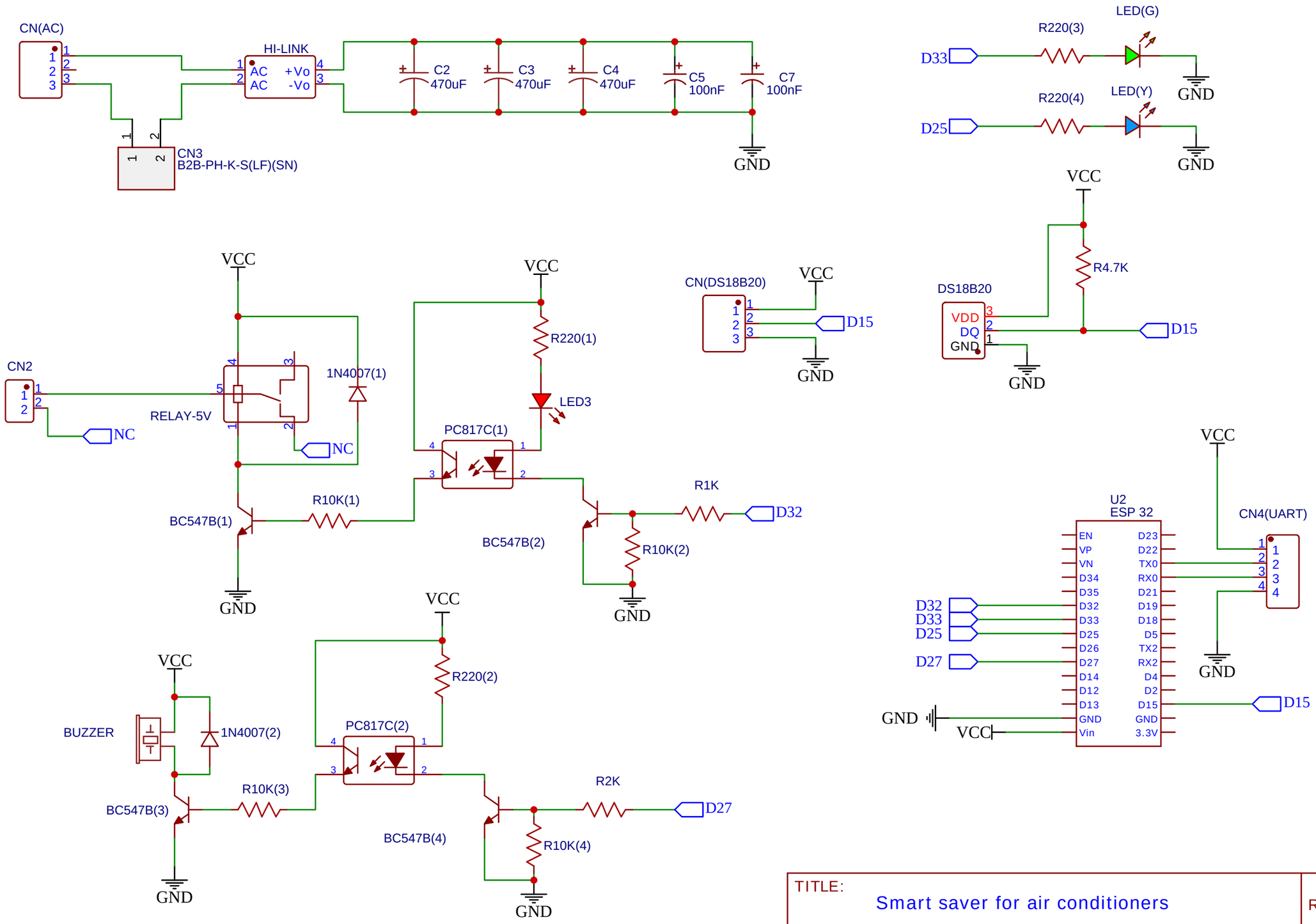

TITLE: Smart saver for air conditioners		REV: 1.0
EasyEDA	Company: STTSLIFE	Sheet: 1/1
	Date: 2021-11-24 Drawn By: phanuwat kawila	