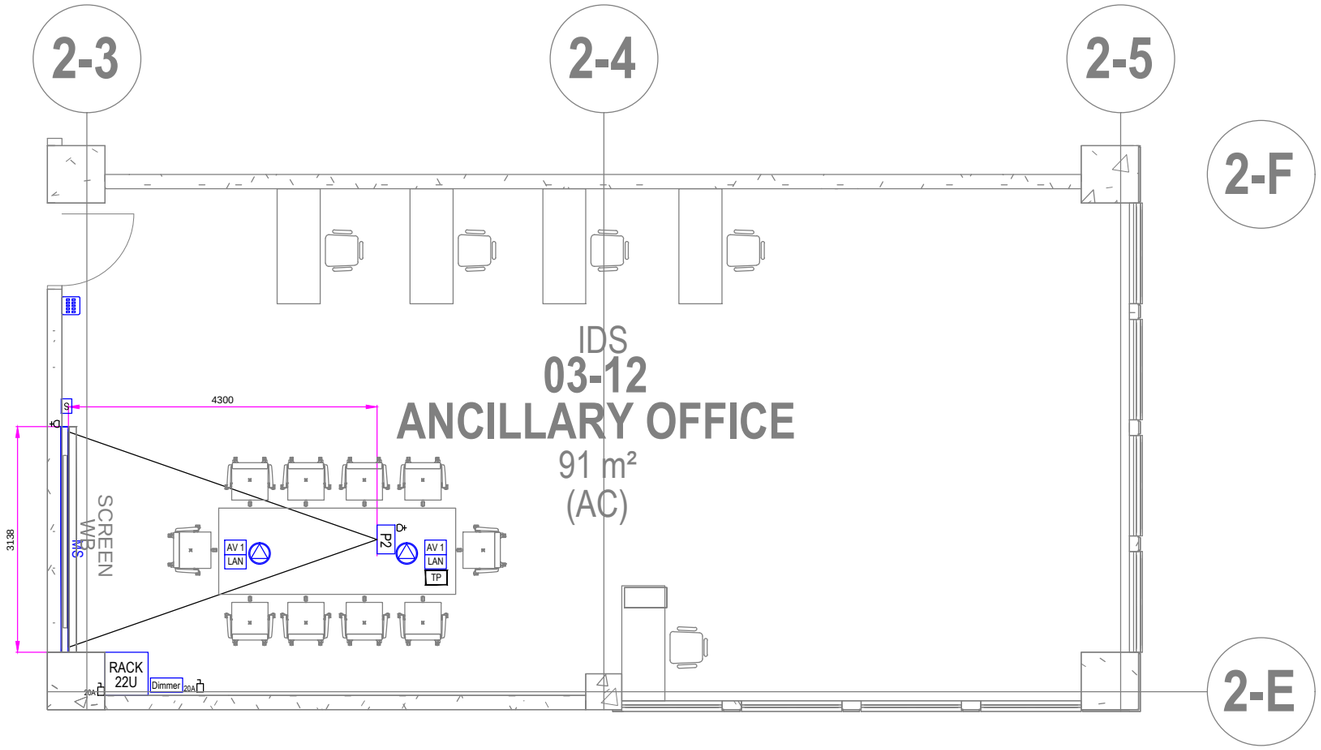

BLK 2 - LEVEL 3 ANCILLARY OFFICE 03-12
SCALE 1:100

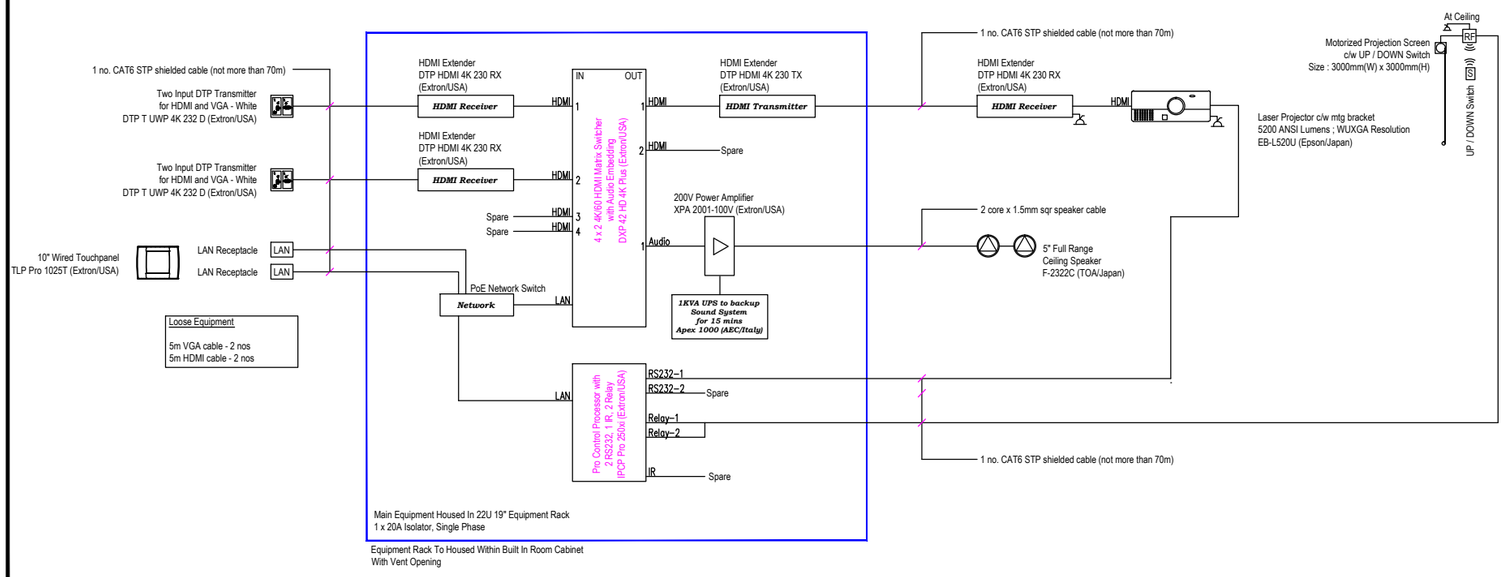

AUDIO VISUAL SYSTEM
BLK 2 - LEVEL 3 ANCILLARY OFFICE 03-12

LEGEND & SYMBOL

P2	LASER PROJECTOR C/W MTG BRACKET 5200 ANSI LUMENS ; WUXGA RESOLUTION EB-L520U (EPSON/JAPAN) DIM : 440(W) x 122(H) x 304(D)mm
MS	MOTORISED SCREEN - 3000(W) X 3000(H) IMAGE SIZE : 3000(W) X 1685(H), 16:9 CLASS 10 (LAV/SINGAPORE) CASING DIM : 3138(W) x 156(H) x 134(D)mm
	5" FULL RANGE CEILING SPEAKER, 30W/100V F-2322C (TOA/JAPAN) DIM : 230(DIA) x 200(H)mm
AV 1	TWO INPUT DTP TRANSMITTER FOR HDMI & VGA DTP T UWP 4K 232 D (EXTRON/USA) DIM : 89(W) x 107(H) x 48(D)mm
LAN	LAN RECEPTACLE SINGLE GANG SIZE
S	UP/DOWN SWITCH SINGLE GANG SIZE
RACK 22U	19" EQUIPMENT RACK DIM : 600(W) x 1180-22U(H) x 600(D)mm
TP	10" WIRED TOUCHPANEL TLP PRO 1025T (EXTRON/USA) DIM : 257(W) x 174(H) x 105(D)mm
	13A 1-GANG SWITCH SOCKET OUTLET
20A	20A ISOLATOR

AS BUILT DRAWING

DEVELOPER:
DSTA Defence Science & Technology Agency

VYNNA PEH SEOH CHIN
HCD (Army Camps)

Edmund Teo Kuan Wei
Senior Programme Manager

Project No.: D2019-00162

D&B MAIN CONTRACTOR;
DEENN ENGINEERING PTE LTD
29 Harrison Road, Lian Beng Building , Singapore 369648
TEL. No.6283 1468 FAX No. 6280 9360
e-mail : lianbengconstn@pacific.net.sg
Website: www.lianbeng.com.sg

ARCHITECT CONSULTANT:
ID ARCHITECTS PTE LTD
3 HarbourFront Place, #03-01
HarbourFront Tower Two
Singapore 099254
Tel: 6225 6011 Fax: 6225 6022
Email: general@idarchitects.com.sg
www.idarchitects.com.sg

STRUCTURE CONSULTANT:
TW-ASIA Consultants Pte Ltd
[illegible]

M&E Consultant:
Pdc Consultants Pte Ltd
MECHANICAL • ELECTRICAL
23 New Industrial Road #06-03
Solstice Business Center
Singapore 536209
t : 6444 7748 f: 6444 7141
e : contact@pdcengrs.com

Sub Contractor:
CHIN SENG ENGINEERING (S) PTE LTD
33 Ubi Avenue 3, Vertex Tower B, #08-27, Singapore 408868
TEL: 6742 9392 FAX: 6742 9390

Project Title:
PROPOSED ADDITIONS OF 1 BLOCK OF 3-STOREY OFFICE BUILDING BLK 2, 1 BLOCK OF 6-STOREY ACCOMMODATION BUILDING BLK 3 (11), 1 BLOCK OF 4-STOREY ACCOMMODATION BUILDING BLK 4 (10), 1 BLOCK OF 2-STOREY TRAINING MULTIPLEX BLK 9 (6), 1 BLOCK OF MSVS BLK 10 (9), AND ANCILLARY FACILITIES BLK 5, 6(4) & 8 TO EXISTING DIEPPE BARRACK ON LOT 05019M MK13 AT SEMBAWANG ROAD (MANDAI PLANNING AREA)

Drawing Title:
AUDIO VISUAL SYSTEM
BLOCK 2 - ANCILLARY LEVEL 3 OFFICE 03-12

	Initial	Date	Job ref no.	
Designed	JEFFREY	08/09/2023		
Checked	JEFFREY	08/09/2023		
Drawn	KHANG	08/09/2023	Filename	
Software	CAD			
Scale	AS SHOWN		Sources	

Drawing no.
D2019-00162/ELECT/BLK2/AV/08

THIS DRAWING IS COPYRIGHT
THIS DRAWING IS THE PROPERTY OF DSTA. IF FOUND, PLEASE RETURN TO DSTA BUILDING AND INFRASTRUCTURE PROGRAMME CENTRE, 1 DEPOT ROAD, SINGAPORE 109679.
REPRODUCTION OF DRAWING WITHOUT THE WRITTEN PERMISSION OF DSTA BI IS STRICTLY PROHIBITED. ANY UNAUTHORIZED REPRODUCTION OR POSSESSION SHALL BE DEALT WITH UNDER THE OFFICIAL SECRETS ACT.