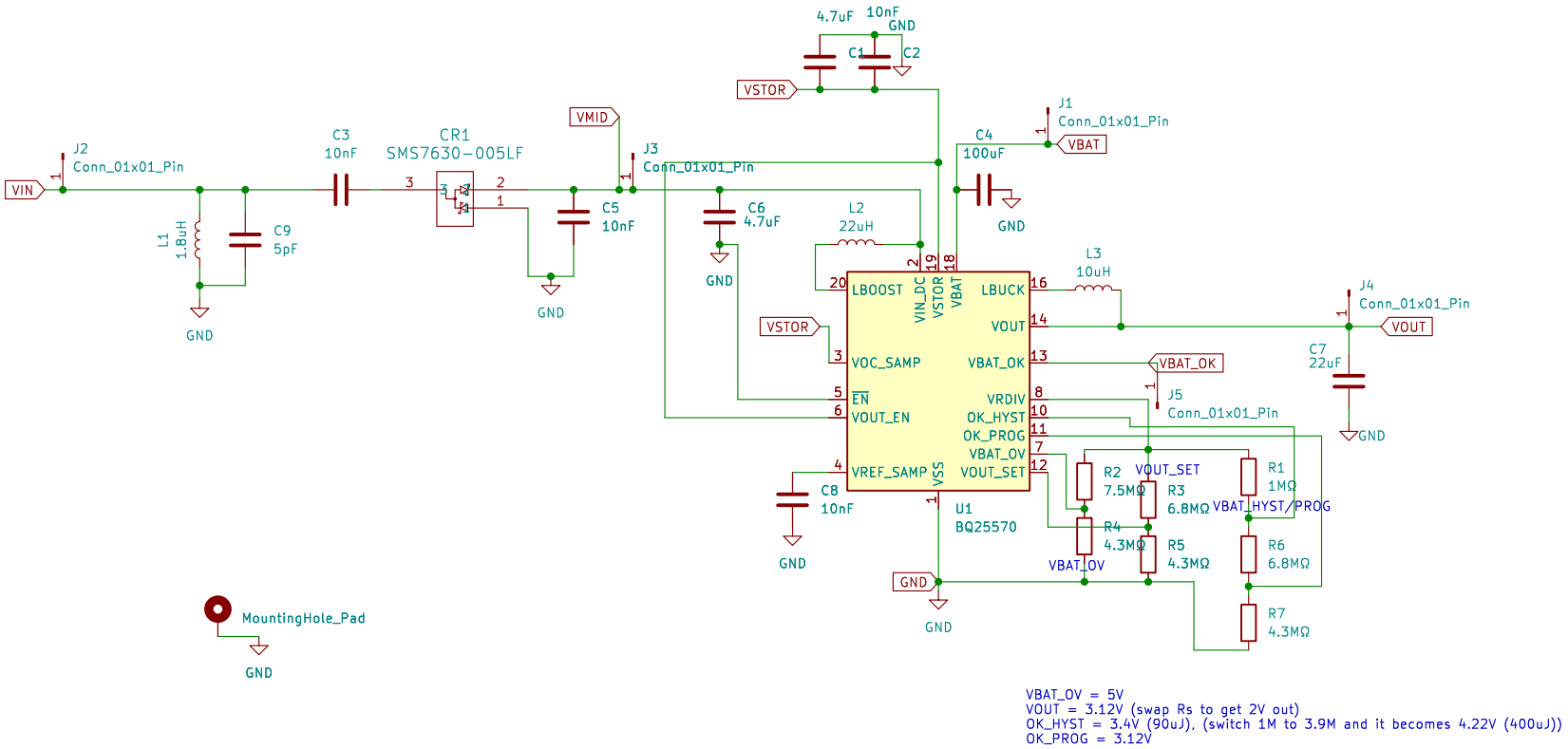

VBAT_OV = 5V
VOUT = 3.12V (swap Rs to get 2V out)
OK_HYST = 3.4V (90uJ), (switch 1M to 3.9M and it becomes 4.22V (400uJ))
OK_PROG = 3.12V

Sheet: /
File: pos_rev4_small.kicad_sch

Title:

Size: A4	Date:	**Rev:**
KiCad E.D.A. 8.0.5		Id: 1/1