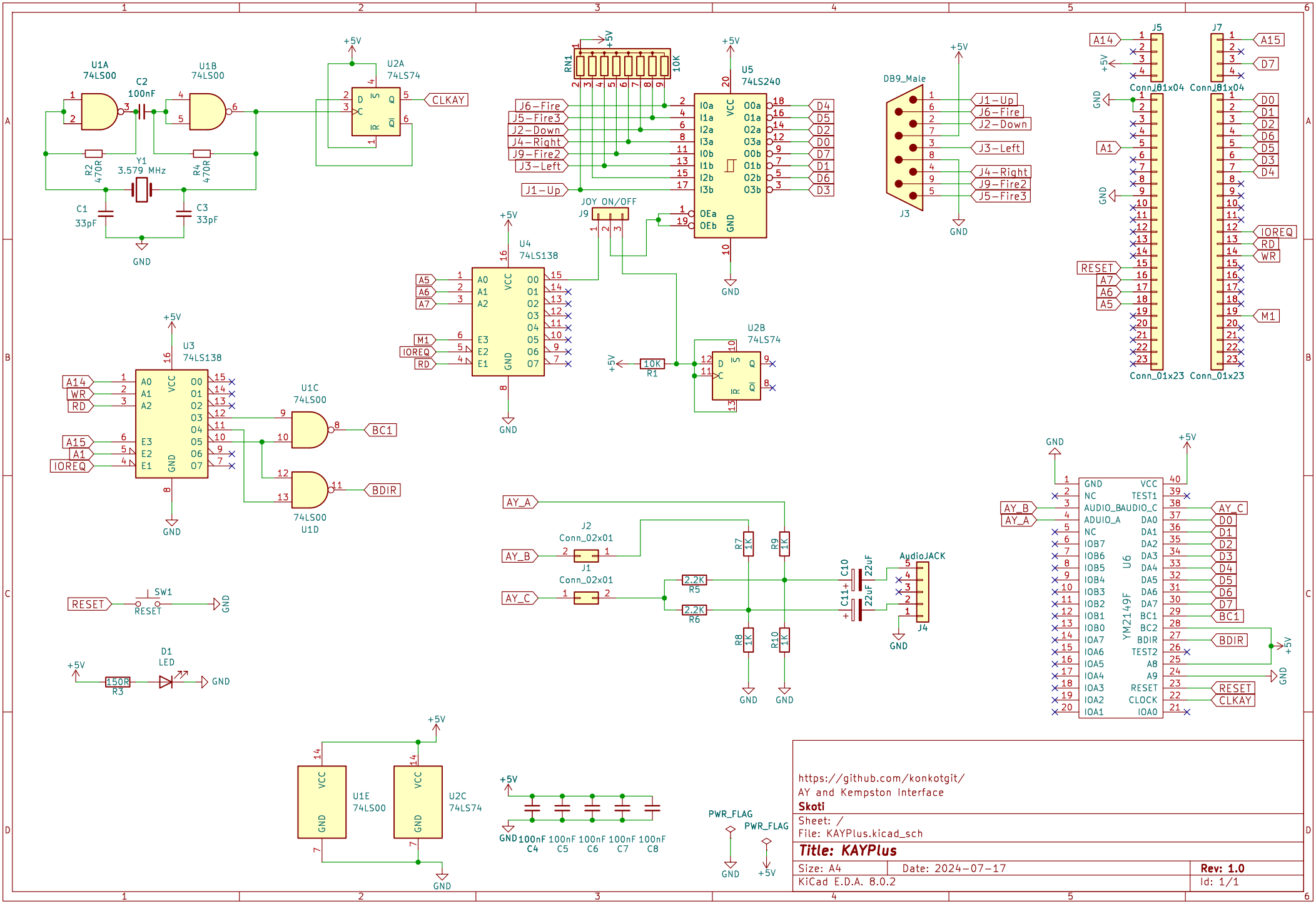
U1A
74LS00
U1B
74LS00
C2
100nF
R2
470R
R4
470R
Y1
3.579 MHz
C1
33pF
C3
33pF
GND
+5V
U2A
74LS74
CLKAY
RN1
10K
U5
74LS240
J6-Fire
J5-Fire3
J2-Down
J4-Right
J9-Fire2
J3-Left
J1-Up
D4
D5
D2
D0
D7
D1
D6
D3
JOY ON/OFF
J9
U4
74LS138
A5
A6
A7
M1
IOREQ
RD
U2B
74LS74
10K
R1
DB9_Male
J3
J1-Up
J6-Fire
J2-Down
J3-Left
J4-Right
J9-Fire2
J5-Fire3
J5
J7
A14
A15
A1
RESET
Conn_01x04
Conn_01x23
U3
74LS138
WR
BC1
BDIR
U1C
74LS00
U1D
74LS00
SW1
RESET
D1
LED
150R
R3
AY_A
AY_B
AY_C
J2
Conn_02x01
J1
Conn_02x01
R7
1K
R9
1K
R8
1K
R10
1K
2.2K
R5
2.2K
R6
C10
22uF
C11
22uF
AudioJACK
J4
U6
YM2149F
AUDIO_B
AUDIO_C
ADUIO_A
TEST1
TEST2
CLOCK
U1E
74LS00
U2C
74LS74
VCC
100nF
C4
C5
C6
C7
C8
PWR_FLAG
https://github.com/konkotgit/
AY and Kempston Interface
Skoti
Sheet: /
File: KAYPlus.kicad_sch
Title: KAYPlus
Size: A4
Date: 2024-07-17
Rev: 1.0
KiCad E.D.A. 8.0.2
Id: 1/1