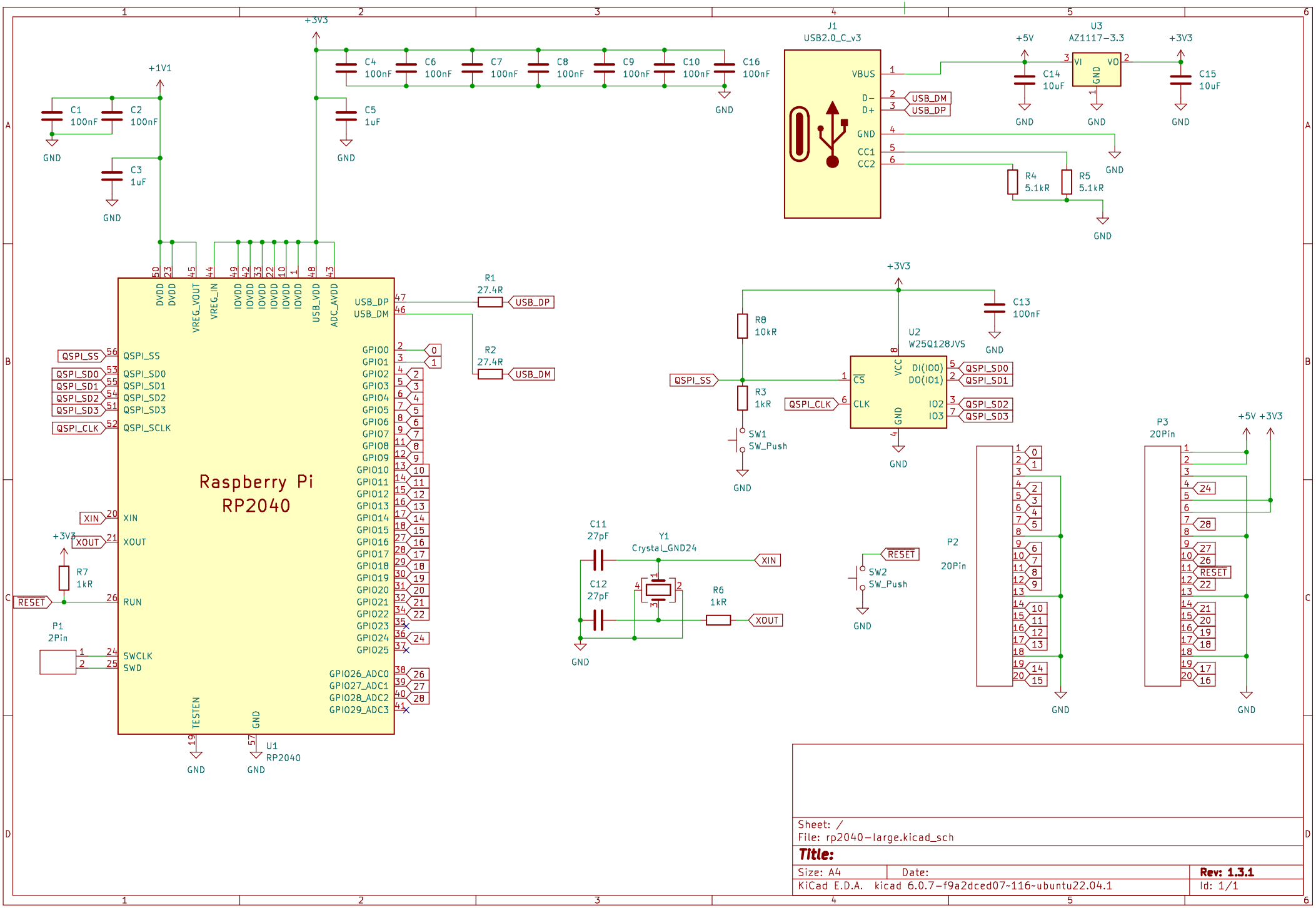
Raspberry Pi
RP2040
U1
RP2040
J1
USB2.0_C_v3
U3
AZ1117-3.3
U2
W25Q128JVS
P1
2Pin
P2
20Pin
P3
20Pin
Y1
Crystal_GND24
SW1
SW_Push
SW2
SW_Push
+3V3
+1V1
+5V
GND
C1 100nF
C2 100nF
C3 1uF
C4 100nF
C5 1uF
C6 100nF
C7 100nF
C8 100nF
C9 100nF
C10 100nF
C16 100nF
C14 10uF
C15 10uF
C13 100nF
C11 27pF
C12 27pF
R1 27.4R
R2 27.4R
R3 1kR
R4 5.1kR
R5 5.1kR
R6 1kR
R7 1kR
R8 10kR
USB_DP
USB_DM
QSPI_SS
QSPI_SD0
QSPI_SD1
QSPI_SD2
QSPI_SD3
QSPI_CLK
XIN
XOUT
RESET
Sheet: /
File: rp2040-large.kicad_sch
Title:
Size: A4
Date:
Rev: 1.3.1
KiCad E.D.A. kicad 6.0.7-f9a2dced07~116~ubuntu22.04.1
Id: 1/1