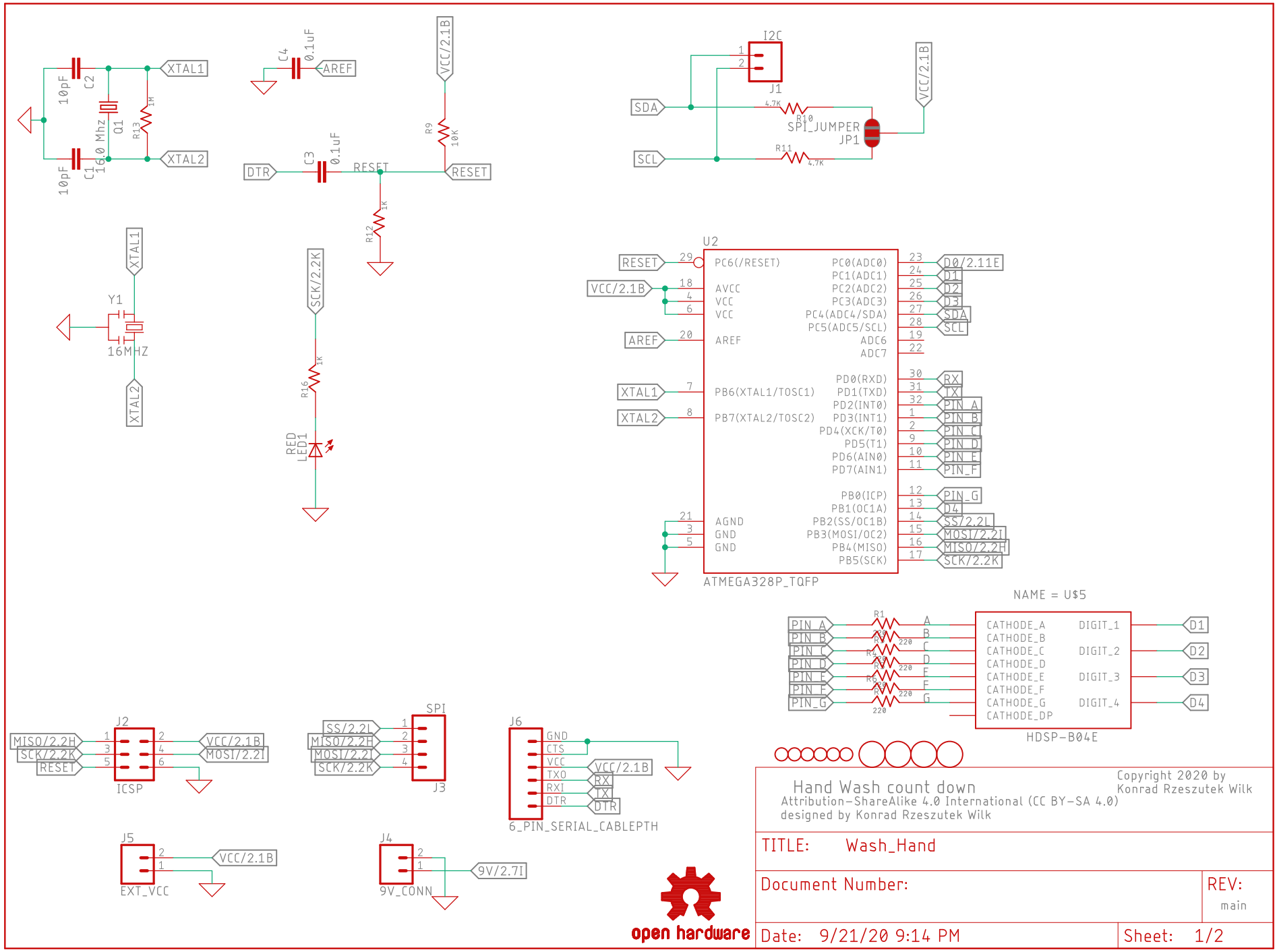
XTAL1
XTAL2
10pF C2
10pF C1
16.0 Mhz Q1
R13 1M
C4 0.1uF
AREF
VCC/2.1B
R9 10K
DTR
C3 0.1uF
RESET
R12 1K
I2C
J1
SDA
SCL
R10 4.7K
R11 4.7K
SPI_JUMPER
JP1
Y1
16MHZ
SCK/2.2K
R16 1K
RED
LED1
U2
PC6(/RESET)
AVCC
VCC
AREF
PB6(XTAL1/TOSC1)
PB7(XTAL2/TOSC2)
AGND
GND
PC0(ADC0)
PC1(ADC1)
PC2(ADC2)
PC3(ADC3)
PC4(ADC4/SDA)
PC5(ADC5/SCL)
ADC6
ADC7
PD0(RXD)
PD1(TXD)
PD2(INT0)
PD3(INT1)
PD4(XCK/T0)
PD5(T1)
PD6(AIN0)
PD7(AIN1)
PB0(ICP)
PB1(OC1A)
PB2(SS/OC1B)
PB3(MOSI/OC2)
PB4(MISO)
PB5(SCK)
D0/2.11E
D1
D2
D3
RX
TX
PIN_A
PIN_B
PIN_C
PIN_D
PIN_E
PIN_F
PIN_G
D4
SS/2.2L
MOSI/2.2I
MISO/2.2H
ATMEGA328P_TQFP
NAME = U$5
R1 220
R2 220
R3 220
R4 220
R5 220
R6 220
CATHODE_A
CATHODE_B
CATHODE_C
CATHODE_D
CATHODE_E
CATHODE_F
CATHODE_G
CATHODE_DP
DIGIT_1
DIGIT_2
DIGIT_3
DIGIT_4
D1
D2
D3
D4
HDSP-B04E
J2
MISO/2.2H
SCK/2.2K
RESET
VCC/2.1B
MOSI/2.2I
ICSP
SPI
SS/2.2L
MISO/2.2H
MOSI/2.2I
SCK/2.2K
J3
J6
GND
CTS
VCC
TXO
RXI
DTR
VCC/2.1B
RX
TX
DTR
6_PIN_SERIAL_CABLEPTH
J5
VCC/2.1B
EXT_VCC
J4
9V/2.7I
9V_CONN
open hardware
Hand Wash count down
Copyright 2020 by
Konrad Rzeszutek Wilk
Attribution-ShareAlike 4.0 International (CC BY-SA 4.0)
designed by Konrad Rzeszutek Wilk
TITLE: Wash_Hand
Document Number:
REV:
main
Date: 9/21/20 9:14 PM
Sheet: 1/2

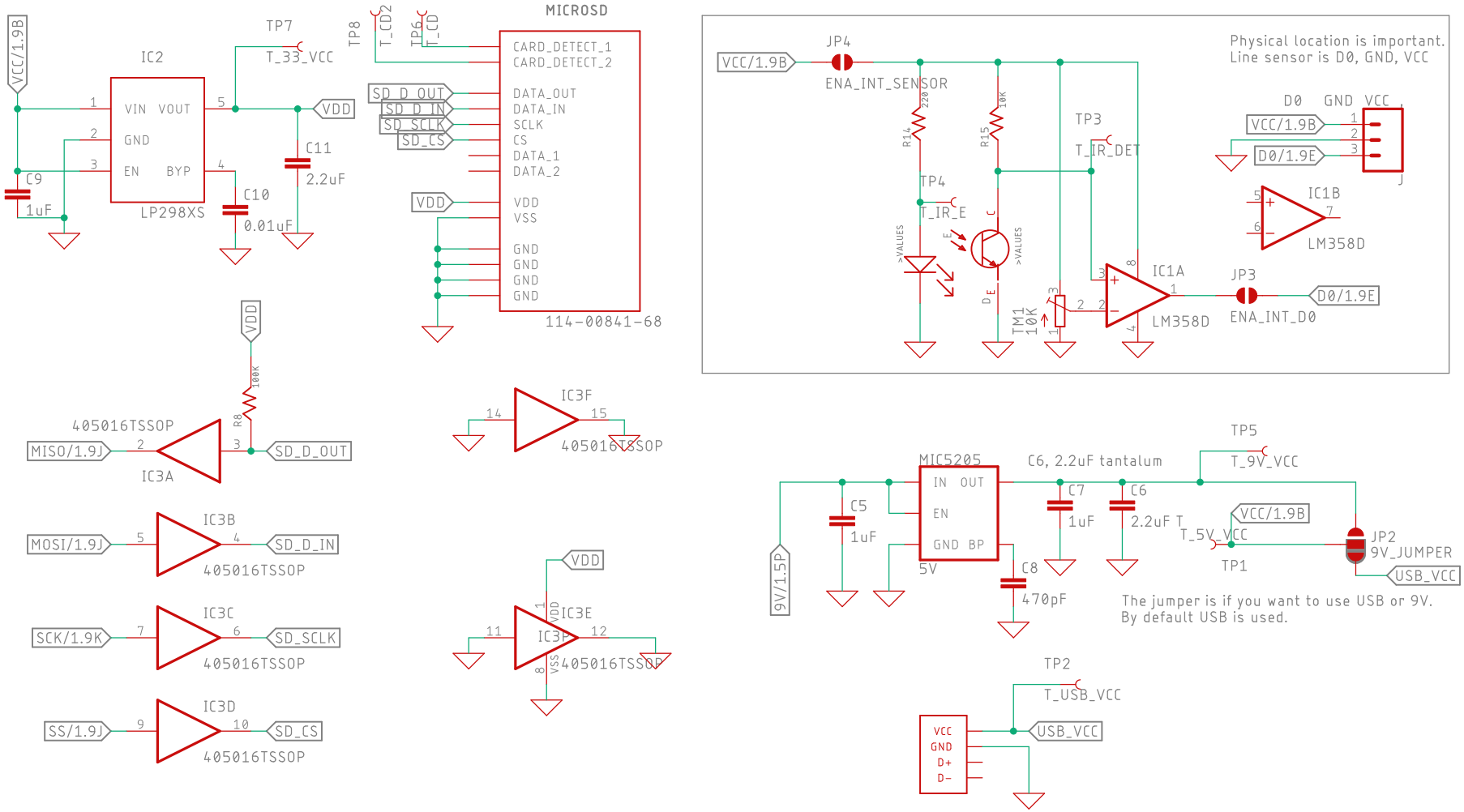

Hand Wash count down

Copyright 2020 by
Konrad Rzeszutek Wilk
Attribution-ShareAlike 4.0 International (CC BY-SA 4.0)
designed by Konrad Rzeszutek Wilk

TITLE: Wash_Hand

Document Number:

REV: main

Date: 9/21/20 9:14 PM

Sheet: 2/2

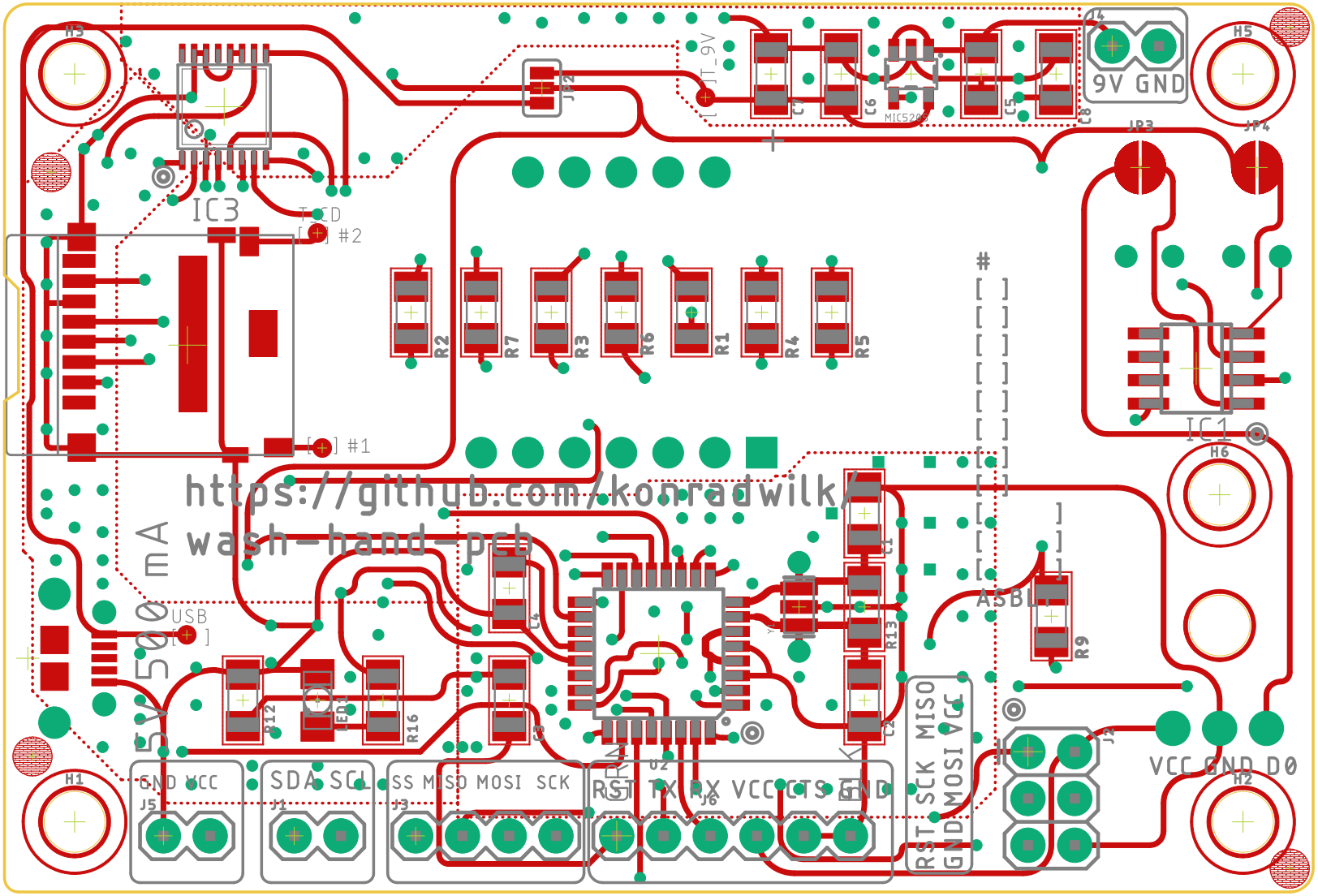
https://github.com/konradwilk/
wash-hand-pcb
5V 500 mA
USB
IC3
IC1
9V GND
VCC GND D0
GND VCC
SDA SCL
SS MISO MOSI SCK
RST TX RX VCC CTS GND
RST SCK MISO
GND MOSI VCC
ASBL
TCD
#1
#2
H1
H2
H3
H4
H5
H6
J1
J2
J3
J4
J5
J6
JP3
JP4
R1
R2
R3
R4
R5
R6
R7
R9
R12
R13
R16
C1
C2
C3
C4
C5
C6
C7
C8
U2
MIC5205

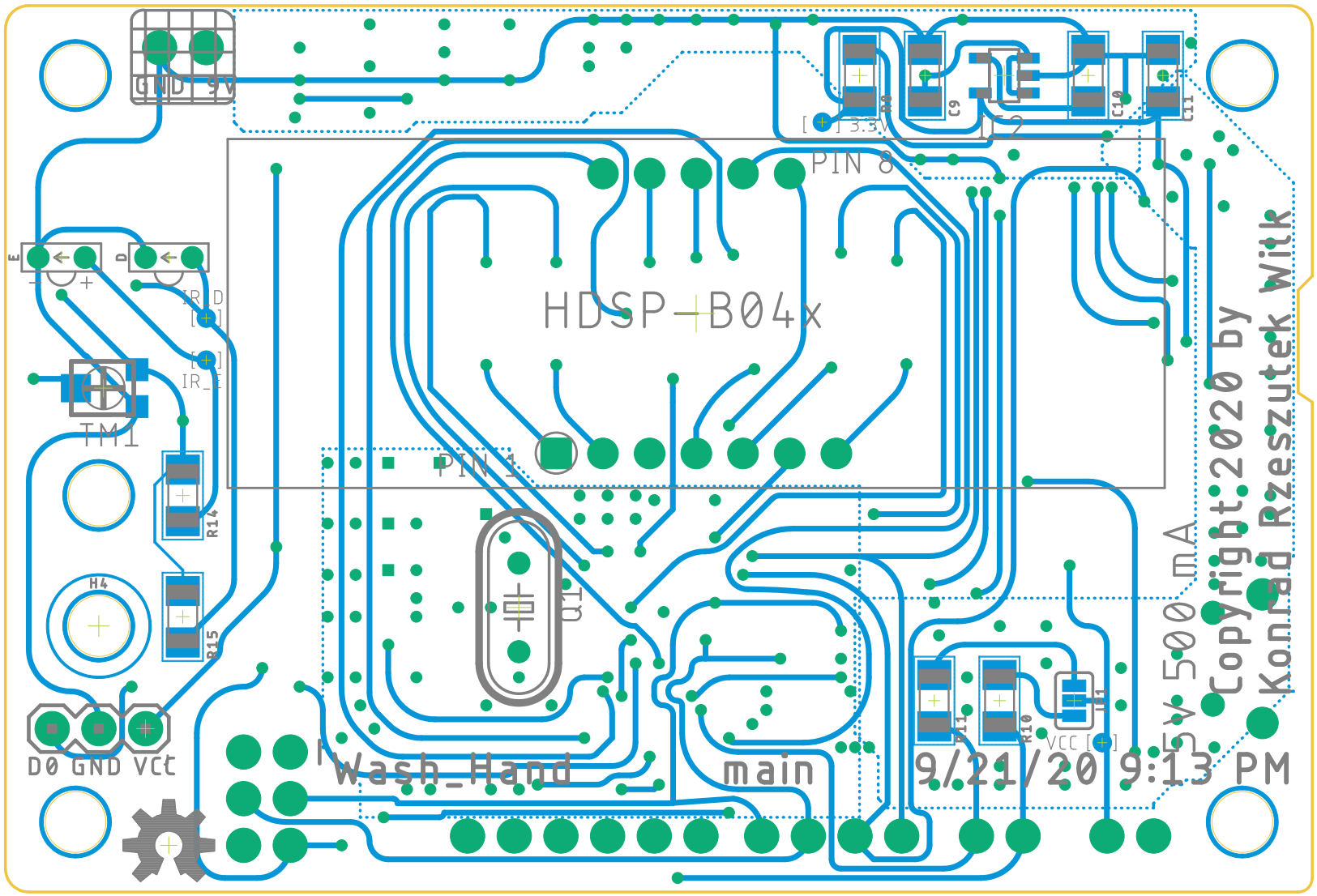
GND 9V
3.3V
PIN 8
HDSP-B04x
PIN 1
IR_D
IR_E
TM1
R14
R15
H4
Q1
D0 GND VCC
Wash_Hand
main
R11
R10
VCC
5V 500 mA
9/21/20 9:13 PM
Copyright:2020 by
Konrad Rzeszutek Wilk