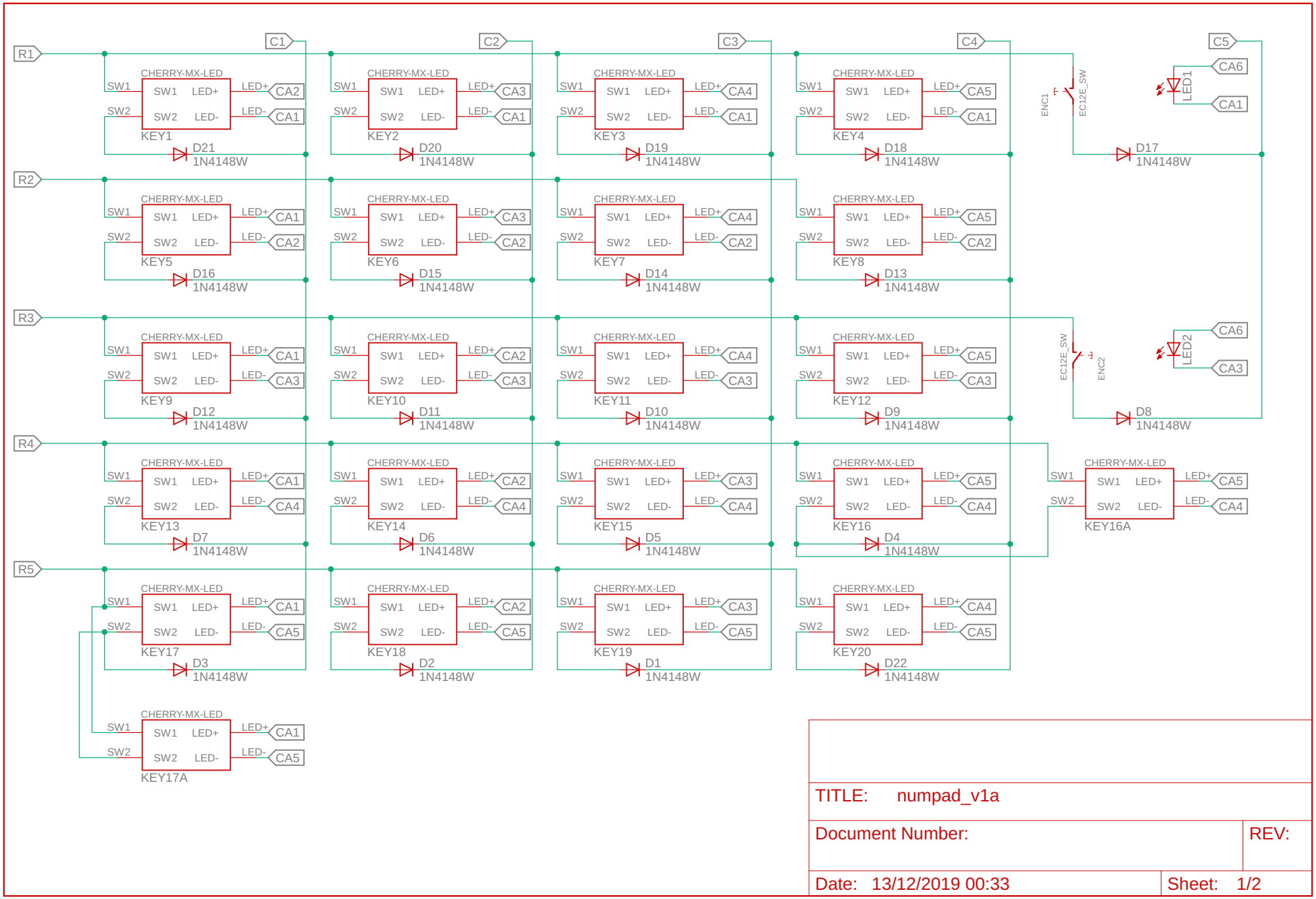
R1
R2
R3
R4
R5
C1
C2
C3
C4
C5
CHERRY-MX-LED
SW1
SW2
LED+
LED-
KEY1
KEY2
KEY3
KEY4
KEY5
KEY6
KEY7
KEY8
KEY9
KEY10
KEY11
KEY12
KEY13
KEY14
KEY15
KEY16
KEY16A
KEY17
KEY17A
KEY18
KEY19
KEY20
CA1
CA2
CA3
CA4
CA5
CA6
D21 1N4148W
D20 1N4148W
D19 1N4148W
D18 1N4148W
D17 1N4148W
D16 1N4148W
D15 1N4148W
D14 1N4148W
D13 1N4148W
D12 1N4148W
D11 1N4148W
D10 1N4148W
D9 1N4148W
D8 1N4148W
D7 1N4148W
D6 1N4148W
D5 1N4148W
D4 1N4148W
D3 1N4148W
D2 1N4148W
D1 1N4148W
D22 1N4148W
ENC1
ENC2
EC12E_SW
LED1
LED2
TITLE: numpad_v1a
Document Number:
REV:
Date: 13/12/2019 00:33
Sheet: 1/2

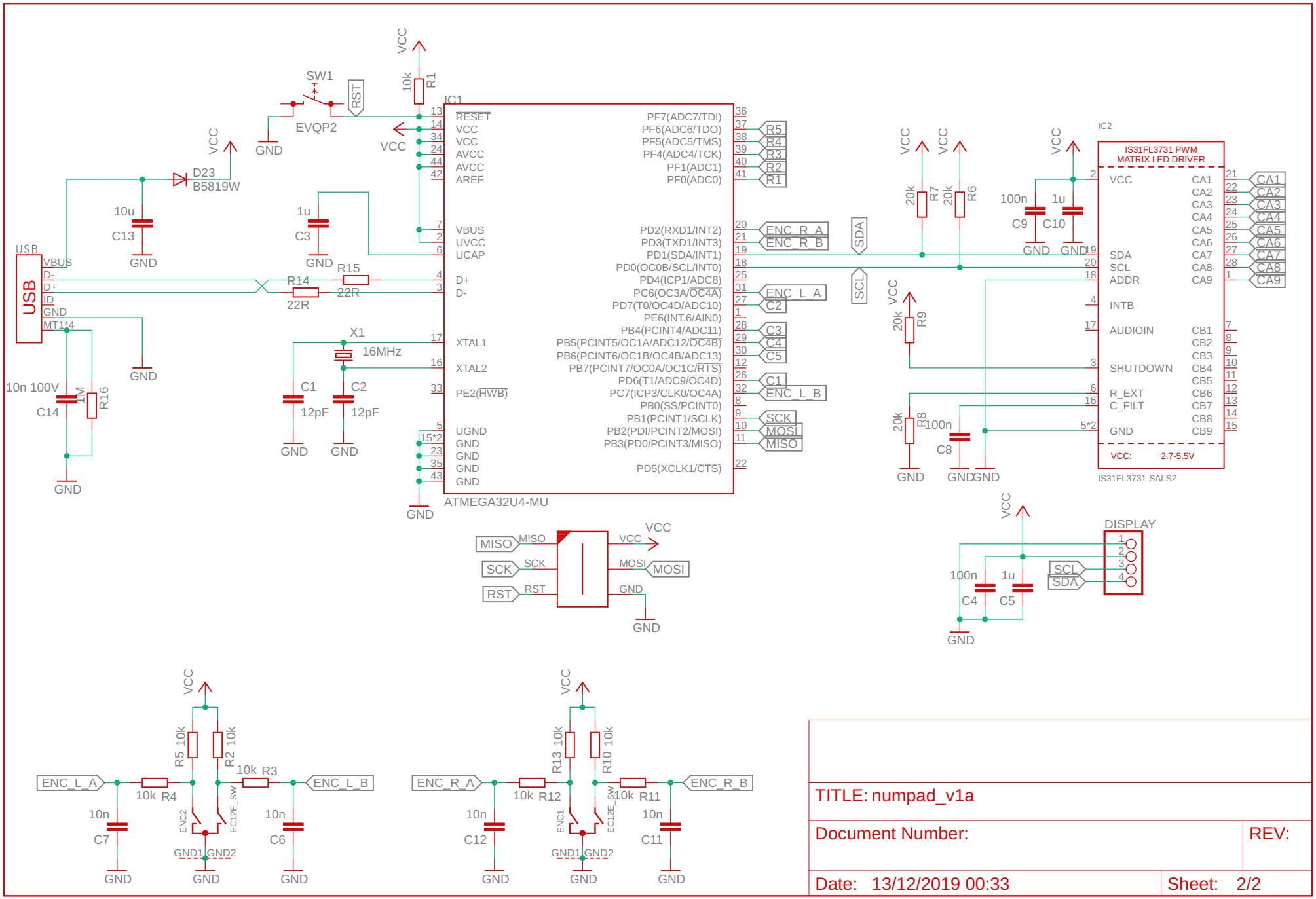

TITLE: numpad_v1a

Document Number:

REV:

Date: 13/12/2019 00:33

Sheet: 2/2