FRONT PANEL BUTTONS

This part is not strictly necessary, but it adds one of the best features of the mod:

* No need to access the ESP32's BOOT/EN buttons – they are controlled via the Xbox's front panel Power and Eject buttons.
* The original Xbox Power and Eject buttons still function as usual (e.g., eject DVD, power on/off Xbox).
* Possible to POWER_OFF Xbox using a wireless controller.

* **Possible to POWER_ON Xbox from a wireless controller.**
  !This will work only if the ESP32 remain powered all time! The Xbox's 3.3V standby rail (3V3_STBY) can provide only ~100mA, not enough for esp32. An additional small power supply inside the console is required.
* **TODO... ADD EXTERNAL PWR SUPPLY PICTURES**

Hardware variants:

Two hardware builds are shown below. Both are functional and may be supported in future releases, provided the required conditions are met.

Bottom-left design (N-MOSFETs)
Intended for GPIO pins configured as OUTPUT (push-pull).

Bottom-right design
Intended for GPIO pins configured as OUTPUT OPEN-DRAIN.

The bottom-right design is the correct and supported one for the current code in the main branch.
All future code updates will target this design.

Notes

The bottom-left hardware design may be used for internal builds where no separate power supply for the ESP32 is added.
However, switching between these two hardware designs requires a code update, specifically new GPIO pin configuration and definitions.

For now, compare the current code in system/manager.c with the version from release 25.04, and manually apply (swap) the relevant changes as needed.

GPIO pins are set as outputs push-pull
Release v25.04 is coded for this hardware.

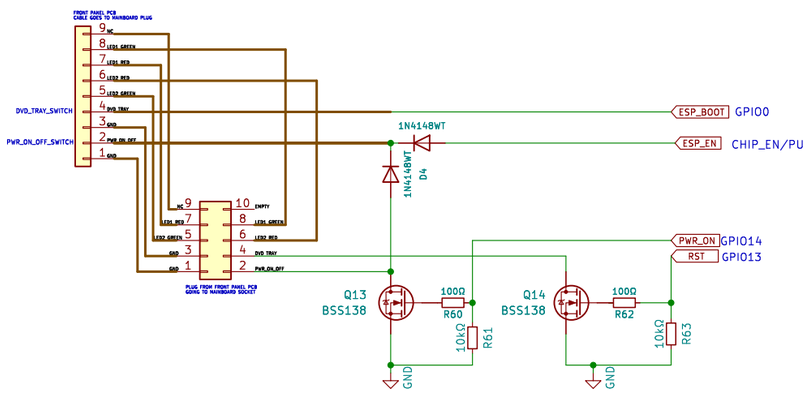

ESP32 is protected against "back powering"/damage from xbox 3.3V_STBY by mosfet's circuit.
Safe in every power configuration: with and without extra power supply for ESP32.

GPIO pins are configured as open-drain outputs.
Refer to the actual implementation in the main branch.

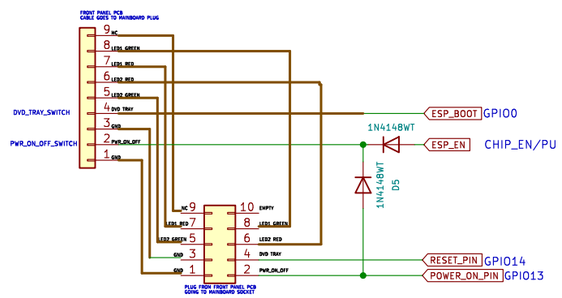

For use only with secondary PSU!!!

A simpler solution with fewer components.
The ESP must be powered at all the time.
Otherwise, the Xbox 3.3V_STBY will back-power the ESP32 through the GPIO13 and GPIO14 internal clamping diodes, leading to unpredictable behavior or hardware damage.

This project allow using BT gamepads on ogXBOX
BlueRetro by DarthCloud https://github.com/darthcloud/BlueRetro
OGX360 by Ryzee119 https://github.com/Ryzee119/ogx360
Based on concept and code by netham45 https://github.com/netham45/BlueRetro
BROGX by Konwektor https://github.com/konwektor/BlueRetro

Sheet: /HW2_FRONT_PANEL/
File: HW2_FRONT_PANEL.kicad_sch

Title: BROGX

Size: A3	Date: 2026-03-01	**Rev: 1.6**
KiCad E.D.A. 9.0.2		Id: 8/11