# Detailed Design Review: Digital CIM

Yunqi’s Children

Brayden Bolthouse, Minjae Koo, Aditya Patel, Harshit Nanda, Edison Sung

# System Specification Recap (old)

- Design and verify an all-digital CIM device for convolutional neural network MAC operations
- 2-bit weights and 4-bit activations
- Achieve:
  - Target clock frequency: 50 MHz
  - Lower power consumption than Von Neumann Architecture
  - 100% correct functional behavior

# System Specification Recap (new)

- Design and verify an all-digital CIM device for convolutional neural network MAC operations
- 1-bit weights and 4-bit activations
- Achieve:
  - Target clock frequency: 50 MHz (maybe higher)
  - Lower power consumption than Von Neumann Architecture
  - 100% correct functional behavior

# System Specification Recap - Changes

| Architecture Specs | Implemented | Reasons |
|---|---|---|
| 2-bit weights | 1-bit weight | • Hand layout complexity<br>• Adder tree complexity |
| Single-port SRAM (Memory Compiler) | Register (Synthesized register array) | • Area overhead<br>• Timing and latency complications w/ SRAM |

# OLD

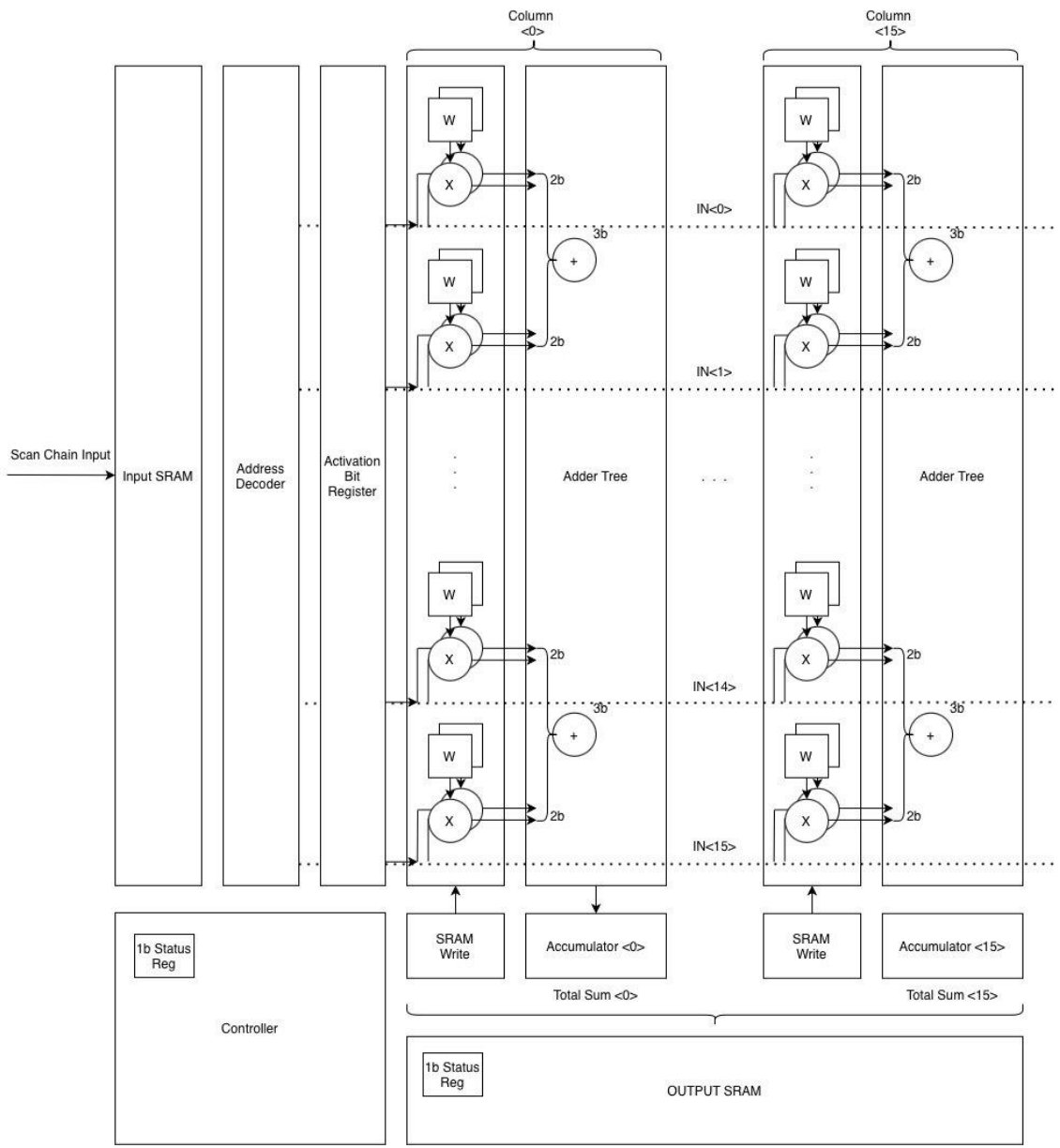
Column <0>
Column <15>
Scan Chain Input
Input SRAM
Address Decoder
Activation Bit Register
W
X
2b
3b
+
Adder Tree
IN<0>
IN<1>
IN<14>
IN<15>
SRAM Write
Accumulator <0>
Accumulator <15>
Total Sum <0>
Total Sum <15>
1b Status Reg
Controller
OUTPUT SRAM

# NEW

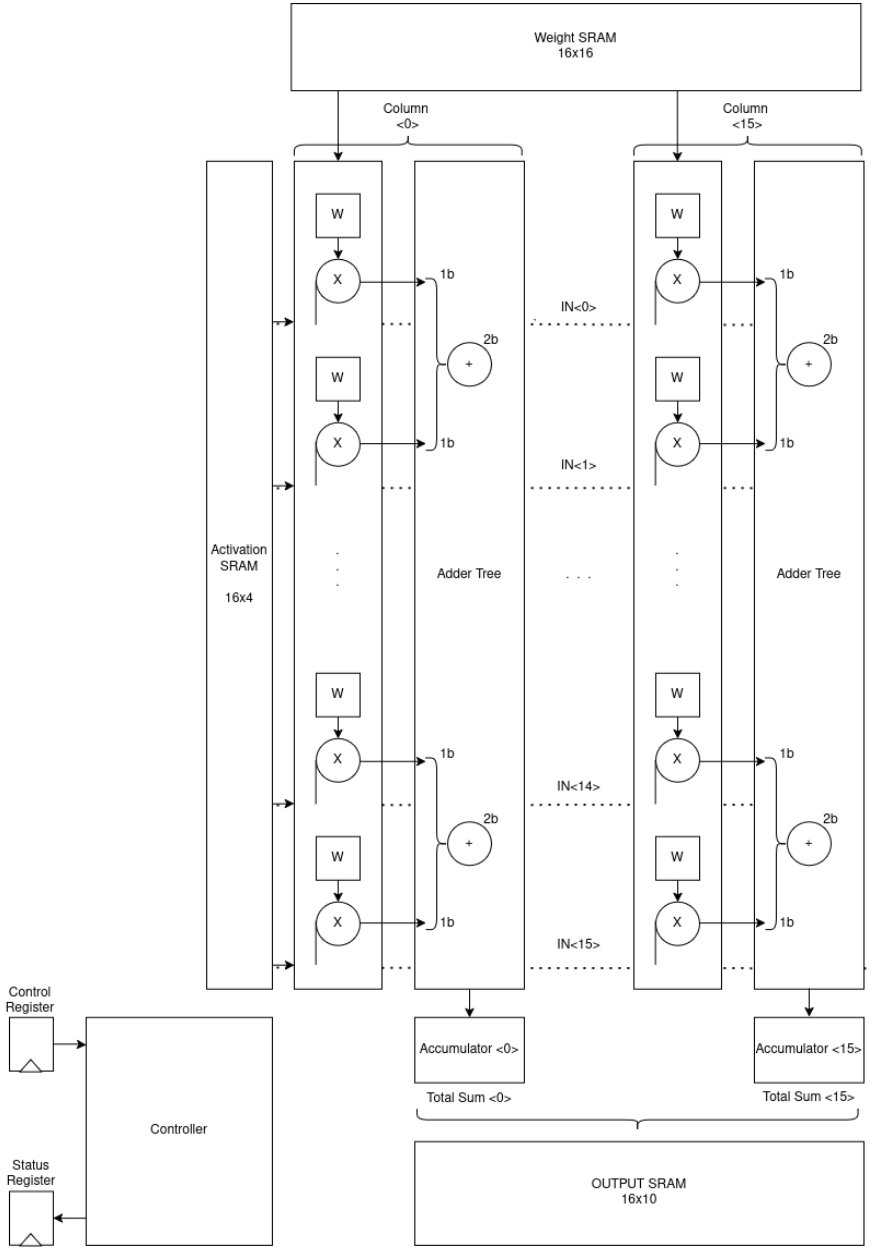
Weight SRAM 16x16
Column <0>
Column <15>
Activation SRAM 16x4
W
X
1b
2b
+
Adder Tree
IN<0>
IN<1>
IN<14>
IN<15>
Accumulator <0>
Accumulator <15>
Total Sum <0>
Total Sum <15>
Control Register
Status Register
Controller
OUTPUT SRAM 16x10

# Design Hierarchy & Block Overview

- 4 main blocks
  - SRAM + NOR
  - Adder Tree
  - Accumulator
  - Controller

# Design Hierarchy & Block Overview

- 4 main blocks
  - **SRAM + NOR**
    - **6T SRAM + CMOS NOR**
  - Adder Tree
  - Accumulator
  - Controller

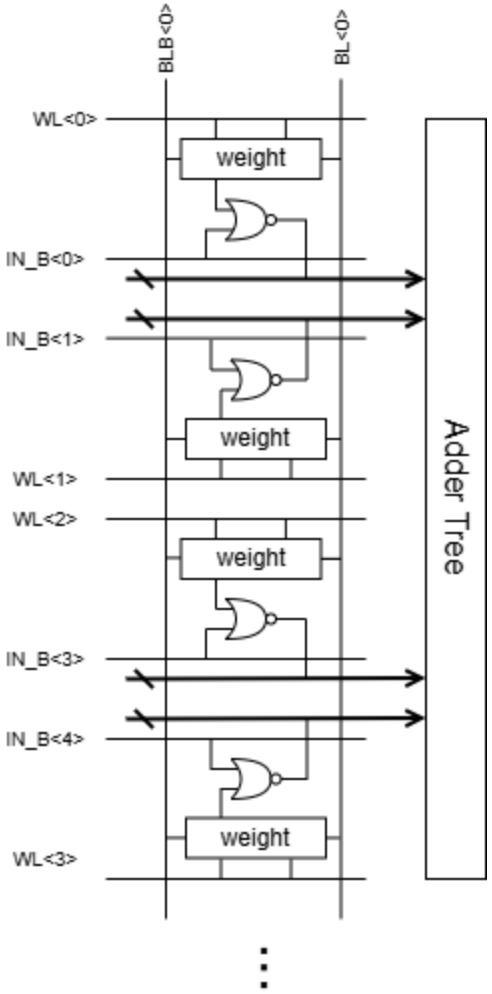

# Design Hierarchy & Block Overview

- 4 main blocks
  - SRAM + NOR
  - **Adder Tree**
    - **HA + FA (PTL)**
  - Accumulator
  - Controller

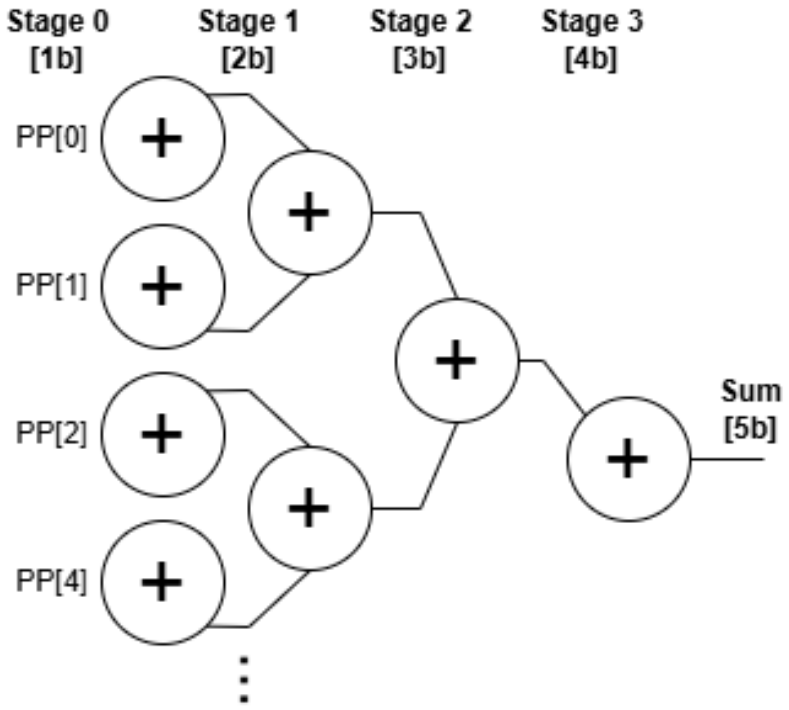

# Full Adder Tree

| Adder | # Transistors (no buffer) | # Transistors (w/ buffer) |
|---|---|---|
| Half Adder | 4T | 4T + 8T = **12T** |
| Full Adder | 16T | 16T + 12T = **28T** |

| Component | # Transistors |
|---|---|
| Half Adder | 12T x 15 = 180T |
| Full Adder | 28T x 11 = 308T |
| Output Buffer | 20T |
| **Total** | **508T** |

# Full Adder Tree

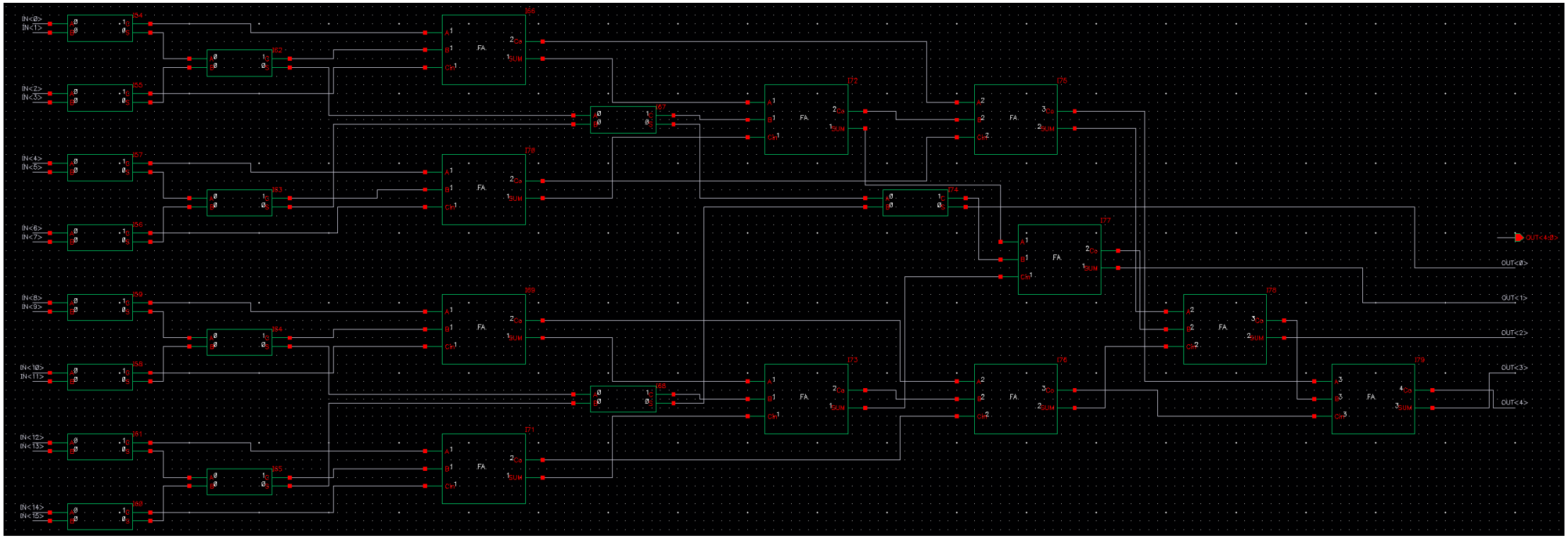

# Design Hierarchy & Block Overview

- 4 main blocks
  - SRAM + NOR
  - Adder Tree
  - **Accumulator**
    - **RTL**
  - Controller

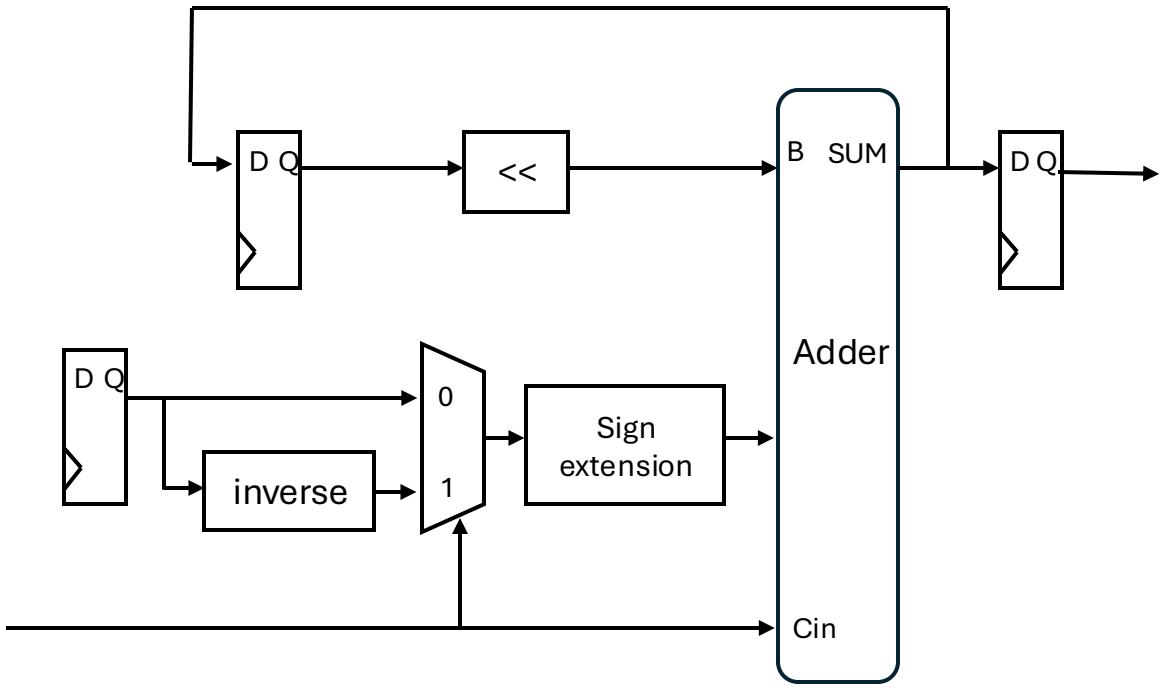

# Design Hierarchy & Block Overview

- 4 main blocks
  - SRAM + NOR
  - Adder Tree
  - Accumulator
  - **Controller**
    - **RTL**
    - **FSM**

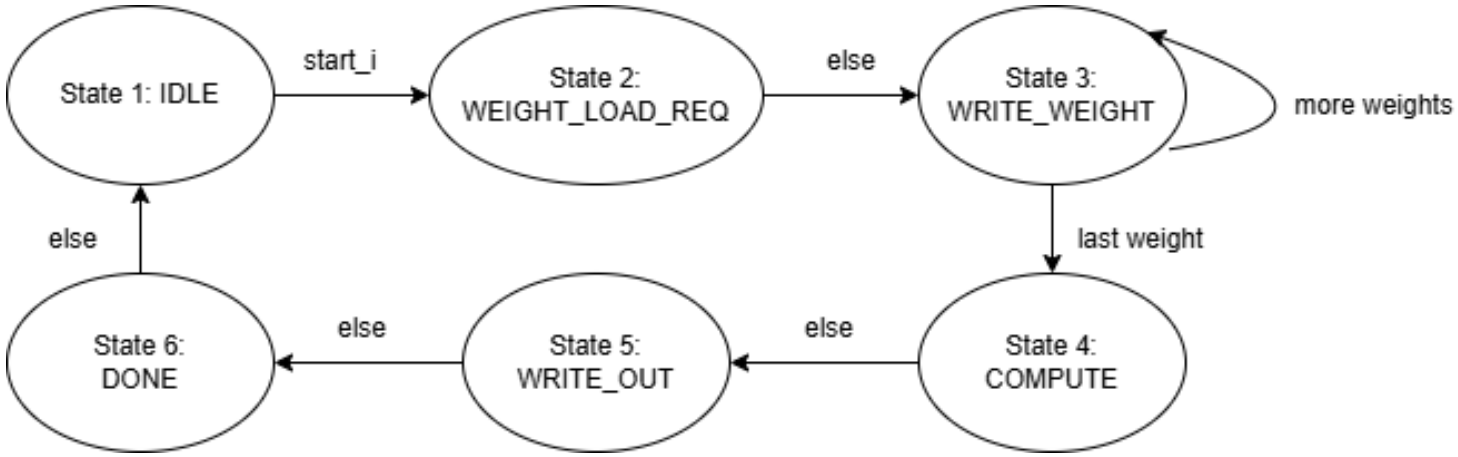

# SRAM + Adder Tree Column

- Completed
  - DRC/LVS clean
  - HSPICE verification
- Todo
  - Post-PEX timing

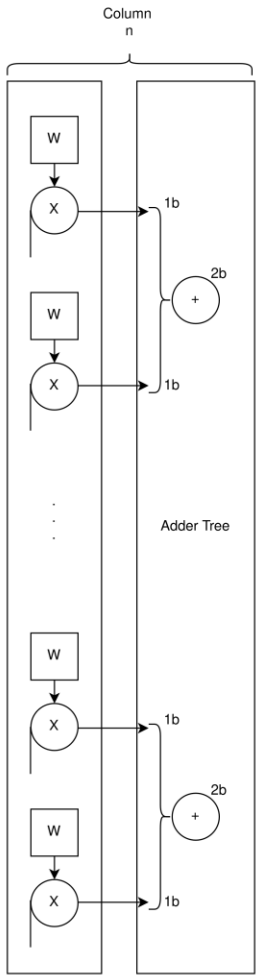


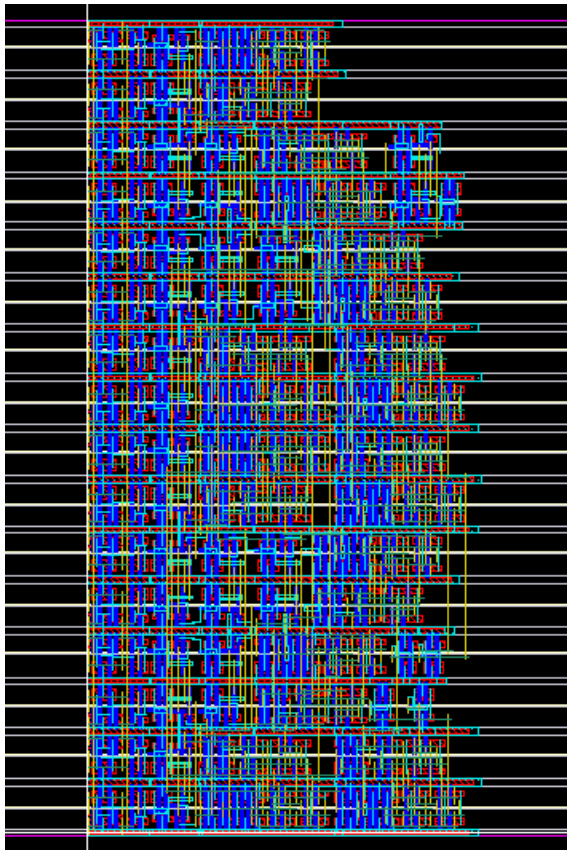

# SRAM + Adder Tree 16x16

- Approximate Area (custom layout, cell area): 217.6 x 28.8 = **6,266.88 um^2 (0.006267 mm^2)**
- Todo
  - Schematic
  - HSPICE verification
  - Layout
  - DRC/LVS
  - Post-PEX timing

# Block-Level Interfaces

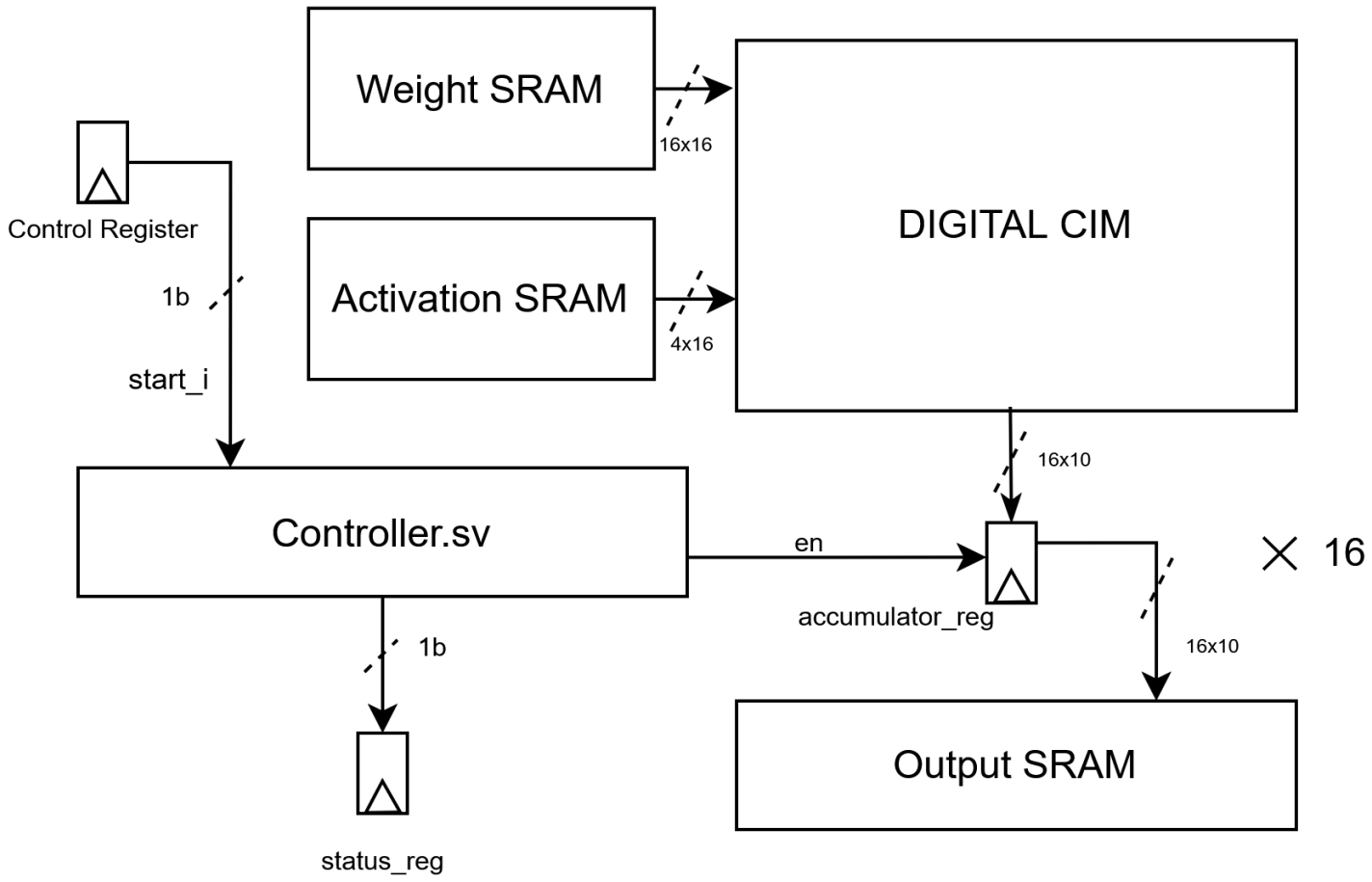

# RTL/Gate-Level Implementation Status

| Block | Function | RTL Status | Verification Status | Gate-Level Status | Owner |
|---|---|---|---|---|---|
| controller.sv | FSM + address/control sequencing | Completed | Block TB passing | Included in synth netlist | Harshit |
| accumulator.sv | Per-column shift-add accumulation | Completed | Block TB passing | Included in synth netlist | Harshit |
| digital_cim | Integrates controller + 16 accumulators | Completed | Top-level RTL TB passing | Synthesized + GLS pass | Harshit |
| digital_cim_sram | Adds 3 SRAMs around digital_cim | Completed | In progress | Synthesized successfully | Harshit |

# RTL/Gate-Level Implementation Status

```sv
typedef enum logic [2:0] {
    IDLE,
    WEIGHT_LOAD_REQ,
    WRITE_WEIGHT,
    COMPUTE,
    WRITE_OUT,
    DONE
} state_t;
state_t state, next_state;
```

States within controller.sv

```sv
case (state)
    // waiting for control-register start pulse
    IDLE: begin
        if (start_i) begin
            next_state = WEIGHT_LOAD_REQ;
            read_addr_clear = 1'b1;
            act_addr_clear = 1'b1;
            out_addr_clear = 1'b1;
        end
    end

    WEIGHT_LOAD_REQ: begin
        w_addr = '0;
        w_rd_en = 1'b1;
        read_addr_clear = 1'b1;
        next_state = WRITE_WEIGHT;
    end

    WRITE_WEIGHT: begin
        cim_addr = read_addr;
        data_out = w_din;
        w_en = 1'b1;
        if (read_addr < (`DEPTH - 1)) begin
            w_rd_en = 1'b1;
            w_addr = read_addr + 1'b1;
            read_addr_en = 1'b1;
        end else begin
            // on the last cycle of writing weights into the CIM
            next_state = COMPUTE;
            acc_start = 1'b1;
            act_addr = '0;
            act_rd_en = 1'b1;
            act_addr_clear = 1'b1;
        end
    end
```

Control logic for states within controller.sv

```sv
module accumulator #(
    parameter PSUM_WIDTH   = 5, // width of partial sum fr
    parameter ACC_WIDTH    = 10
)(
    input  logic clk,
    input  logic rst_n,
    input  logic start,
    input  logic en,
    input  logic [PSUM_WIDTH-1:0] partial_sum_total, // ps

    output logic [ACC_WIDTH-1:0] mac_out     // output acc
);

    logic [ACC_WIDTH-1:0]  acc_reg;

    always_ff @(posedge clk or negedge rst_n) begin
        if (!rst_n) begin
            acc_reg <= '0;
        end
        else if (start) begin
            acc_reg <= '0;
        end
        else if (en) begin
            acc_reg <= (acc_reg << 1) + partial_sum_total;
        end
    end

    assign mac_out = acc_reg;
endmodule
```

Accumulator.sv

# Preliminary Timing Analysis

| | |
|---|---|
| clk | 20ns (50MHz) |
| clk uncertainty / clk transition | 0.2ns |
| worst setup slack (WNS) | +18.71ns |
| Max Delay/Min Delay | 1.09 ns / 0.25 ns |
| critical path | path from a controller register to an accumulator register |

# Verification Plan & Coverage

- Testbench overview (top-level and block-level)

tb_acc + tb_controller + tb_digital_cim (top-level)

- Verification methodology

Block-level -> top-level RTL -> post-synthesis (GLS) + goldenbrick checking python file

| Testbench | Status | Line Cov |
|---|---|---|
| tb_accumulator | PASS | 90.91% |
| tb_controller | PASS | 88.70% |
| tb_digital_cim | PASS | 94.16% |

# Power & Area Estimates

- Total power = 0.505 mW (synthesis estimate for RTL code only)
- Approximate Area (custom layout, cell area):
  217.6 x 28.8 = **6,266.88 um^2 (0.006267 mm^2)**
- Area (synthesis, whole cell area): **12,655.44 um^2 (0.01266 mm^2)**
  - controller + 16 accumulators = 3747.240065 um^2
  - Output sram (16x10) = 2891.160074 um^2
  - Act sram (4x16)= 1274.4 um^2
  - Weight sram (16x16)  = 4514 um^2
- Total approximate area = **18,922.32 um^2 (0.01892 mm^2)**

# IP Status

- Scan chain:
  - Three SRAMs to read and write the data from
    - Has handshake signal to indicate done_status
  - Control register to start the CIM
  - Readback signals:
    - Control_Reg readback signal to read the status of control reg
  - Status_Done register to know when the CIM is done
  - Status_Done acts as handshake signal
    - Lets the scan chain know that the CIM is done and is ready to take in new input

# Issues, Risks, & Next Steps

## - Issues and risks

- Risk of timing degradation after post-layout extraction (PEX) of adder tree
- DRC/LVS violations after full layout integration that may require layout fixes
- Routing between APR and hand-layout blocks (hopefully we can use tools)

## - Physical design readiness

- RTL done, verified, synthesized, timing ok → ready for layout
- SRAM + Adder Tree Column DRC/LVS clean
- TODO: Clean up adder tree, replicate to make 16 adder tree columns, combine APR with custom layout

## - Upcoming milestones and timeline

Week 11: Physical design review (First APR complete, all tests passing)

Week 13: Tapeout review (DRC/LVS clean)

Thank you for listening!