Architecture Design Review: Digital CIM

Yunqi’s Children

Brayden Bolthouse, Minjae Koo, Harshit Nanda, Aditya Patel, Edison Sung

System Specification

- Design and verify an all-digital CIM device for convolutional neural network MAC operations
- 2-bit weights and 4-bit activations
- Achieve:
  - Target clock frequency: 50 MHz
  - Lower power consumption than Von Neumann Architecture
  - 100% correct functional behavior
- I/O Needs: Clock, Scan_in, Scan_out, Chip_Enable, Reset

System Specification

- Energy Per MAC: 0.00425 pJ/MAC
- MAC area estimation: 21.05 μm^2
- Estimations based on a 65 nm paper found published in KAIST

Functional Block Diagram

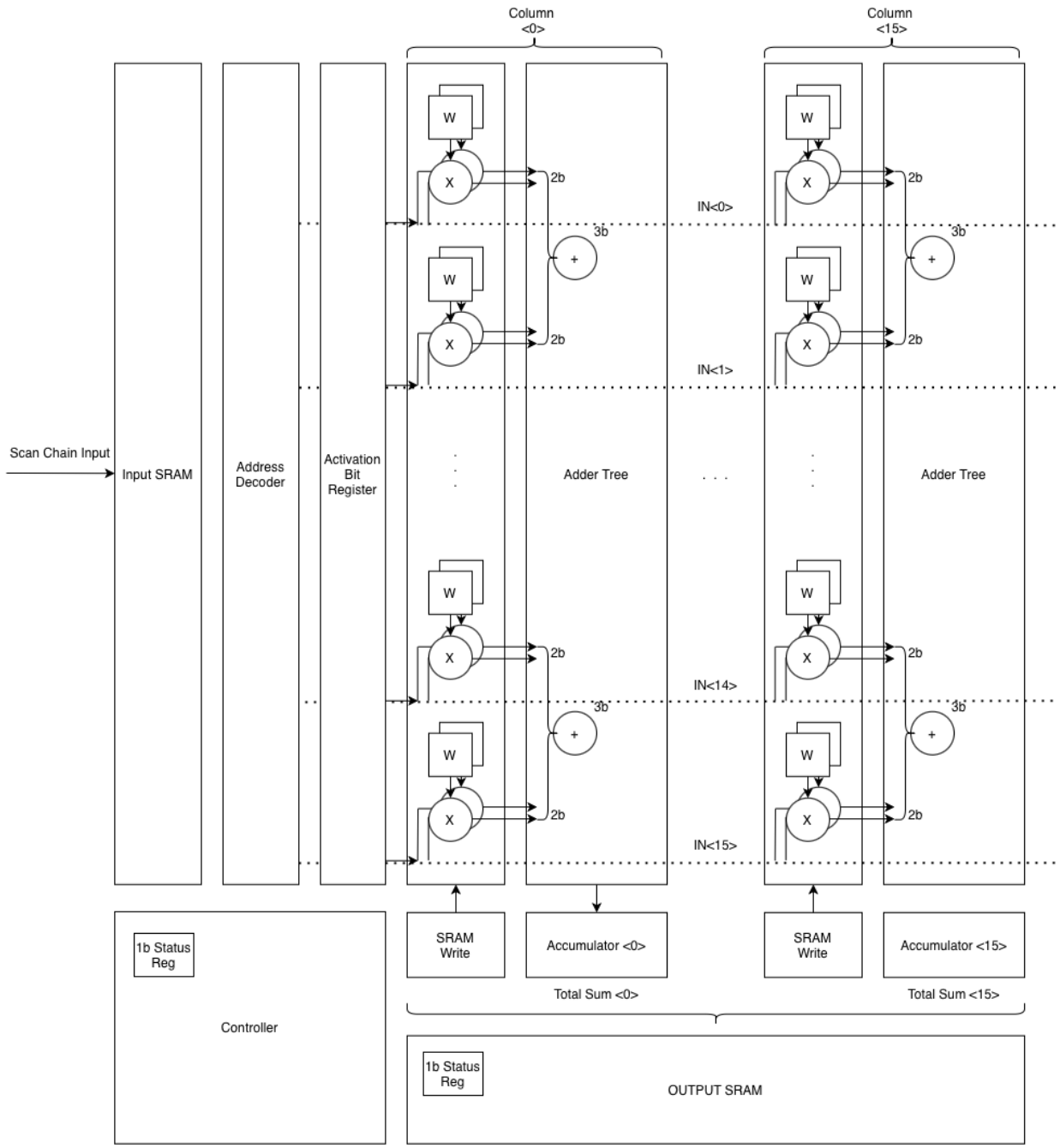

CIM Array (One column)

- Bitwise multiplication with nor
  - Partial products
- Each column's partial products are summed by a digital adder tree.
- An accumulator combines results across activation bits to form the final MAC output.

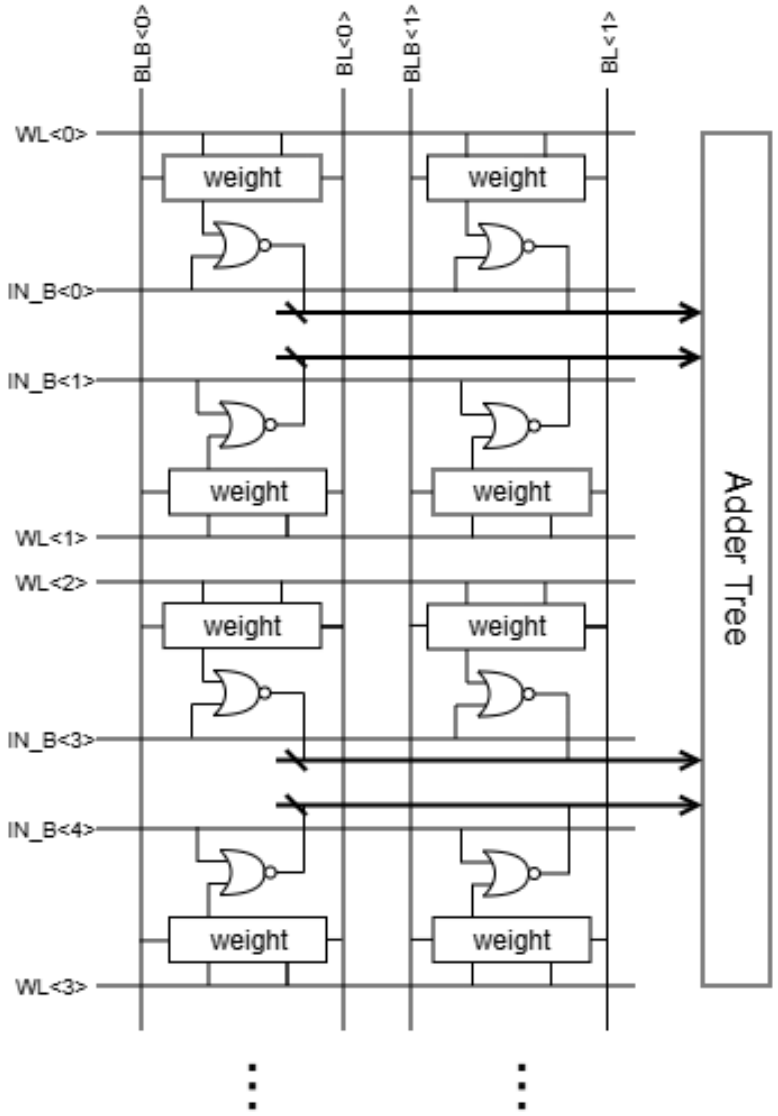

Adder Tree

- Each row produces a 2-bit partial product
- Adder for stage 0→1 is HA + FA
- Each stage after that is an additional FA

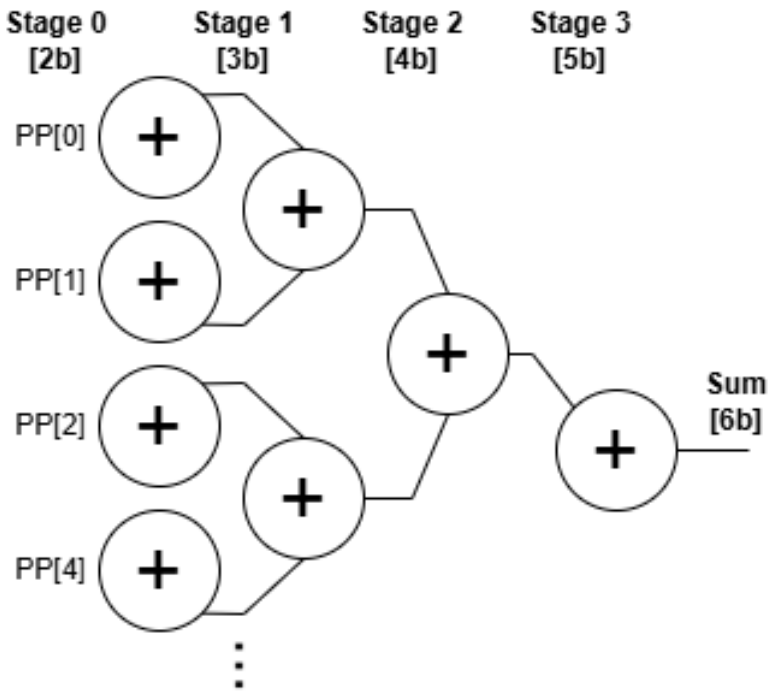

Accumulator

- Accumulator shifts and adds each cycle to combine bit-serial partial sums
- Sign extension and optional inversion support signed MACs
- Registers pipeline the feedback path

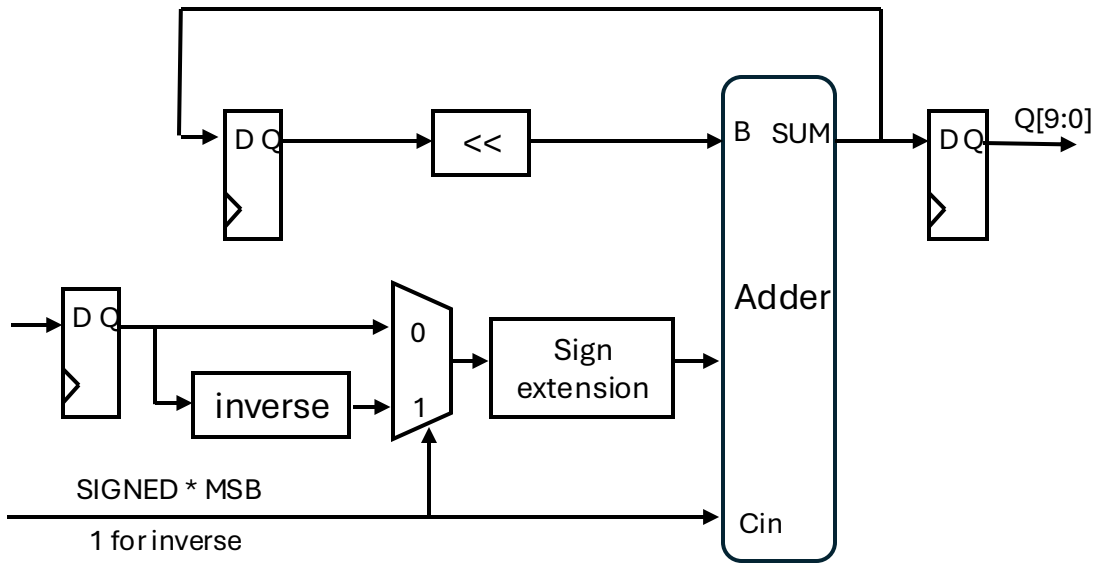

Control Path Architecture

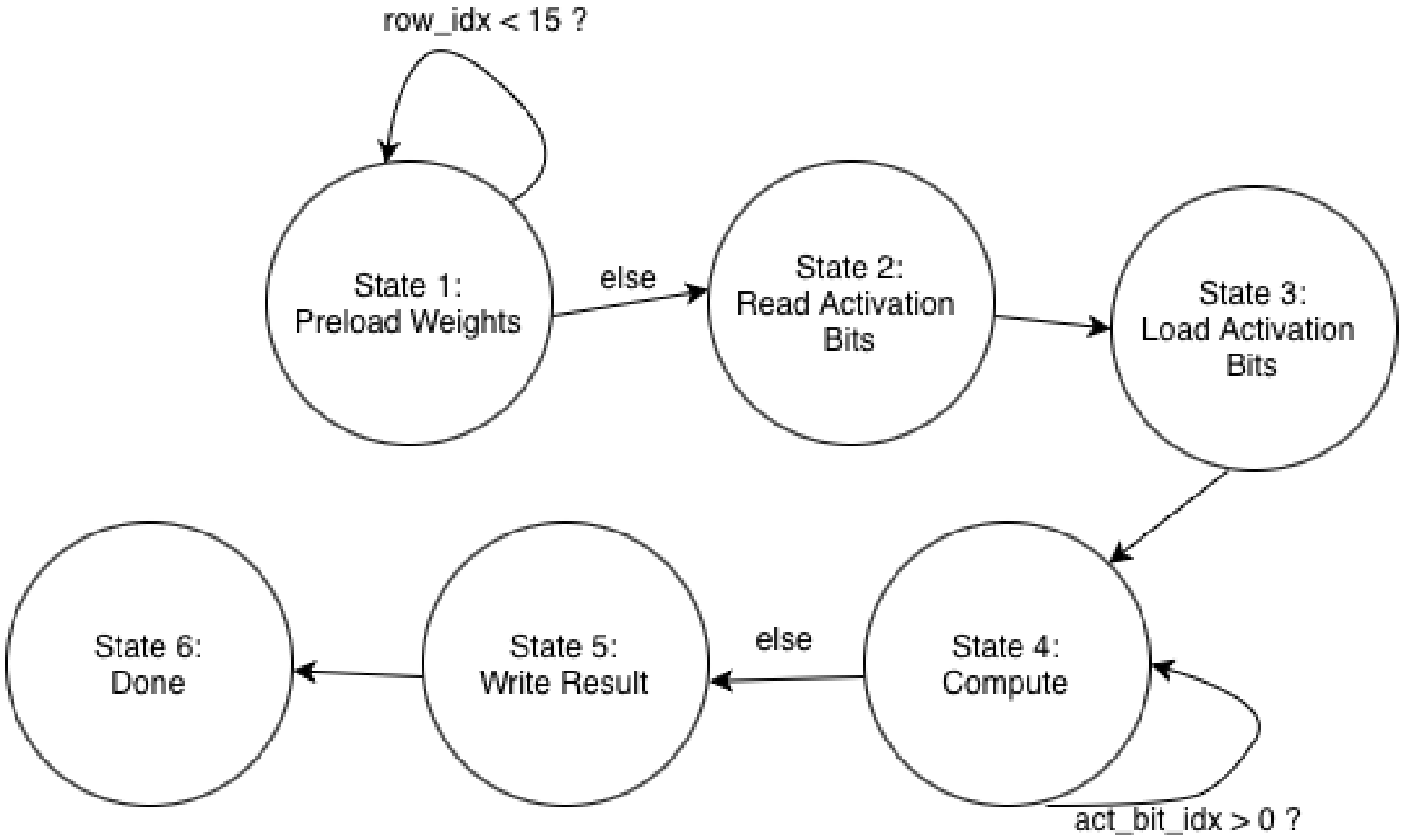

Memory & Storage Architecture

- Weights are stored Stationary inside the array
  - Mapped to 2 physical columns (LSB column, MSB column)
- Output Registers (D-Flip-Flops)
  - Located at the bottom of each column holding the partial sums and the final output for that column
- Input SRAM that hold the activations bits and the weight bits
- Output SRAM that holds the partial sums for each column

I/O & Peripheral Interface

- Input Ports: Scan_In, load_chip, Reset, Clock, Clock_bar,
- Outputs: Scan_Out
- Scan_In loads the desired weights to the Input SRAM
- Weights are then loaded into the CIM during the SRAM mode
- After loading the weights in computational SRAM, we recycle the same Input SRAM for loading the activation bits
- The controller controls the loading of both weights and activation bits
- After the computation, the computed outputs are stored in an output sram at the bottom

Architectural Trade-offs

- Type of adder selected
  - 28T adder is robust but consumes more area
  - No carry in is needed for first stage thus half adder is used
  - Hybrid 18T PTL adder (Yin et al. paper)

Next Steps

- Start Schematic/Layout
  - Input + output SRAM (initial individual cell design)
  - 2 bit weight SRAM + 1 bit multiplication + adder tree custom cell design
  - Accumulator + controller using RTL