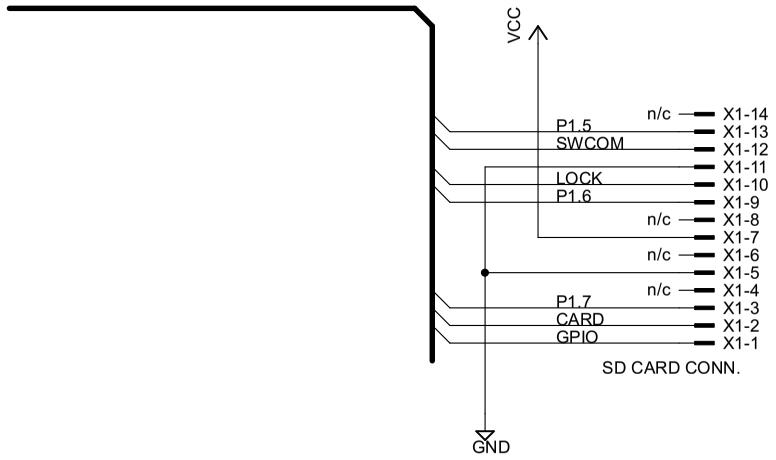

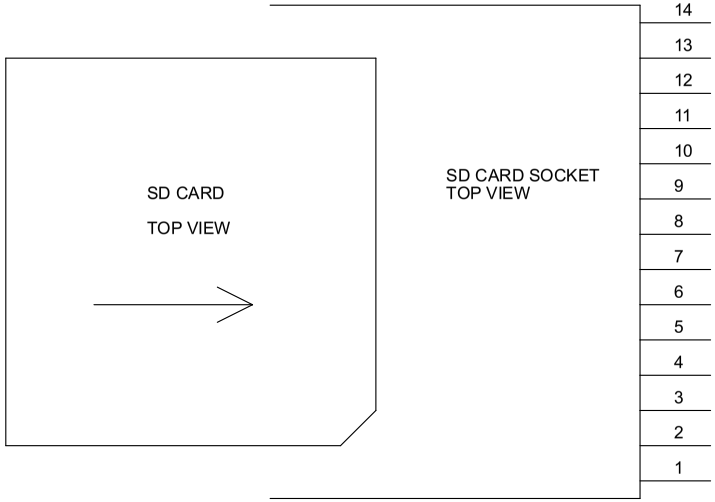

	SD CARD PIN	SPI CONNECTION
14	8 - DAT1	
13	7 - DO / DAT0	MISO (P1.5)
12	SWITCH COMMON	
11	6 - GND	GND
10	LOCK SWITCH	
9	5 - CLK	SCLK (P1.6)
8	n/c	
7	4 - Vcc (+3.3V)	Vcc (+3.3V)
6	n/c	
5	3 - GND	GND
4	9 - DAT2	
3	2 - DI / CMD	MOSI (P1.7)
2	CARD SWITCH	
1	1 - nCS / DAT3	nCS (GPIO)

TITLE: SD_Card_Socket

Document Number: REV:

Date: 2/27/2013 11:43:56 AM Sheet: 1/1