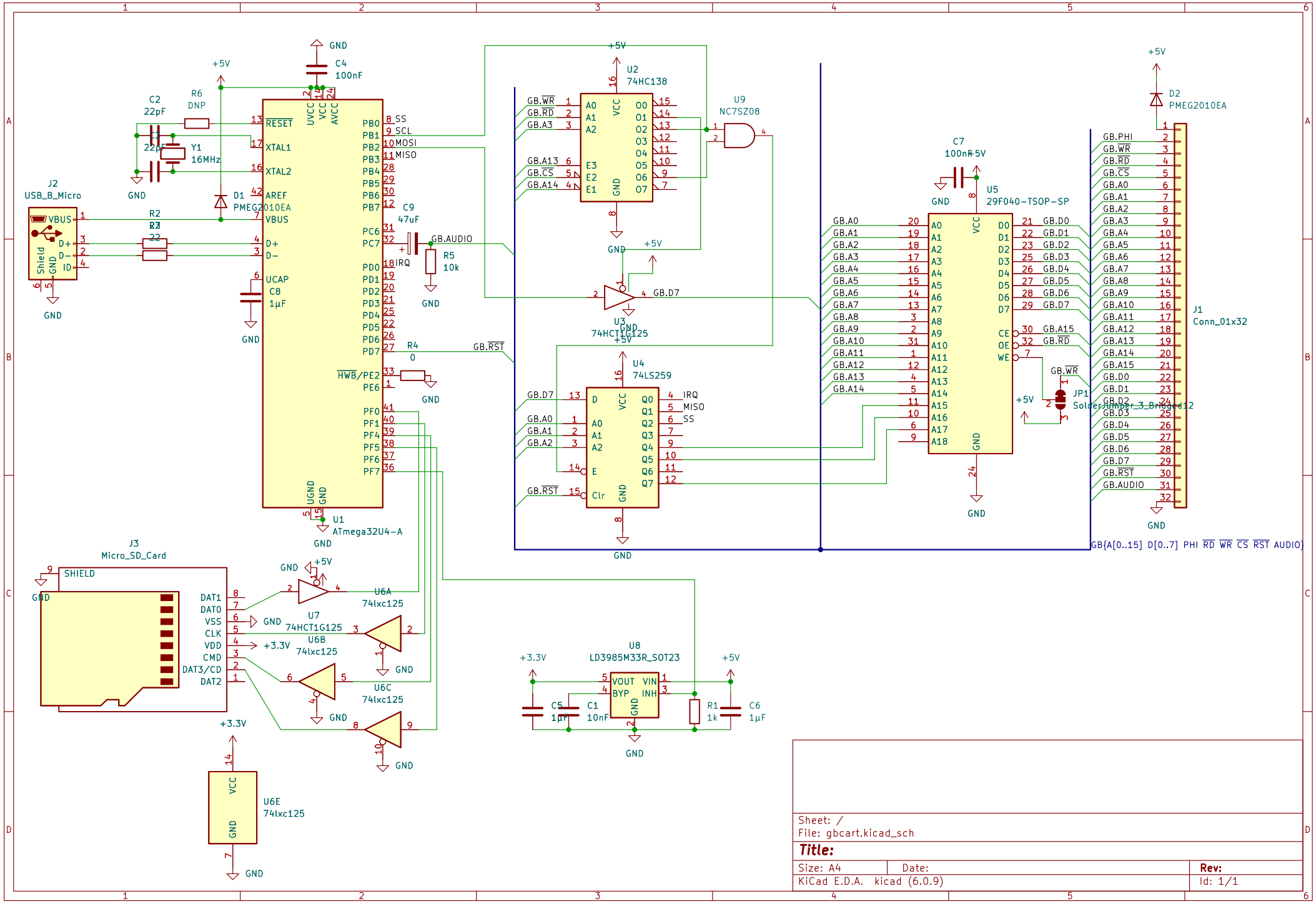
U1
ATmega32U4-A
U2
74HC138
U3
74HCT1G125
U4
74LS259
U5
29F040-TSOP-SP
U6A
74lxc125
U6B
74lxc125
U6C
74lxc125
U6E
74lxc125
U7
74HCT1G125
U8
LD3985M33R_SOT23
U9
NC7SZ08
J1
Conn_01x32
J2
USB_B_Micro
J3
Micro_SD_Card
Y1
16MHz
D1
PMEG2010EA
D2
PMEG2010EA
JP1
SolderJumper_3_Bridged12
GB{A[0..15] D[0..7] PHI RD WR CS RST AUDIO}
Sheet: /
File: gbcart.kicad_sch
Title:
Size: A4
Date:
Rev:
KiCad E.D.A. kicad (6.0.9)
Id: 1/1