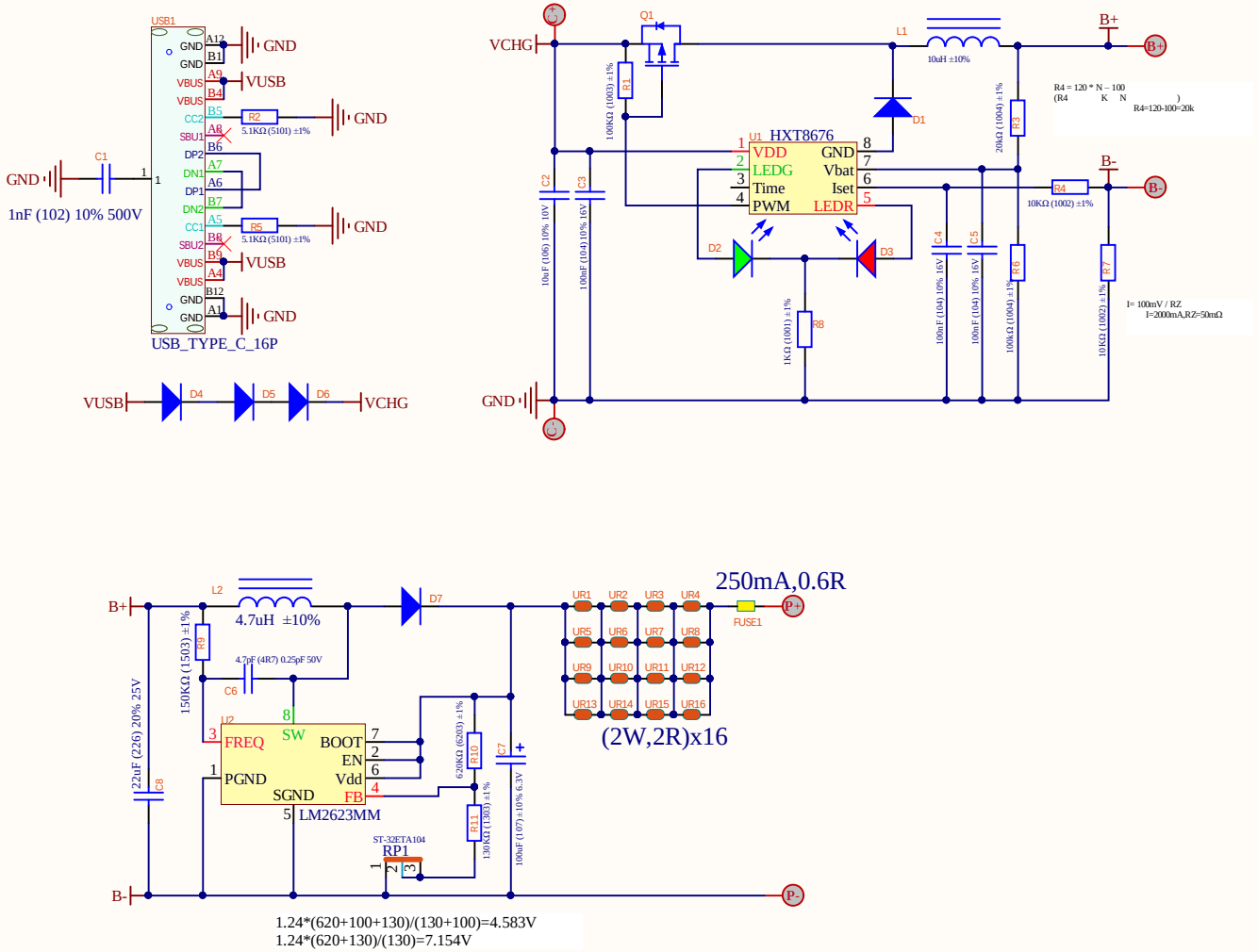

Title		
Size A4	Number	Revision
Date: 2019/7/5		Sheet of
File: E:\ 433 \..\NiHAD\Draw6.SchDoc		Drawn by:

2Rx16

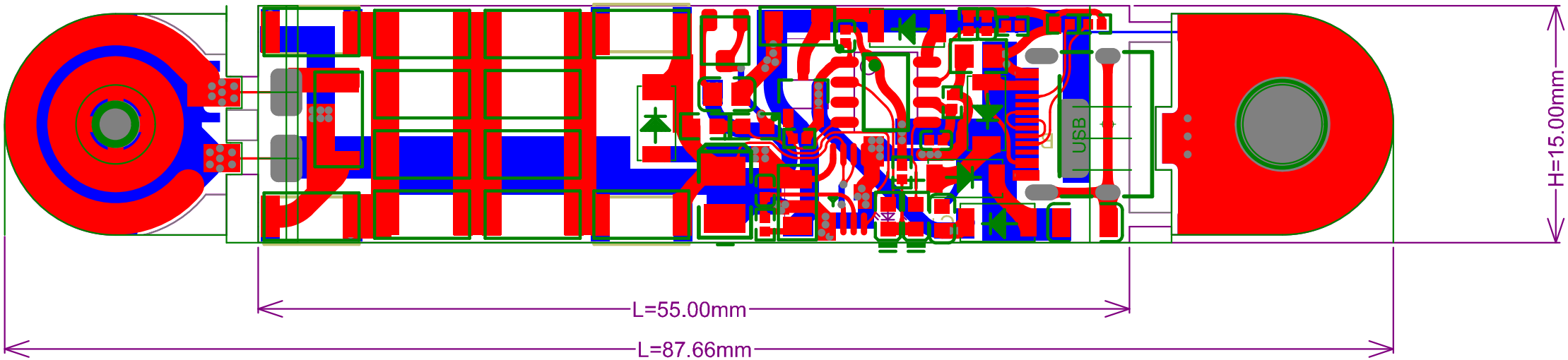
USB
H=15.00mm
L=55.00mm
L=87.66mm