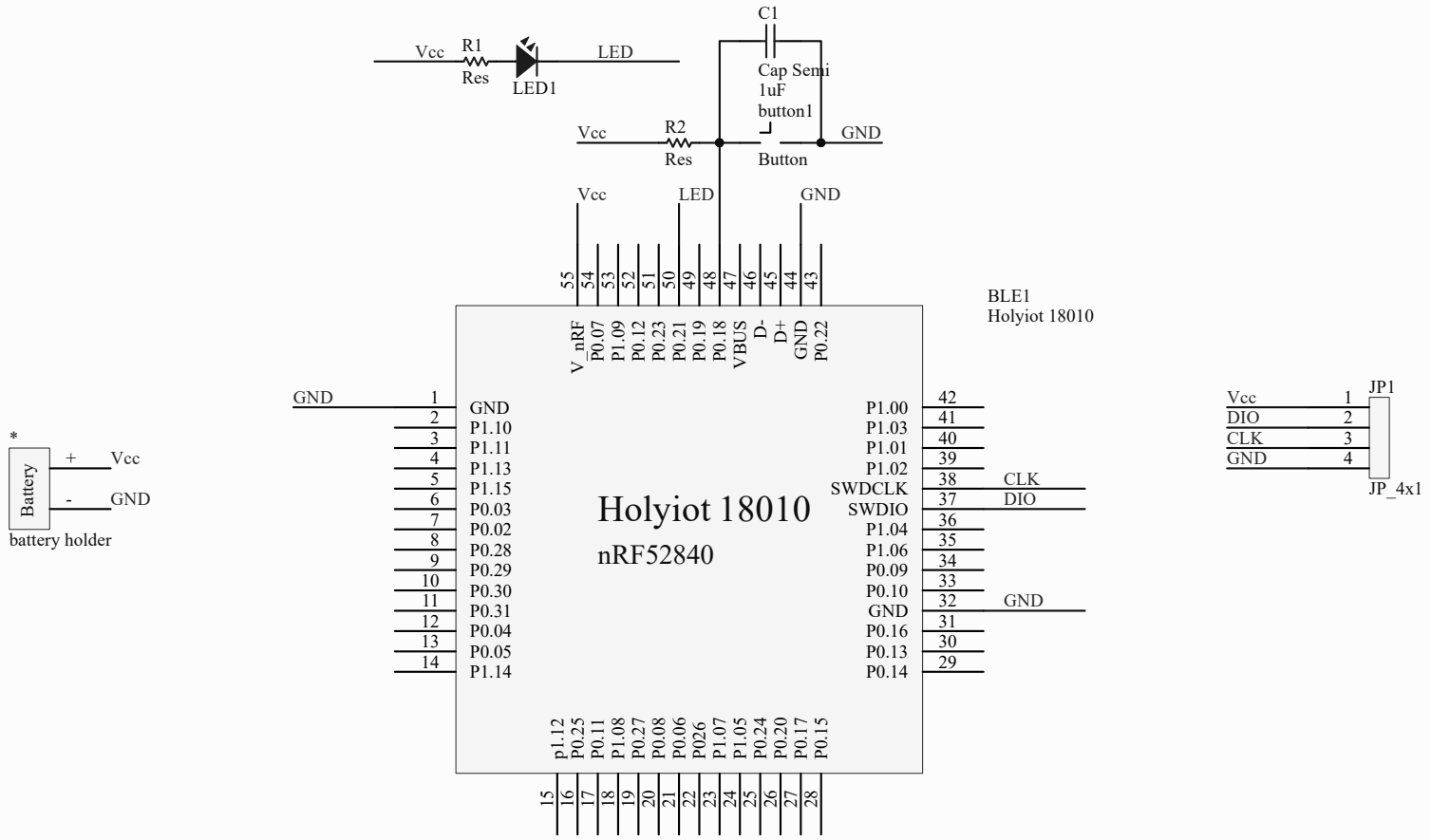

Title		
Size A	Number	Revision
Date: 13/11/2018	Sheet of	
File: D:\Altium Project\Test BLE\BLE.SchDoc	Drawn By:	