© COPYRIGHT 2012 AEROSPACE INDUSTRIES ASSOCIATION OF AMERICA, INC. ALL RIGHTS RESERVED

FED. SUPPLY CLASS
5306

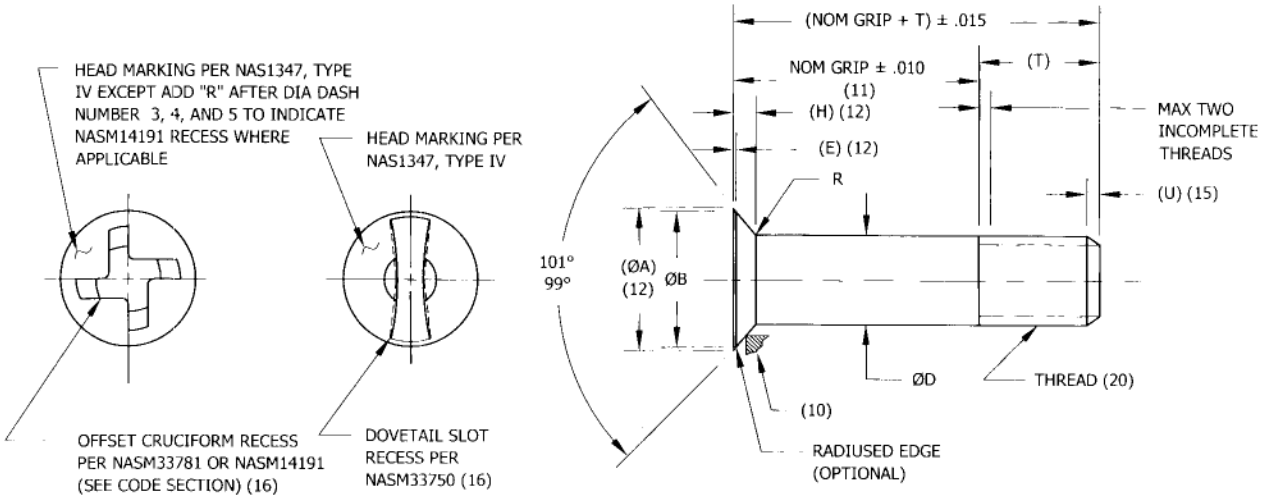


FIGURE 1 – DIMENSIONS

TABLE I – DIMENSIONS

| DIA DASH NO. | THREAD UNJF-3A (20) | ØA REF (12) | ØB MIN | ØD | | E REF (12) | H REF (12) | R RAD | T REF | U REF (15) | Y TOL (13) | Z TOL (14) | TENSILE STRENGTH LBS. MIN | |
|---|---|---|---|---|---|---|---|---|---|---|---|---|---|---|
| | | | | PLATED | UNPLATED | | | | | | | | MAT CODE C (9) (17) | MAT CODE F,K (18) |
| 3 | .1900-32 | .3047 | .2578 | .1895<br>.1885 | .1895<br>.1890 | .015 | .049 | .020<br>.010 | .363 | .050 | .005 | .0040 | 2,000 | 1,600 |
| 4 | .2500-28 | .3988 | .3504 | .2495<br>.2485 | .2495<br>.2490 | .015 | .063 | .020<br>.010 | .403 | .050 | .006 | .0030 | 3,700 | 3,200 |
| 5 | .3125-24 | .4787 | .4289 | .3120<br>.3110 | .3120<br>.3115 | .015 | .070 | .025<br>.010 | .501 | .060 | .007 | .0030 | 5,000 | 4,230 |
| 6 | .3750-24 | .5662 | .5149 | .3745<br>.3735 | .3745<br>.3740 | .015 | .081 | .030<br>.015 | .594 | .060 | .008 | .0025 | 7,200 | 6,160 |
| ~~7 (19)~~<br>7B | .4375-20 | .6741 | .6047 | .4370<br>.4360 | .4370<br>.4365 | .022 | .100 | .030<br>.015 | .675 | .080 | .009 | .0025 | ~~10,000~~<br>9,000 | 8,320 |
| 8 | .5000-20 | .7611 | .6901 | .4995<br>.4985 | .4995<br>.4990 | .022 | .111 | .030<br>.015 | .768 | .080 | .010 | .0020 | 13,500 | 11,300 |
| 9 | .5625-18 | .8449 | .7655 | .5615<br>.5605 | .5615<br>.5610 | .025 | .119 | .030<br>.015 | .881 | .090 | .010 | .0020 | 17,000 | 14,300 |
| 10 | .6250-18 | .9329 | .8518 | .6240<br>.6230 | .6240<br>.6235 | .025 | .130 | .030<br>.015 | .981 | .090 | .010 | .0020 | 21,000 | 18,000 |

Reproduced By IHS
With The Permission Of AIA/NAS
Under Royalty Agreement

| THIRD ANGLE PROJECTION | CUSTODIAN | REVISION |
|---|---|---|
| | NATIONAL AEROSPACE STANDARDS COMMITTEE | 12 |
| PROCUREMENT SPECIFICATION | TITLE | CLASSIFICATION PART STANDARD |
| NOTED | **BOLT, SHEAR, 100° FLUSH REDUCED HEAD, OFFSET CRUCIFORM, OFFSET CRUCIFORM – RIBBED AND DOVETAIL SLOT, 95 KSI FSU** | **NAS1581**<br>SHEET 1 OF 7 |

USE OF OR RELIANCE UPON THIS DOCUMENT OR ANY NATIONAL AEROSPACE STANDARD IS ENTIRELY VOLUNTARY. AIA DOES NOT QUALIFY SUPPLIERS OR CERTIFY CONFORMANCE OF ITEMS PRODUCED UNDER NATIONAL AEROSPACE STANDARDS. AIA MAKES NO REPRESENTATION OR CLAIM RESPECTING (1) THE SUITABILITY OF ITEMS FOR ANY PARTICULAR APPLICATION OR (2) THE EXISTENCE OF OR APPLICABILITY THERETO OF PATENT OR TRADEMARKS RIGHTS.

AEROSPACE INDUSTRIES ASSOCIATION OF AMERICA, INC
1000 WILSON BLVD.
ARLINGTON, VA 22209

THIS DRAWING SUPERSEDES ALL ANTECEDENT STANDARD DRAWINGS FOR THE SAME PRODUCT AND SHALL BECOME EFFECTIVE NO LATER THAN SIX MONTHS FROM THE LAST REVISION DATE.

FORM 09-01

REVISION DATE: JUNE 29, 2012

ISSUE DATE: FEBRUARY 1963

© COPYRIGHT 2012 AEROSPACE INDUSTRIES ASSOCIATION OF AMERICA, INC. ALL RIGHTS RESERVED

AEROSPACE INDUSTRIES ASSOCIATION OF AMERICA, INC
1000 WILSON BLVD.
ARLINGTON, VA 22209

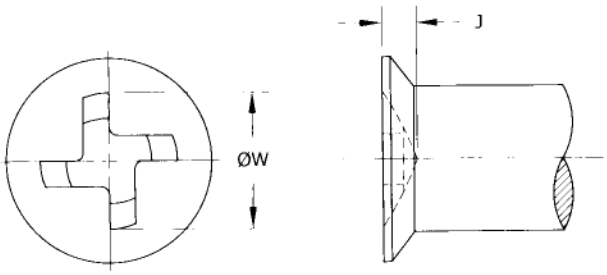


FIGURE 2 – OFFSET CRUCIFORM RECESS

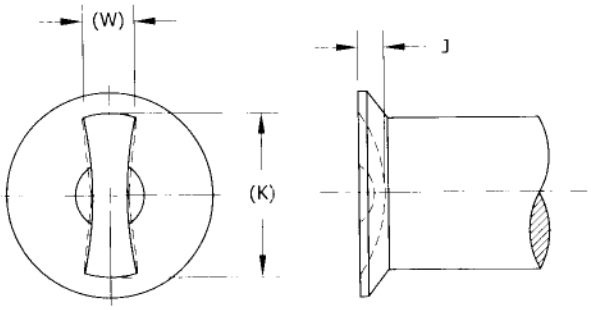


FIGURE 3 – DOVETAIL SLOT RECESS

TABLE II – OFFSET CRUCIFORM RECESS DIMENSIONS

| DIA DASH NO. | RECESS SIZE | J MAX | ØW MAX | GAGE PENETRATION | | RECESS TORQUE IN LBS. MIN |
|---|---|---|---|---|---|---|
| | | | | MIN | MAX | |
| 3 | 8 | .078 | .215 | .0480 | .0595 | 37 |
| 4 | 10 | .090 | .248 | .0560 | .0685 | 50 |
| 5 | 1/4 | .118 | .325 | .0750 | .0890 | 125 |
| 6 | 5/16 | .122 | .357 | .0700 | .0860 | 250 |
| 7B | 3/8 | .145 | .427 | .0850 | .1030 | 430 |
| 8 | 7/16 | .169 | .498 | .1005 | .1205 | 760 |
| 9 | 1/2 | .193 | .568 | .1155 | .1375 | 1,060 |
| 10 | 9/16 | .217 | .638 | .1305 | .1545 | 1,440 |

TABLE III – DOVETAIL SLOT RECESS DIMENSIONS

| DIA DASH NO. | RECESS NO. | J | | K REF | W REF | RECESS TORQUE IN LBS. MIN |
|---|---|---|---|---|---|---|
| | | MIN | MAX | | | |
| 3 | 2 | .036 | .039 | .224 | .100 | 37 |
| 4 | 3 | .042 | .045 | .300 | .110 | 50 |
| 5 | 4 | .046 | .049 | .394 | .134 | 125 |
| 6 | 5 | .061 | .064 | .484 | .160 | 250 |
| 7B | 6 | .066 | .070 | .571 | .198 | 430 |
| 8 | 7 | .082 | .086 | .660 | .224 | 760 |
| 9 | 8 | .094 | .098 | .731 | .256 | 1,060 |
| 10 | 9 | .100 | .104 | .819 | .300 | 1,440 |

MATERIAL: ALLOY STEEL: 4140 (UNS G41400) PER AMS6382,
4340 (UNS G43406) PER AMS6415 OR AMS6484, OR
8740 (UNS G87400) PER AMS6322.

CRES: A286 (UNS S66286) SHALL CONFORM TO THE CHEMISTRY OF AMS5731, AMS5732, AMS5737 OR AMS5853.

TITANIUM ALLOY: 6AL-4V (UNS R56400) PER AMS4928 OR AMS4967.

HEAT TREAT: DEVELOP BASIC MATERIAL PROPERTIES AS FOLLOWS, WITH CONTROLS PER AMS2759 FOR ALLOY STEEL AND CRES AND AMS2801 FOR TITANIUM.

ALLOY STEEL: 160-180 KSI FTU
CRES: 160-190 KSI FTU (9)
TITANIUM: 160 KSI FTU MIN

FINISH: ALLOY STEEL: CADMIUM PLATE PER AMS-QQ-P-416, TYPE II, CLASS 2.

CRES: PASSIVATE IN ACCORDANCE WITH AMS2700 METHOD 1, TYPE 2 OR 8, CLASS 1 OR CADMIUM PLATE PER AMS-QQ-P-416, TYPE II, CLASS 2. (SEE CODE FOR FINISH)

TITANIUM: NONE OR ALUMINUM COATING PER NAS4006. (SEE CODE FOR FINISH)

THIS DRAWING SUPERSEDES ALL ANTECEDENT STANDARD DRAWINGS FOR THE SAME PRODUCT AND SHALL BECOME EFFECTIVE NO LATER THAN SIX MONTHS FROM THE LAST REVISION DATE.



USE OF OR RELIANCE UPON THIS DOCUMENT OR ANY NATIONAL AEROSPACE STANDARD IS ENTIRELY VOLUNTARY. AIA DOES NOT QUALIFY SUPPLIERS OR CERTIFY CONFORMANCE OF ITEMS PRODUCED UNDER NATIONAL AEROSPACE STANDARDS. AIA MAKES NO REPRESENTATION OR CLAIM RESPECTING (1) THE SUITABILITY OF ITEMS FOR ANY PARTICULAR APPLICATION OR (2) THE EXISTENCE OF OR APPLICABILITY THERETO OF PATENT OR TRADEMARKS RIGHTS.

© COPYRIGHT 2012 AEROSPACE INDUSTRIES ASSOCIATION OF AMERICA, INC. ALL RIGHTS RESERVED

AEROSPACE INDUSTRIES ASSOCIATION OF AMERICA, INC
1000 WILSON BLVD.
ARLINGTON, VA 22209

CODE: THE DIAMETER DASH NUMBER FOLLOWING THE MATERIAL CODE DESIGNATES THE NOMINAL DIAMETER IN .0625 INCH INCREMENTS AND THE GRIP DASH NUMBER FOLLOWING THE RECESS CODE DESIGNATES THE GRIP LENGTH IN .0625 INCH INCREMENTS. IF MORE THAN ONE CODE LETTER IS USED IN THE PART NUMBER FOLLOWING THE GRIP DASH NUMBER, ARRANGE THE CODE LETTERS ALPHABETICALLY.

MATERIAL: ~~CODE LETTER "A" FOLLOWING BASIC PART NUMBER INDICATES ALLOY STEEL~~. (8)
CODE LETTER "F" FOLLOWING BASIC PART NUMBER INDICATES ALLOY STEEL.
CODE LETTER "C" FOLLOWING BASIC PART NUMBER INDICATES CRES.
~~CODE LETTER "V" FOLLOWING BASIC PART NUMBER INDICATES TITANIUM 6AL-4V~~. (8)
CODE LETTER "K" FOLLOWING BASIC PART NUMBER INDICATES TITANIUM.

FINISH:

ALLOY STEEL: NO CODE LETTER FOLLOWING DIAMETER DASH NUMBER INDICATES CADMIUM PLATE.

CRES: NO CODE LETTER FOLLOWING GRIP DASH NUMBER INDICATES PASSIVATE. CODE LETTER "P" FOLLOWING GRIP DASH NUMBER INDICATES CADMIUM PLATE.

TITANIUM: NO CODE FOLLOWING GRIP DASH NUMBER INDICATES NO FINISH. CODE LETTER "G" FOLLOWING GRIP DASH NUMBER INDICATES ALUMINUM COAT.

RECESS: CODE LETTER "H" FOLLOWING DIA DASH NUMBER INDICATES DOVETAIL SLOT RECESS PER NASM33750.
CODE LETTER "R" FOLLOWING DIA DASH NUMBER INDICATES RIBBED OFFSET CRUCIFORM RECESS PER NASM14191 FOR DIA DASH NUMBERS 3, 4 AND 5.
CODE LETTER "T" FOLLOWING DIA DASH NUMBER INDICATES OFFSET CRUCIFORM RECESS PER NASM33781.

OVERSIZE: CODE LETTER "X" FOLLOWING THE GRIP DASH NUMBER INDICATES REPLACEMENT OVERSIZE REPAIR BOLT. (SEE SHEET 6)

EXAMPLE OF PART NUMBER:

NAS1581C4H5 =.2500-28 CRES BOLT, .312 GRIP LENGTH, PASSIVATED, NASM33750 DOVETAIL SLOT RECESS.
NAS1581C4T5P = .2500-28 CRES BOLT, .312 GRIP LENGTH, CADMIUM PLATE, NASM33781 OFFSET CRUCIFORM RECESS.
~~NAS1581V4R5 = .2500-28 TITANIUM BOLT, .312 GRIP LENGTH, NASM14191 RIBBED OFFSET CRUCIFORM RECESS~~.
NAS1581F4H5 = .2500-28 ALLOY STEEL BOLT, .312 GRIP LENGTH, CADMIUM PLATE, NASM33750 DOVETAIL SLOT RECESS.
NAS1581K4R5 = .2500-28 TITANIUM BOLT, .312 GRIP LENGTH, NASM14191 RIBBED OFFSET CRUCIFORM RECESS.
NAS1581K4T5G = .2500-28 TITANIUM BOLT, .312 GRIP LENGTH, NASM33781 OFFSET CRUCIFORM RECESS, ALUMINUM COATING.

NOTES:

(1) CONCENTRICITY: CONICAL SURFACE OF THE HEAD TO ØD SHALL BE WITHIN .003 FIM. ØD TO THREAD PITCH DIAMETER SHALL BE WITHIN .0045 FIM FOR DIA DASH NUMBER -3 THRU -5, AND SHALL BE WITHIN .006 FIM FOR DIA DASH NUMBER -6 AND LARGER.
(2) SURFACE TEXTURE: SEE PROCUREMENT SPECIFICATION.
(3) DELETED.
(4) BREAK SHARP EDGES AND REMOVE ALL BURRS.

THIS DRAWING SUPERSEDES ALL ANTECEDENT STANDARD DRAWINGS FOR THE SAME PRODUCT AND SHALL BECOME EFFECTIVE NO LATER THAN SIX MONTHS FROM THE LAST REVISION DATE.



FORM 09-01

USE OF OR RELIANCE UPON THIS DOCUMENT OR ANY NATIONAL AEROSPACE STANDARD IS ENTIRELY VOLUNTARY. AIA DOES NOT QUALIFY SUPPLIERS OR CERTIFY CONFORMANCE OF ITEMS PRODUCED UNDER NATIONAL AEROSPACE STANDARDS. AIA MAKES NO REPRESENTATION OR CLAIM RESPECTING (1) THE SUITABILITY OF ITEMS FOR ANY PARTICULAR APPLICATION OR (2) THE EXISTENCE OF OR APPLICABILITY THERETO OF PATENT OR TRADEMARKS RIGHTS.

© COPYRIGHT 2012 AEROSPACE INDUSTRIES ASSOCIATION OF AMERICA, INC. ALL RIGHTS RESERVED

(5) DIMENSIONS IN INCHES AND SHALL BE MET AFTER FINISH, IF APPLICABLE.
(6) NASM14191 RECESS APPLICABLE TO DIA DASH NUMBERS 3, 4 AND 5. NASM33781 AND NASM33750 RECESS APPLICABLE TO ALL DIA DASH NUMBERS.
(7) DELETED.
(8) MATERIAL CODES "A" AND "V" CANCELLED AFTER DECEMBER 1991. SEE "F", "K", OR "C" CODES. "F" AND "K" CODES REPRESENT REDUCED TENSILE VALUES BASED ON HEAD STRENGTH. FOR DESCRIPTION OF STATUS NOTES SEE NAS380.
(9) FOR CRES ONLY, THE EFFECT OF COLD WORK AND AGING INDUCED DURING THE MANUFACTURING CYCLE MAY INCREASE THE ULTIMATE TENSILE STRENGTH OF THE FINISHED PART, BUT ANY PART (TYPE I, II OR III AS LISTED IN NAS4003) SHALL NOT EXCEED 1.3 TIMES THE SPECIFIED TYPE I MINIMUM TENSILE VALUES AS LISTED IN NAS4003.
(10) FLUSH HEAD PROTRUSION VALUES AND GAGING METHOD PER NAS9800.
(11) GRIP LENGTH SHALL BE MEASURED FROM THE TOP OF BOLT HEAD TO THE END OF THE FULL CYLINDRICAL PORTION OF THE SHANK.
(12) ØA, E, AND H ARE INCLUDED FOR ENGINEERING REFERENCE PURPOSES ONLY AND ARE NOT TO BE USED FOR INSPECTION. VALUES ØA, E AND H ARE CALCULATED LIMITS RESULTING FROM THE TOLERANCE ON ØD, HEAD ANGLE AND THE APPLICABLE HEAD PROTRUSION AND GAGE DIAMETER AS DEFINED IN NAS9800.
(13) HEAD EDGE OUT OF ROUNDNESS SHALL NOT EXCEED "Y" FIM.
(14) SHANK SHALL BE STRAIGHT WITHIN "Z" VALUES FIM PER INCH OF LENGTH.
(15) POINT SHALL BE FLAT AND CHAMFERED. CHAMFER PLUS INCOMPLETE THREAD SHALL NOT EXCEED "U".
(16) PER APPLICABLE PROCUREMENT SPECIFICATION, THE BOLT RECESS SHALL BE TORQUE TESTED IN BOTH INSTALLATION AND REMOVAL DIRECTION WITH APPLICABLE NASM33781, NASM14191 OR NASM33750 DRIVER WITH AXIAL END PRESSURE NOT EXCEEDING 15 POUNDS. BOLTS ARE REJECTABLE IF MINIMUM TORQUE VALUES LISTED BELOW CAUSE FRACTURE OF BOLT OR DISTORTION WHICH RESULTS IN RAISE OF METAL AT EDGE OF RECESS EXCEEDING .005 ABOVE SURROUNDING AREA.
(17) THESE TENSILE VALUES APPLY TO CRES PARTS. SEE NOTE 8.
(18) THESE TENSILE VALUES APPLY TO ALLOY STEEL AND TITANIUM PARTS.
(19) DIAMETER DASH NUMBER 7 IS INACTIVE FOR DESIGN AFTER FEBRUARY 1977, USE 7B.
(20) THREADS IN ACCORDANCE WITH AS8879; MAJOR DIAMETER SHALL BE .001 BELOW MINUMUM SHANK DIAMETER.
(21) THIS STANDARD TAKES PRECEDENCE OVER DOCUMENTS REFERENCED HEREIN.
(22) FOR A286 CRES, MAGNETIC PERMEABILITY SHALL BE LESS THAN 2.0 (AIR = 1.0) FOR A FIELD STRENGTH H = 200 OERSTEDS USING A MAGNETIC PERMEABILITY INDICATOR PER ASTM A 342/A 342M, TEST METHOD 3.
(23) REFERENCED DOCUMENTS SHALL BE THE ISSUE IN EFFECT ON DATE OF INVITATIONS FOR BID.
(24) DIMENSIONING AND TOLERANCING PER ANSI Y14.5M-1982.
(25) TOLERANCES UNLESS OTHERWISE SPECIFIED: DECIMALS ± .030, ANGLES ± 1°.
(26) INTERMEDIATE OR LONGER LENGTHS MAY BE SPECIFIED BY THE USE OF WHOLE DASH NUMBERS ONLY.

PROCUREMENT SPECIFICATION:

NAS4002, NAS4003, NAS4004 AS APPLICABLE, EXCEPT AS NOTED. TENSILE STRENGTH AND RECESS TORQUE VALUES AS TABULATED HEREIN. TENSILE FATIGUE LIFE TESTS APPLY TO TITANIUM ONLY. FATIGUE TESTING SHALL BE PER NAS621 EXCEPT FATIGUE TEST LOAD SHALL BE 33.3% OF NAS1581 TABULATED TENSILE LOAD FOR HIGH LOAD AND R = .25. COLD WORKING OF HEAD TO SHANK FILLET IS NOT REQUIRED ON ALLOY STEEL OR CRES BOLTS.

AEROSPACE INDUSTRIES ASSOCIATION OF AMERICA, INC
1000 WILSON BLVD.
ARLINGTON, VA 22209

THIS DRAWING SUPERSEDES ALL ANTECEDENT STANDARD DRAWINGS FOR THE SAME PRODUCT AND SHALL BECOME EFFECTIVE NO LATER THAN SIX MONTHS FROM THE LAST REVISION DATE.



USE OF OR RELIANCE UPON THIS DOCUMENT OR ANY NATIONAL AEROSPACE STANDARD IS ENTIRELY VOLUNTARY. AIA DOES NOT QUALIFY SUPPLIERS OR CERTIFY CONFORMANCE OF ITEMS PRODUCED UNDER NATIONAL AEROSPACE STANDARDS. AIA MAKES NO REPRESENTATION OR CLAIM RESPECTING (1) THE SUITABILITY OF ITEMS FOR ANY PARTICULAR APPLICATION OR (2) THE EXISTENCE OF OR APPLICABILITY THERETO OF PATENT OR TRADEMARKS RIGHTS.

© COPYRIGHT 2012 AEROSPACE INDUSTRIES ASSOCIATION OF AMERICA, INC. ALL RIGHTS RESERVED

TABLE IV – GRIP AND LENGTH DIMENSIONS /25/

| GRIP DASH NO. | NOMINAL GRIP | LENGTH FOR DIA DASH NUMBERS LISTED ±.015 | | | | | | | | NOMINAL GRIP | GRIP DASH NO. |
|---|---|---|---|---|---|---|---|---|---|---|---|
| | | 3 | 4 | 5 | 6 | 7B | 8 | 9 | 10 | | |
| 2 | .125 | .487 | .528 | | | | | | | .125 | 2 |
| 3 | .187 | .549 | .590 | .688 | | | | | | .187 | 3 |
| 4 | .250 | .613 | .653 | .751 | .844 | .925 | 1.018 | | | .250 | 4 |
| 5 | .312 | .675 | .715 | .813 | .906 | .987 | 1.080 | | | .312 | 5 |
| 6 | .375 | .738 | .778 | .876 | .969 | 1.050 | 1.143 | 1.256 | 1.356 | .375 | 6 |
| 7 | .438 | .801 | .841 | .939 | 1.032 | 1.113 | 1.206 | 1.319 | 1.419 | .438 | 7 |
| 8 | .500 | .863 | .903 | 1.001 | 1.094 | 1.175 | 1.268 | 1.381 | 1.481 | .500 | 8 |
| 9 | .562 | .925 | .965 | 1.063 | 1.156 | 1.237 | 1.330 | 1.443 | 1.543 | .562 | 9 |
| 10 | .625 | .988 | 1.028 | 1.126 | 1.219 | 1.300 | 1.393 | 1.506 | 1.606 | .625 | 10 |
| 11 | .688 | 1.051 | 1.091 | 1.189 | 1.282 | 1.363 | 1.456 | 1.569 | 1.669 | .688 | 11 |
| 12 | .750 | 1.113 | 1.153 | 1.251 | 1.344 | 1.425 | 1.518 | 1.631 | 1.731 | .750 | 12 |
| 13 | .812 | 1.175 | 1.215 | 1.313 | 1.406 | 1.487 | 1.580 | 1.693 | 1.793 | .812 | 13 |
| 14 | .875 | 1.238 | 1.278 | 1.376 | 1.469 | 1.550 | 1.643 | 1.756 | 1.856 | .875 | 14 |
| 15 | .938 | 1.301 | 1.341 | 1.439 | 1.532 | 1.613 | 1.706 | 1.819 | 1.919 | .938 | 15 |
| 16 | 1.000 | 1.363 | 1.403 | 1.501 | 1.594 | 1.675 | 1.768 | 1.881 | 1.981 | 1.000 | 16 |
| 17 | 1.062 | 1.425 | 1.465 | 1.563 | 1.656 | 1.737 | 1.830 | 1.943 | 2.043 | 1.062 | 17 |
| 18 | 1.125 | 1.488 | 1.528 | 1.626 | 1.719 | 1.800 | 1.893 | 2.006 | 2.106 | 1.125 | 18 |
| (12) 19 | 1.188 | 1.551 | 1.591 | 1.689 | 1.782 | 1.863 | 1.956 | 2.069 | 2.169 | 1.188 | 19 |
| 20 | 1.250 | 1.613 | 1.653 | 1.751 | 1.844 | 1.925 | 2.018 | 2.131 | 2.231 | 1.250 | 20 |
| 21 | 1.312 | 1.675 | 1.715 | 1.813 | 1.906 | 1.987 | 2.080 | 2.193 | 2.293 | 1.312 | 21 |
| 22 | 1.375 | 1.738 | 1.778 | 1.876 | 1.969 | 2.050 | 2.143 | 2.256 | 2.356 | 1.375 | 22 |
| 23 | 1.438 | 1.801 | 1.841 | 1.939 | 2.032 | 2.113 | 2.206 | 2.319 | 2.419 | 1.438 | 23 |
| 24 | 1.500 | 1.863 | 1.903 | 2.001 | 2.094 | 2.175 | 2.268 | 2.381 | 2.481 | 1.500 | 24 |
| 25 | 1.562 | 1.925 | 1.965 | 2.063 | 2.156 | 2.237 | 2.330 | 2.443 | 2.543 | 1.562 | 25 |
| 26 | 1.625 | 1.988 | 2.028 | 2.126 | 2.219 | 2.300 | 2.393 | 2.506 | 2.606 | 1.625 | 26 |
| 27 | 1.688 | 2.051 | 2.091 | 2.189 | 2.282 | 2.363 | 2.456 | 2.569 | 2.669 | 1.688 | 27 |
| 28 | 1.750 | 2.113 | 2.153 | 2.251 | 2.344 | 2.425 | 2.518 | 2.631 | 2.731 | 1.750 | 28 |
| 29 | 1.812 | 2.175 | 2.215 | 2.313 | 2.406 | 2.487 | 2.580 | 2.693 | 2.793 | 1.812 | 29 |
| 30 | 1.875 | 2.238 | 2.278 | 2.376 | 2.469 | 2.550 | 2.643 | 2.756 | 2.856 | 1.875 | 30 |
| 31 | 1.938 | 2.301 | 2.341 | 2.439 | 2.532 | 2.613 | 2.706 | 2.819 | 2.919 | 1.938 | 31 |
| 32 | 2.000 | 2.363 | 2.403 | 2.501 | 2.594 | 2.675 | 2.768 | 2.881 | 2.981 | 2.000 | 32 |
| 34 | 2.125 | 2.488 | 2.528 | 2.626 | 2.719 | 2.800 | 2.893 | 3.006 | 3.106 | 2.125 | 34 |
| 36 | 2.250 | 2.613 | 2.653 | 2.751 | 2.844 | 2.925 | 3.018 | 3.131 | 3.231 | 2.250 | 36 |
| 38 | 2.375 | 2.738 | 2.778 | 2.876 | 2.969 | 3.050 | 3.143 | 3.256 | 3.356 | 2.375 | 38 |
| 40 | 2.500 | 2.863 | 2.903 | 3.001 | 3.094 | 3.175 | 3.268 | 3.381 | 3.481 | 2.500 | 40 |
| 42 | 2.625 | 2.988 | 3.028 | 3.126 | 3.219 | 3.300 | 3.393 | 3.506 | 3.606 | 2.625 | 42 |
| 44 | 2.750 | 3.113 | 3.153 | 3.251 | 3.344 | 3.425 | 3.518 | 3.631 | 3.731 | 2.750 | 44 |
| 46 | 2.875 | 3.238 | 3.278 | 3.376 | 3.469 | 3.550 | 3.643 | 3.756 | 3.856 | 2.875 | 46 |
| 48 | 3.000 | 3.363 | 3.403 | 3.501 | 3.594 | 3.675 | 3.768 | 3.881 | 3.981 | 3.000 | 48 |

AEROSPACE INDUSTRIES ASSOCIATION OF AMERICA, INC
1000 WILSON BLVD.
ARLINGTON, VA 22209

THIS DRAWING SUPERSEDES ALL ANTECEDENT STANDARD DRAWINGS FOR THE SAME PRODUCT AND SHALL BECOME EFFECTIVE NO LATER THAN SIX MONTHS FROM THE LAST REVISION DATE.



USE OF OR RELIANCE UPON THIS DOCUMENT OR ANY NATIONAL AEROSPACE STANDARD IS ENTIRELY VOLUNTARY. AIA DOES NOT QUALIFY SUPPLIERS OR CERTIFY CONFORMANCE OF ITEMS PRODUCED UNDER NATIONAL AEROSPACE STANDARDS. AIA MAKES NO REPRESENTATION OR CLAIM RESPECTING (1) THE SUITABILITY OF ITEMS FOR ANY PARTICULAR APPLICATION OR (2) THE EXISTENCE OF OR APPLICABILITY THERETO OF PATENT OR TRADEMARKS RIGHTS.

© COPYRIGHT 2012 AEROSPACE INDUSTRIES ASSOCIATION OF AMERICA, INC. ALL RIGHTS RESERVED

AEROSPACE INDUSTRIES ASSOCIATION OF AMERICA, INC
1000 WILSON BLVD.
ARLINGTON, VA 22209

THIS DRAWING SUPERSEDES ALL ANTECEDENT STANDARD DRAWINGS FOR THE SAME PRODUCT AND SHALL BECOME EFFECTIVE NO LATER THAN SIX MONTHS FROM THE LAST REVISION DATE.

TABLE IV – GRIP AND LENGTH DIMENSIONS (CONT'D)

| GRIP DASH NO. | NOMINAL GRIP | LENGTH FOR DIA DASH NUMBERS LISTED ±.015 | | | | | | | | NOMINAL GRIP | GRIP DASH NO. |
|---|---|---|---|---|---|---|---|---|---|---|---|
| | | 3 | 4 | 5 | 6 | 7B | 8 | 9 | 10 | | |
| 50 | 3.125 | 3.488 | 3.528 | 3.626 | 3.719 | 3.800 | 3.893 | 4.006 | 4.106 | 3.125 | 50 |
| 52 | 3.250 | 3.613 | 3.653 | 3.751 | 3.844 | 3.925 | 4.018 | 4.131 | 4.231 | 3.250 | 52 |
| 54 | 3.375 | 3.738 | 3.778 | 3.876 | 3.969 | 4.050 | 4.143 | 4.256 | 4.356 | 3.375 | 54 |
| 56 | 3.500 | 3.863 | 3.903 | 4.001 | 4.094 | 4.175 | 4.268 | 4.381 | 4.481 | 3.500 | 56 |
| 58 | 3.625 | 3.988 | 4.028 | 4.126 | 4.219 | 4.300 | 4.393 | 4.506 | 4.606 | 3.625 | 58 |
| 60 | 3.750 | 4.113 | 4.153 | 4.251 | 4.344 | 4.425 | 4.518 | 4.631 | 4.731 | 3.750 | 60 |
| 62 | 3.875 | 4.238 | 4.278 | 4.376 | 4.469 | 4.550 | 4.643 | 4.756 | 4.856 | 3.875 | 62 |
| 64 | 4.000 | 4.363 | 4.403 | 4.501 | 4.594 | 4.675 | 4.768 | 4.881 | 4.981 | 4.000 | 64 |
| 66 | 4.125 | 4.488 | 4.528 | 4.626 | 4.719 | 4.800 | 4.893 | 5.006 | 5.106 | 4.125 | 66 |
| 68 | 4.250 | 4.613 | 4.653 | 4.751 | 4.844 | 4.925 | 5.018 | 5.131 | 5.231 | 4.250 | 68 |
| 70 | 4.375 | 4.738 | 4.778 | 4.876 | 4.969 | 5.050 | 5.143 | 5.256 | 5.356 | 4.375 | 70 |
| 72 | 4.500 | 4.863 | 4.903 | 5.001 | 5.094 | 5.175 | 5.268 | 5.381 | 5.481 | 4.500 | 72 |
| 74 | 4.625 | 4.988 | 5.028 | 5.126 | 5.219 | 5.300 | 5.393 | 5.506 | 5.606 | 4.625 | 74 |
| 76 | 4.750 | 5.113 | 5.153 | 5.251 | 5.344 | 5.425 | 5.518 | 5.631 | 5.731 | 4.750 | 76 |
| 78 | 4.875 | 5.238 | 5.278 | 5.376 | 5.469 | 5.550 | 5.643 | 5.756 | 5.856 | 4.875 | 78 |
| 80 | 5.000 | 5.363 | 5.403 | 5.501 | 5.594 | 5.675 | 5.768 | 5.881 | 5.981 | 5.000 | 80 |
| 82 | 5.125 | 5.488 | 5.528 | 5.626 | 5.719 | 5.800 | 5.893 | 6.006 | 6.106 | 5.125 | 82 |
| 84 | 5.250 | 5.613 | 5.653 | 5.751 | 5.844 | 5.925 | 6.018 | 6.131 | 6.231 | 5.250 | 84 |
| 86 | 5.375 | 5.738 | 5.778 | 5.876 | 5.969 | 6.050 | 6.143 | 6.256 | 6.356 | 5.375 | 86 |
| 88 | 5.500 | 5.863 | 5.903 | 6.001 | 6.094 | 6.175 | 6.268 | 6.381 | 6.481 | 5.500 | 88 |
| 90 | 5.625 | 5.988 | 6.028 | 6.126 | 6.219 | 6.300 | 6.393 | 6.506 | 6.606 | 5.625 | 90 |
| 92 | 5.750 | 6.113 | 6.153 | 6.251 | 6.344 | 6.425 | 6.518 | 6.631 | 6.731 | 5.750 | 92 |
| 94 | 5.875 | 6.238 | 6.278 | 6.376 | 6.469 | 6.550 | 6.643 | 6.756 | 6.856 | 5.875 | 94 |
| 96 | 6.000 | 6.363 | 6.403 | 6.501 | 6.594 | 6.675 | 6.768 | 6.881 | 6.981 | 6.000 | 96 |

NOTE: GRIP EQUALS GRIP DASH NUMBER TIMES .0625 (CONVERTED TO 3 DECIMAL PLACES PER ANSI Y14.5M-1982). LENGTH EQUALS GRIP LENGTH PLUS "T".



USE OF OR RELIANCE UPON THIS DOCUMENT OR ANY NATIONAL AEROSPACE STANDARD IS ENTIRELY VOLUNTARY. AIA DOES NOT QUALIFY SUPPLIERS OR CERTIFY CONFORMANCE OF ITEMS PRODUCED UNDER NATIONAL AEROSPACE STANDARDS. AIA MAKES NO REPRESENTATION OR CLAIM RESPECTING (1) THE SUITABILITY OF ITEMS FOR ANY PARTICULAR APPLICATION OR (2) THE EXISTENCE OF OR APPLICABILITY THERETO OF PATENT OR TRADEMARKS RIGHTS.

© COPYRIGHT 2012 AEROSPACE INDUSTRIES ASSOCIATION OF AMERICA, INC. ALL RIGHTS RESERVED

AEROSPACE INDUSTRIES ASSOCIATION OF AMERICA, INC
1000 WILSON BLVD.
ARLINGTON, VA 22209

THIS DRAWING SUPERSEDES ALL ANTECEDENT STANDARD DRAWINGS FOR THE SAME PRODUCT AND SHALL BECOME EFFECTIVE NO LATER THAN SIX MONTHS FROM THE LAST REVISION DATE.

## RESTRICTED USAGE FOR REPAIR WORK ONLY

.0156 AND .0312 OVERSIZE SHANK FOR REPLACEMENT OF BOLTS SHOWN ON SHEET 1

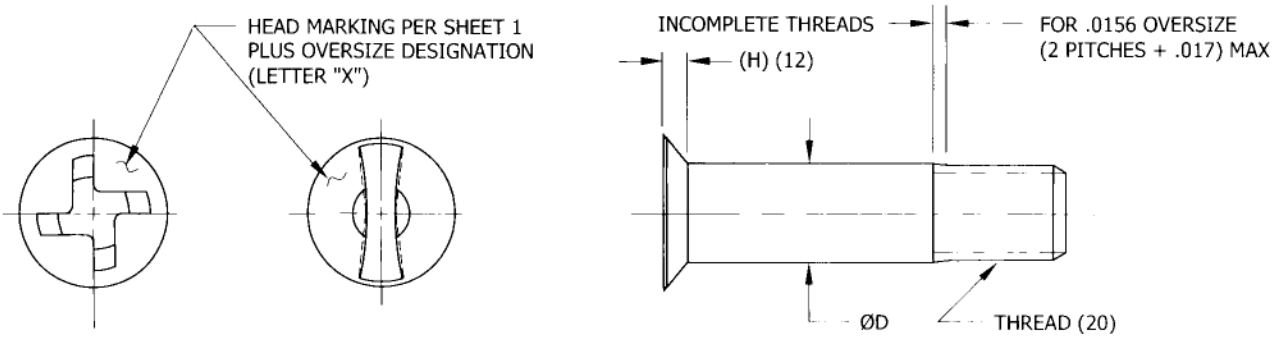


FIGURE 4 – OVERSIZE DIMENSIONS

TABLE V – OVERSIZE DIMENSIONS

| .0156 OVERSIZE | | | | | | .0312 OVERSIZE |
|---|---|---|---|---|---|---|
| OVERSIZE DIA DASH NO. | ØD | | | | H REF (12) | |
| | UNPLATED | | PLATED | | | |
| | MAX | MIN | MAX | MIN | | |
| 3( )( )( )X | .2051 | .2046 | .2051 | .2041 | .043 | USE NAS1580( )3( )( )( )Y |
| 4( )( )( )X | .2651 | .2646 | .2651 | .2641 | .057 | USE NAS1580( )4( )( )( )Y |
| 5( )( )( )X | .3276 | .3271 | .3276 | .3266 | .065 | USE NAS1580( )5( )( )( )Y |
| 6( )( )( )X | .3901 | .3896 | .3901 | .3891 | .075 | USE NAS1580( )6( )( )( )Y |
| 7( )( )( )X | .4526 | .4521 | .4526 | .4516 | .095 | USE NAS1580( )7( )( )( )Y |
| 8( )( )( )X | .5151 | .5146 | .5151 | .5141 | .103 | USE NAS1580( )8( )( )( )Y |
| 9( )( )( )X | .5771 | .5766 | .5771 | .5761 | .113 | USE NAS1580( )9( )( )( )Y |
| 10( )( )( )X | .6396 | .6391 | .6396 | .6386 | .123 | USE NAS1580( )10( )( )( )Y |

NOTES: (1) SEE SHEETS 1 THRU 5 FOR MATERIAL, FINISH, PROCUREMENT INFORMATION AND DIMENSIONS NOT SHOWN.
(2) MINIMUM TENSILE LOADS FOR "X" CODED PARTS ARE 85% OF THE STANDARD LOADS TABULATED ON SHEET 1.



FORM 09-01

USE OF OR RELIANCE UPON THIS DOCUMENT OR ANY NATIONAL AEROSPACE STANDARD IS ENTIRELY VOLUNTARY. AIA DOES NOT QUALIFY SUPPLIERS OR CERTIFY CONFORMANCE OF ITEMS PRODUCED UNDER NATIONAL AEROSPACE STANDARDS. AIA MAKES NO REPRESENTATION OR CLAIM RESPECTING (1) THE SUITABILITY OF ITEMS FOR ANY PARTICULAR APPLICATION OR (2) THE EXISTENCE OF OR APPLICABILITY THERETO OF PATENT OR TRADEMARKS RIGHTS.