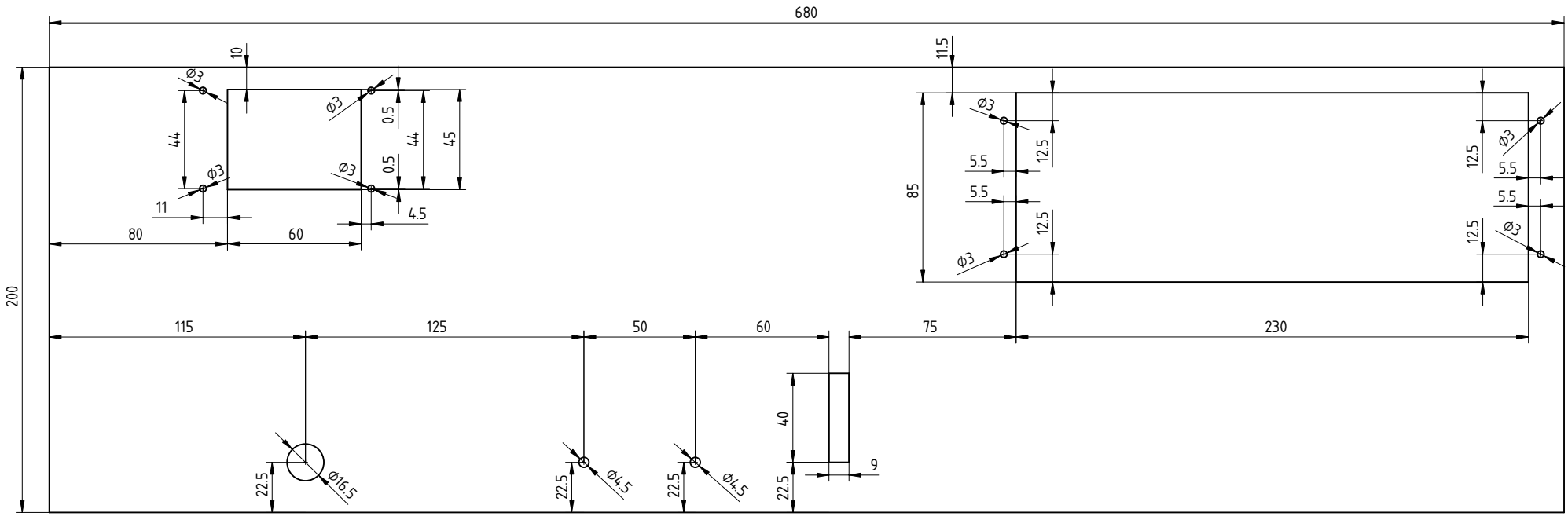

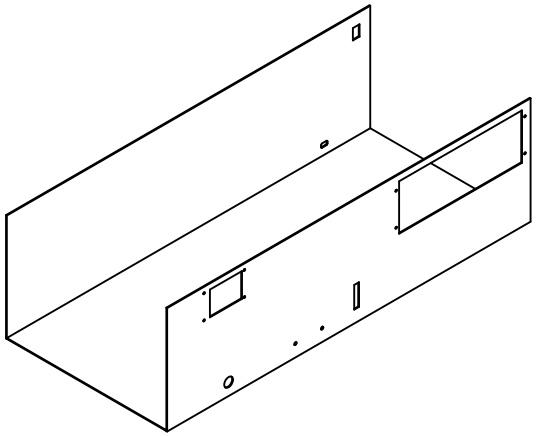

DESIGNED BY:
Kostoski Stefan

DATE:
13 September 2023

Front Panel

Flight Simulator Platform Enclosure