Teleoperation System with 6-DoF Haptic Feedback for Manipulation

*Author One Author Two Author Three**

Optional dedication here. If no dedication is required, please leave blank

A. N. Author, A. N. O. Author
Address
Email Address:
A. N. O. Author
Address

Keywords: *Teleperation, Haptic Feedback, Manipulation*

Aerial manipulations using aerial robots are gaining attention for their work in high places and hazardous locations. While autonomous control of robots has advanced, teleoperation by human operators is still necessary for tasks in complex and unknown environments. In such teleoperation, haptic feedback that allows the operator to perceive the forces exerted on the robot is important. In many cases, underactuated multirotors are used for teleoperation, but the use of fully actuated multirotors is advancing for more complex tasks. Conventional teleoperation methods cannot achieve both intuitive control corresponding to the increased degrees of freedom and feedback of all 6-dimensional force and torque. Therefore, in this study, we propose an operating device capable of expressing 6-dimensional force and torque, and a teleoperation system that makes it easy to perform work remotely using a fully actuated multirotor. The operating device has a floating base with a thrust and vectoring mechanism, enabling independent control of position and attitude and independent presentation of forces and torques. The teleoperation system has Position Mapping Mode and Velocity Mapping Mode settings, enabling both rapid movement in a wide area and precise movement for work. We verified the effectiveness of the proposed method for aerial telemanipulations through experiments cleaning tilted walls. Our new framework contributes to the realization of more complex aerial tasks using aerial robots.

1 Introduction

In recent years, efforts have advanced to use robots to replace human workers in hazardous environments such as chemical plants and disaster sites. Utilizing robots enables enhanced worker safety while improving operational efficiency and continuity. The ideal scenario for task replacement involves robots performing operations completely autonomously, achieving unmanned operation. Research on robotic autonomous control has made remarkable progress. However, in real-world scenarios with unknown operational environments and numerous disturbances, fully replacing humans' advanced cognitive abilities and flexible judgment capabilities remains unachieved. Therefore, remote operation, which incorporates humans into the control loop, is necessary. When performing tasks via remote operation, feedback information enabling the operator to accurately perceive the remote environment is crucial. Feedback information is diverse, including visual and auditory data. However, for manipulations involving contact, haptic feedback that directly conveys force is particularly useful. It is known that enabling operators to directly perceive the forces exerted by robots in the remote environment contributes to improved task execution precision and safety, as well as reduced cognitive load on the operator. Indeed, in medical robots and industrial robots requiring precision manipulation, the introduction of haptic feedback has been reported to increase task success rates and improve operability. To implement haptic feedback, a control device equipped with actuators is necessary. Commonly used haptic devices feature a multi-jointed structure mounted on a fixed base. These transmit force to the operator via motors installed at the joints. While such devices can transmit all six degrees of force and torque (wrench), challenges include hindering the operator's smooth hand movements, having a limited workspace, and low portability. To address these issues, thrust-based angled haptics devices are being researched. For example, Heo et al. achieved representation of three degrees of freedom of force in the translational direction by placing propellers on each face of a cuboid device. Sasaki et al. achieved presentation of one degree of freedom of translational force and two-dimensional rotational torque by attaching quadrotors to both ends of a long rod. However, these devices have limited degrees of freedom for force and torque presentation and cannot represent all wrenches applied to a robot's end-effector at a remote location. Therefore, this study proposes

a novel anground haptics device capable of independently presenting all six degrees of wrench independently using a thrust deflection mechanism. The proposed device is detailed in Chapter XXX. In remote manipulation, where the operator physically interacts with the external environment through the robot, achieving both stability and operational transparency is a critical challenge. As a method to realize this balance, Ferraguti et al. proposed the energy tank approach. This method introduces a virtual energy reservoir within the system. By constraining control inputs based on the energy stored there, it enables flexible force control while maintaining passivity, leading to numerous applied research developments. However, conventional energy tank methods primarily target energy flows within the robot or communication channels. In actual remote operation, changes in the rigidity and viscosity of the operator's hand and arm significantly impact the overall energy exchange. Therefore, it is crucial to model the operator as a single dynamic system, estimate its characteristics, and incorporate them. Shin et al. and Buzzi et al. estimated operator arm impedance using least squares methods. Furthermore, Sheng et al. reported a framework for surgical robots combining RLS-based hand stiffness estimation with energy tank control. These represent important attempts aiming to integrate human model estimation with passivity assurance. This study advances these methods by proposing a teleoperation architecture that integrates online estimation of operator impedance with passivity assurance based on energy tanks. Details of the proposed architecture are described in Chapter XXX. The contributions of this study are summarized as follows:

- We propose an angled remote control device that can independently present all six degrees of freedom to the operator using a thrust deflection mechanism.
- We propose a remote control architecture integrating online estimation of operator impedance with passivity assurance based on an energy tank.
- XXX Experiment

To the best of our knowledge, this is the first device using thrust to provide all six degrees of freedom of a wrench in an angled-ground configuration.

2 Teleoperation Device

2.1 Design of Device

The teleoperation device proposed in this research enables operators to perform tasks through remote robots easily. Most tasks performed by humans require the use of some kind of tool. Humans interact with the external environment through the handles of these tools and obtain information about the reaction forces. Therefore, when performing tasks remotely, it is most intuitive to grip and operate the device as if the robot's tools were physically present in the operator's hands.
As mentioned in Sec. **??**, in teleoperation using robots, the device must be capable of floating and independently providing 6-dimensional wrench. To achieve these functions, we use thrust and a thrust vectoring mechanism. The thrust vectoring mechanism is a modified version of the one proposed by Zhao et al [1]. As shown in the right of Fig. 1, this thrust vectoring mechanism can rotate in 2 directions. By attaching 2 rotors that generate thrust at both ends, it has a total of 4-DoF. By attaching this module to both ends of a long rod modeled like a tool, the device as a whole can obtain 8-DoF for control input. Since this is larger than the dimension 6 of the wrench we want to present, it allows us to present all wrenches with redundancy.

2.2 Control of Device

All of the following is considered in a coordinate system fixed to the device. The DoF of control of this device are as shown on the top side of Fig. 2, but consider a virtual thrust as shown on the bottom side

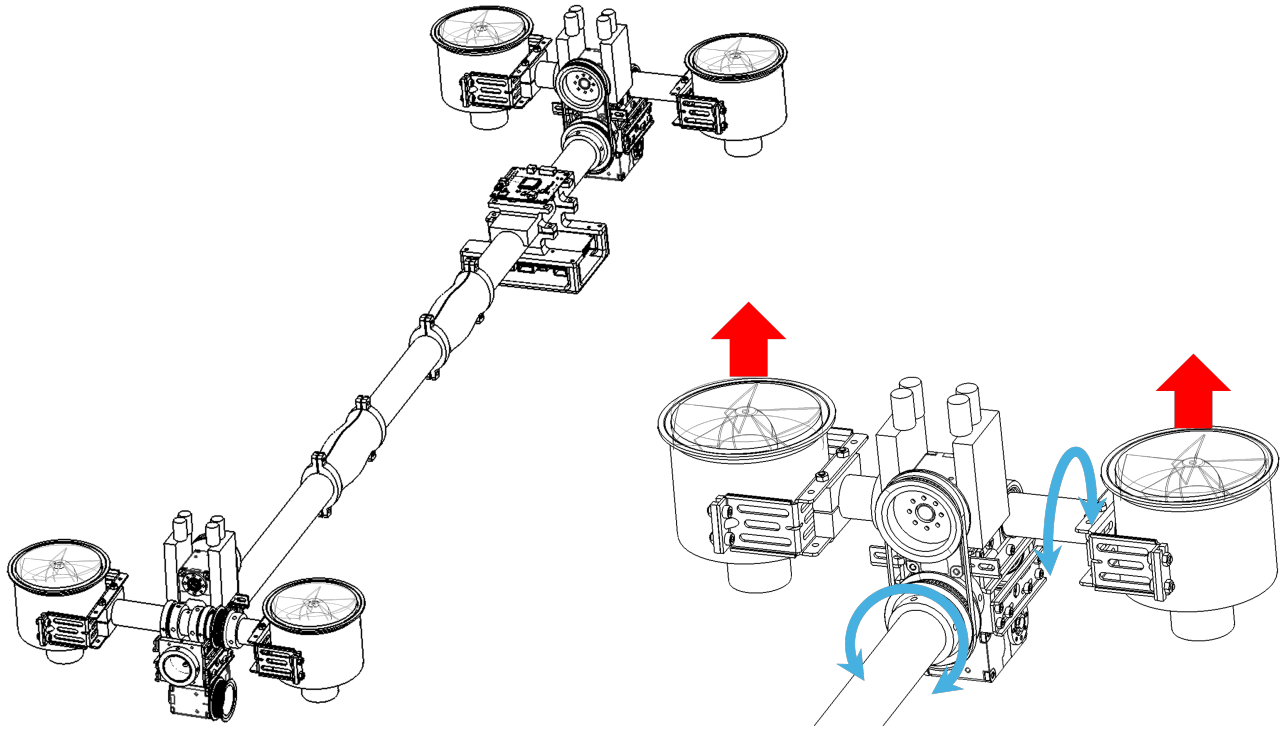

Figure 1: Hardware design of proposed teleoperation device. Left:Whole view. Right:Thrust vectoring mechanism. The red arrows mean the thrust, and blue arrows is the rotational direction.

of Fig. 2. The allocation matrix from virtual thrust to desired wrench can be expressed as

$$Q_1 = \begin{pmatrix} I_3 & I_3 \\ skew(\boldsymbol{p}_{f_{\mathrm{v1}}}) & skew(\boldsymbol{p}_{f_{\mathrm{v2}}}) \end{pmatrix}, \tag{1}$$

where $I_3 \in R^{3\times3}$ is identity matrix, $\boldsymbol{p}_{f_{\mathrm{v}i}}$ is position vector of the virtual thrust $\boldsymbol{f}_{\mathrm{v}i}$ point in the coordinate system of the handle, and $skew(\boldsymbol{p})$ is skew-symmetric matrix of $\boldsymbol{p}$. The virtual thrust $\boldsymbol{f}_{\mathrm{v}} = [\boldsymbol{f}_{\mathrm{v1}}, \boldsymbol{f}_{\mathrm{v2}}]^T$ is calculated from the desired wrench after removing torque around x-axis $\boldsymbol{W}_{\mathrm{des}} = [F_{\mathrm{des}x}, F_{\mathrm{des}y}, F_{\mathrm{des}z}, T_{\mathrm{des}y}, T_{\mathrm{des}z}]^T$ as follows.

$$\boldsymbol{f}_{\mathrm{v}} = Q_1^{\#}(\boldsymbol{W}_{\mathrm{des}} + \boldsymbol{g}), \tag{2}$$

where $\boldsymbol{g} = [0, 0, Mg, 0, 0]^T$ is the gravity term, which is the product of the mass of the device M and the gravitational acceleration. And $Q_1^{\#} \in R^{6\times5}$ is the pseudo-inverse of Q_1 with excluding the 4th row corresponding to torque around the x-axis. The vectoring angles is calculated as follows:

$$\theta_i = \arctan\left(-\frac{f_{\mathrm{v}iy}}{f_{\mathrm{v}iz}}\right), \tag{3}$$

$$\phi_i = \arctan\left(\frac{f_{\mathrm{v}ix}}{-f_{\mathrm{v}iy}\cdot\sin(\theta_i) + f_{\mathrm{v}iz}\cdot\cos(\theta_i)}\right). \tag{4}$$

When moving the vectoring mechanism, the following counter torque occurs around the x-axis.

$$\tau_{\mathrm{counter}} = \sum I_i \ddot{\theta}_i, \tag{5}$$

where I_i is the ineria of the vectoring module around x-axis.
The allocation matrix from virtual thrust and torque around x-axis to the actual thrust can be expressed as

$$Q_2 = \begin{pmatrix} 1 & 0 & 1 & 0 \\ 0 & 1 & 0 & 1 \\ d_1\cos\psi_1 & -d_2\cos\psi_2 & d_3\cos\psi_1 & -d_4\cos\psi_2 \end{pmatrix}, \tag{6}$$

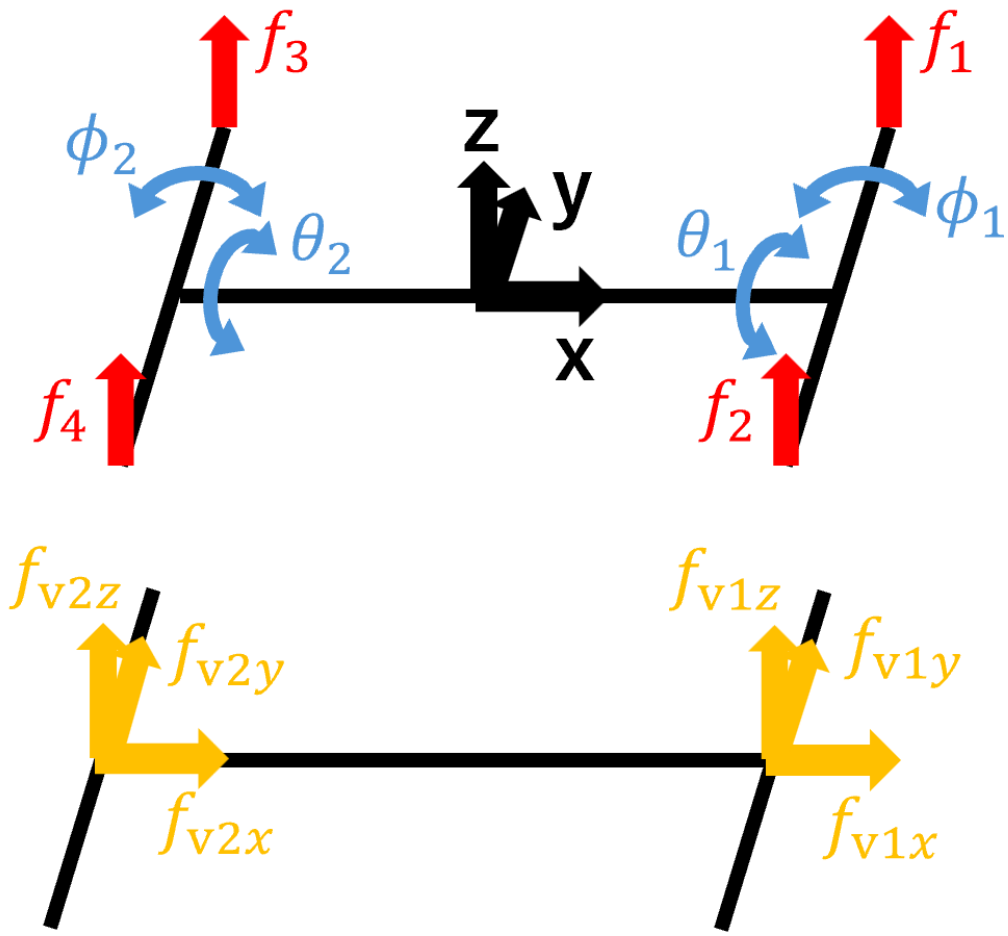

Figure 2: Top:Control DoF of the proposed device. The black allows shows the hadle coordinate system fixed on the device. Bottom:Virtual thrust considered on a control model.

where d_1, d_2, d_3, d_4 is the distance from each rotor to the longitudinal axis of the device. Then, the actual thrust $\boldsymbol{f} = [f_1, f_2, f_3, f_4]^T$ is calculated as follows:

$$\boldsymbol{f} = Q_2^{\#} \begin{bmatrix} |\boldsymbol{f}_{\mathrm{v1}}| \\ |\boldsymbol{f}_{\mathrm{v2}}| \\ T_{\mathrm{des}x} + \tau_{\mathrm{counter}} \end{bmatrix}, \tag{7}$$

where $Q_2^{\#} \in R^{4\times 3}$ is the pseuso-inverse of Q_2. Since the range of force that can be exerted by the rotor is limited, the solution obtained here is not always feasible. If the solution is outside the feasible range, substitute the closest feasible value and recalculate the solution.

3 Teleoperation Architecture

This chapter describes a teleoperation system for performing tasks using a remote robot. The system consists of generating position and attitude commands from the operator to the robot, and generating wrench feedback from the robot to the operator.

3.1 Position and Atiitude Operating Command

Two main functions are required to control the position and attitude of a remote robot. One is long-distance movement, which is the function of quickly moving within the wide area. The other is precise movement, which is a function for performing detailed tasks accurately. To achieve both of these functions, we developed two operating modes: Position Mapping Mode and Velocity Mapping Mode.

3.1.1 Position Mappng Mode

We propose Position Mapping Mode for precise tasks. In this mode, the target position $\boldsymbol{p}_{\text{target}}(t)$ and quaternion $\boldsymbol{q}_{\text{target}}(t)$ is generated as follows:

$$\boldsymbol{p}_{\text{target}}(t) = \boldsymbol{p}_{\text{robot}}(t_0) + \boldsymbol{k}_1 \odot (\boldsymbol{p}_{\text{device}}(t) - \boldsymbol{p}_{\text{device}}(t_0)), \tag{8}$$

$$\boldsymbol{q}_{\text{target}}(t) = \boldsymbol{q}_{\text{device}}(t), \tag{9}$$

where t_0 refers to the moment of entering this mode, and $\odot$ is the Hadamard product, which is the product of each element of the vector. And $\boldsymbol{k}_1$ is a scaling parameter that can be adjusted as appropriate depending on the task type.

3.1.2 Velocity Mappng Mode

On the other hand, we propose Velocity Mapping Mode for long-distance movement. In this mode, the target velocity $\dot{\boldsymbol{p}}_{\text{target}}(t)$ and angular velocity $\dot{\boldsymbol{q}}_{\text{target}}(i)$ is generated as follows:

$$\dot{\boldsymbol{p}}_{\text{target}}(t) = \boldsymbol{k}_2 \odot (\boldsymbol{p}_{\text{device}}(t) - \boldsymbol{p}_{\text{device}}(t_0)), \tag{10}$$

$$\dot{\boldsymbol{q}}_{\text{target}}(t) = \boldsymbol{k}_3 \odot (\boldsymbol{q}_{\text{device}}(t) - \boldsymbol{q}_{\text{device}}(t_0)), \tag{11}$$

where $\boldsymbol{k}_2$ and $\boldsymbol{k}_3$ are scaling parameters. Adding the amount of change in the device to the robot's position and quaternion at each time point is equivalent to controlling the robot's velocity.
In this mode, it is important for the operator to recognize the initial origin of the device, as well as when operating with a joystick. The device proposed in this study enables the operator to recognize the origin by providing a reaction wrench corresponding to the amount of movement from the origin of the device. If the magnitude of the feedback wrench is made proportional to the amount of device movement, as with commands and control, the wrench near the origin becomes small, making it easy to lose sight of the origin. Therefore, logarithmic conversion is used as follows:

$$\boldsymbol{f}_{\text{feedback}} = \log(\boldsymbol{k}_4 \odot (\boldsymbol{p}_{\text{device}}(t) - \boldsymbol{p}_{\text{device}}(t_0))), \tag{12}$$

$$\boldsymbol{\tau}_{\text{feedback}} = \log(\boldsymbol{k}_5 \odot (\boldsymbol{q}_{\text{device}}(t) - \boldsymbol{q}_{\text{device}}(t_0))), \tag{13}$$

where $\boldsymbol{k}_4$ and $\boldsymbol{k}_5$ are scaling parameters. This conversion increases the feedback wrench near the origin, making it easier to recognize the origin. In addition, in order to reduce the difficulty of operation, Stop Zone where no commands are sent to the robot is set near the origin.
By using these two modes appropriately, it is possible to perform tasks quickly and precisely in a large workspace.

3.2 Wrench feedback from robot

This section describes a control method for determining the feedback wrench applied to the operator. (XXX in the figure) By estimating the impedance model of the operator's arm, we estimate the energy exchange between the system and the operator. Then, based on the energy tank method, we guarantee the passivity of the system by modifying the feedback wrench.

3.2.1 Impedance model of the operator

The operator's hand movements can be represented by the following impedance model.

$$F(t) = M\ddot{x}(t) + B\dot{x}(t) + K(x(t) - x_{\text{ref}}), \tag{14}$$

where $F(t)$ is the force applied to the operator's hand, and M, B, and K represent equivalent mass, viscous damping, and stiffness, respectively, which are time-dependent. x_{ref} is the operator's reference origin, i.e., the initial position of the operator system used for command transmission in teleoperation. This

model is assumed to hold independently for each element of the 6-degree-of-freedom wrench. Equation(14) can be converted into the following linear regression equation via a discrete-time representation.

$$F_i \approx \boldsymbol{\phi}_i^\top \boldsymbol{\theta}_i \quad \boldsymbol{\phi}_i = \begin{bmatrix} \ddot{x}_i & \dot{x}_i & x_i - x_{\mathrm{ref}} \end{bmatrix}^\top \quad \boldsymbol{\theta}_i = \begin{bmatrix} M_i & B_i & K_i \end{bmatrix}^\top \tag{15}$$

Since the operator's impedance $\boldsymbol{\theta}_i = \begin{bmatrix} M_i & B_i & K_i \end{bmatrix}^\top$ changes over time, it is estimated online using RLS.

$$Q_i = \frac{1}{\lambda}(Q_{i-1} - \frac{Q_{i-1}\boldsymbol{\phi}_i\boldsymbol{\phi}_i^\top Q_{i-1}}{\lambda + \boldsymbol{\phi}_i^\top Q_{i-1}\boldsymbol{\phi}_i}) \tag{16}$$

$$\boldsymbol{\theta}_i = \boldsymbol{\theta}_{i-1} + Q_i\boldsymbol{\phi}_i(y_i - \boldsymbol{\phi}_i^\top \boldsymbol{\theta}_{i-1}) \tag{17}$$

where $\boldsymbol{\phi}_i = \begin{bmatrix} \ddot{x}_i & \dot{x}_i & x_i \end{bmatrix}^\top$ and $y_i = f_{\mathrm{feedback}}(i-1)$ is the wrench components presented to the operator in the previous step. Also, $\lambda \in (0, 1]$ is the forggeting factor, and Q_0 is the initial covariance matrix.

3.2.2 Passivity guarantee based on the energy tank method

To ensure operator safety, it is necessary to guarantee the passivity of the system. Consider a system consisting of the teleoperation device and a follower robot. The system exchanges energy with the operator through the device and with environmental objects through the robot. When the outflow direction from the system is defined as positive, the energy balance between the robot and environmental objects per unit time step is expressed as

$$P_{\mathrm{env}}(i) = \boldsymbol{w}_{\mathrm{robot}}^\top(i)\boldsymbol{v}_{\mathrm{robot}}(i) - \boldsymbol{w}_{\mathrm{env}}^\top(i)\boldsymbol{v}_{\mathrm{robot}}(i) \tag{18}$$

where XXX. When the environmental object can be considered stationary during one step, $\boldsymbol{w}_{\mathrm{robot}}(i) = \boldsymbol{w}_{\mathrm{env}}(i)$ holds, so the following equation is satisfied:

$$P_{\mathrm{env}}(i) = 0. \tag{19}$$

The energy balance between the device and the operator can be expressed as

$$P_{\mathrm{op}}(i) = \boldsymbol{w}_{\mathrm{feedback}}^\top(i+1)\boldsymbol{v}_{\mathrm{hand}}(i+1) - \boldsymbol{w}_{\mathrm{hand}}^\top(i)\boldsymbol{v}_{\mathrm{hand}}(i), \tag{20}$$

where XXX.
Here, we define $\boldsymbol{w}_{\mathrm{cand}}$ as the scaled wrench measured from the robot's end effector.

$$\boldsymbol{w}_{\mathrm{cand}}(i+1) = \boldsymbol{k}_{\mathrm{scale}} \odot \boldsymbol{w}_{\mathrm{robot,measured}}(i) \tag{21}$$

Assuming this wrench is directly fed back to the operator, the response twist of the operator's hand can be predicted as follows:

$$\dot{x}(i+1) \approx \dot{x}(i) + \ddot{x}(i)\Delta t = \dot{x}(i) + \frac{\Delta t}{M_i}(w_{\mathrm{cand},j}(i) - B_i\dot{x}(i) - K_i x(i)) \tag{22}$$

Additionally, the wrench applied by the operator to the device can be estimated from the operator's hand position, velocity, and acceleration as follows:

$$F_{\mathrm{hand}}(i) = M_i\ddot{x}(i) + B_i\dot{x}(i) + K_i x(i) \tag{23}$$

Therefore, the system's energy E_{tank} is updated as follows:

$$E_{\mathrm{tank}}(i+1) = E_{\mathrm{tank}}(i) - \Delta E_{\mathrm{pred}} \tag{24}$$

$$\begin{aligned} \Delta E_{\mathrm{pred}} &= P_{\mathrm{op}}(i)\Delta t \\ &= \{\boldsymbol{w}_{\mathrm{cand}}^\top(i+1)\boldsymbol{v}_{\mathrm{hand}}(i+1) - \boldsymbol{w}_{\mathrm{hand}}^\top(i)\boldsymbol{v}_{\mathrm{hand}}(i)\}\Delta t \\ &= \{\boldsymbol{w}_{\mathrm{cand}}^\top(i+1)\boldsymbol{v}_{\mathrm{hand}}(i+1) - P_{\mathrm{in}}\}\Delta t \end{aligned} \tag{25}$$

Let the upper limit of the energy tank be $E_{\mathrm{tank}}^{\max}$ and the lower limit be 0. When $0 < E_{\mathrm{tank}}(i+1) < E_{\mathrm{tank}}^{\max}$, the system's passivity is guaranteed, so no intervention is necessary. Thus, the feedback wrench becomes:

$$\boldsymbol{w}_{\mathrm{feedback}} = \boldsymbol{w}_{\mathrm{cand}} \tag{26}$$

3.2.3 Modification of the feedback wrench during energy shortage

When $E_{\text{tank}}(i+1) < 0$, the system spontaneously generates new energy, and the passivity of the system is violated. To maintain passivity by reducing the energy outflow from the system, the feedback wrench is scaled. At this time, to minimize the loss of control transparency as much as possible, $\boldsymbol{w}_{\text{feedback}}$ closest to $\boldsymbol{w}_{\text{cand}}$ is determined under the condition that the tank's energy does not become negative. This can be expressed as the following optimization problem.

$$\min_{\boldsymbol{w}_{\text{feedback}}} \quad \frac{1}{2}\left\|\boldsymbol{w}_{\text{feedback}} - \boldsymbol{w}_{\text{cand}}\right\|^2 \tag{27}$$

$$\text{s.t.} \quad E_{\text{tank}}(i) - \left(\boldsymbol{w}_{\text{feedback}}^{\top}\boldsymbol{v}_{\text{hand}} - P_{\text{in}}\right)\Delta t \geq 0 \tag{28}$$

where XXX. This is formulated as a convex quadratic programming problem. Introducing the Lagrange multiplier $\lambda \geq 0$ yields the Lagrange function:

$$\mathcal{L} = \frac{1}{2}\|\boldsymbol{w}_{\text{feedback}} - \boldsymbol{w}_{\text{cand}}\|^2 + \lambda\left[-E_{\text{tank}}(i) + \Delta t\left(\boldsymbol{w}_{\text{feedback}}^{\top}\boldsymbol{v}_{\text{hand}} - P_{\text{in}}\right)\right] \tag{29}$$

and the optimal solution is:

$$\boldsymbol{w}_{\text{feedback}} = \boldsymbol{w}_{\text{cand}} - \lambda^{*}\Delta t\,\boldsymbol{v}_{\text{hand}} \tag{30}$$

Here, λ^* is the value where equality holds in Equation XXX, and from the KKT conditions, we obtain:

$$\lambda^{*} = \max\left(0,\ \frac{\boldsymbol{v}_{\text{hand}}^{\top}\boldsymbol{w}_{\text{cand}} - \left(\frac{E_{\text{tank}}(i)}{\Delta t} + P_{\text{in}}\right)}{\boldsymbol{v}_{\text{hand}}^{\top}\boldsymbol{v}_{\text{hand}}}\right). \tag{31}$$

And the feedback wrench becomes;

$$\boldsymbol{w}_{\text{feedback}} = \boldsymbol{w}_{\text{cand}} - \lambda^{*}\boldsymbol{v}_{\text{hand}}. \tag{32}$$

3.2.4 Modification of the feedback wrench during energy overflow

When $E_{\text{tank}}(i+1) > E_{\text{tank}}^{\max}$, the energy exceeds the system's tolerance, and the passivity of the system is violated. To maintain the passivity of the system by diffusing the system's energy, damping is applied to the feedback wrench. The feedback wrench with damping applied can be expressed as

$$\boldsymbol{w}_{\text{feedback}}(i+1) = \boldsymbol{w}_{\text{cand}}(i+1) + D_{\text{add}}\boldsymbol{v}_{\text{hand}}(i+1) \tag{33}$$

and the energy outflow from the system can be rewritten as follows.

$$\begin{aligned}\frac{\Delta E_{\text{pred}}}{\Delta t} &= \left\{\left(\boldsymbol{w}_{\text{cand}}(i+1) + D_{\text{add}}\boldsymbol{v}_{\text{hand}}(i+1)\right)^{\top}\boldsymbol{v}_{\text{hand}}(i+1) - P_{\text{in}}\right\} \\ &= \boldsymbol{w}_{\text{cand}}^{\top}(i+1)\boldsymbol{v}_{\text{hand}}(i+1) + \boldsymbol{v}_{\text{hand}}^{\top}(i+1)D_{\text{add}}\boldsymbol{v}_{\text{hand}}(i+1) - P_{\text{in}}\end{aligned} \tag{34}$$

To minimize degradation of control transparency, damping is applied per axis. $D_{\text{add}} = \text{diag}(d_1, \ldots, d_6)(d_j > 0)$ needs to satisfy the following equation when allowing energy storage up to the upper limit:

$$\boldsymbol{v}_{\text{hand}}^{\top}(i+1)D_{\text{add}}\boldsymbol{v}_{\text{hand}}(i+1) = \frac{E_{\text{tank}}(i) - E_{\text{tank}}^{\max}}{\Delta t} - \boldsymbol{w}_{\text{cand}}^{\top}(i+1)\boldsymbol{v}_{\text{hand}}(i+1) + P_{\text{in}} := P_{\text{req}} \tag{35}$$

Divide into translationalblock ($j = 1, 2, 3$) and rotational block ($j = 4, 5, 6$), and determine the damping factor weights based on each axis's contribution to power.

$$P_{\text{req,trans}} = P_{\text{req}} \cdot \frac{\sum_{j=1}^{3}\max(0, p_j)}{\sum_{j=1}^{6}\max(0, p_j)} \tag{36}$$

$$P_{\text{req,rot}} = P_{\text{req}} - P_{\text{req,trans}} \tag{37}$$

$$\hat{q}_j = \frac{p_j}{\sum_{k \in \text{block}} p_k} \tag{38}$$

However, when $\sum_{k \in \text{block}} p_k \approx 0$, $\hat{q}_j$ is undefined, use a predetermined fixed damping factor value.

$$d_j = d_{\text{const}} \tag{39}$$

Based on these weights, let the damping factor write as:

$$d_j = \kappa \frac{\hat{q}_j}{v_j^2 + \epsilon}, \tag{40}$$

where ϵ is a term to prevent the damping factor from becoming excessively large at low velocities.

$$P_{\text{req,block}} = \sum_{j \in \text{block}} d_j v_j^2 = \kappa \sum_{j \in \text{block}} \hat{q}_j \frac{v_j^2}{v_j^2 + \epsilon} \tag{41}$$

$$\kappa = \frac{P_{\text{req,block}}}{\sum_{j \in \text{block}} \hat{q}_j \frac{v_j^2}{v_j^2 + \epsilon}} \tag{42}$$

$$d_j = \frac{P_{\text{req,block}}}{\sum_{j \in \text{block}} \hat{q}_j \frac{v_j^2}{v_j^2 + \epsilon}} \cdot \frac{\hat{q}_j}{v_j^2 + \epsilon} \tag{43}$$

And the feedback wrench becomes;

$$\boldsymbol{w}_{\text{feedback}}(i+1) = \boldsymbol{w}_{\text{cand}}(i+1) + D_{\text{add}} \boldsymbol{v}_{\text{hand}}(i+1), \quad D_{\text{add}} = \text{diag}(d_1, \ldots, d_6) \tag{44}$$

4 Experimental Section

First part of experimental section:

Second part of experimental section:

Supporting Information
Supporting Information is available from the Wiley Online Library or from the author.

Acknowledgements
Please insert your acknowledgements here

References

References

[1] Moju Zhao, Tomoki Anzai, Fan Shi, Xiangyu Chen, Kei Okada, and Masayuki Inaba. Design, modeling, and control of an aerial robot dragon: A dual-rotor-embedded multilink robot with the ability of multi-degree-of-freedom aerial transformation. *IEEE Robotics and Automation Letters*, 3(2):1176–1183, 2018.