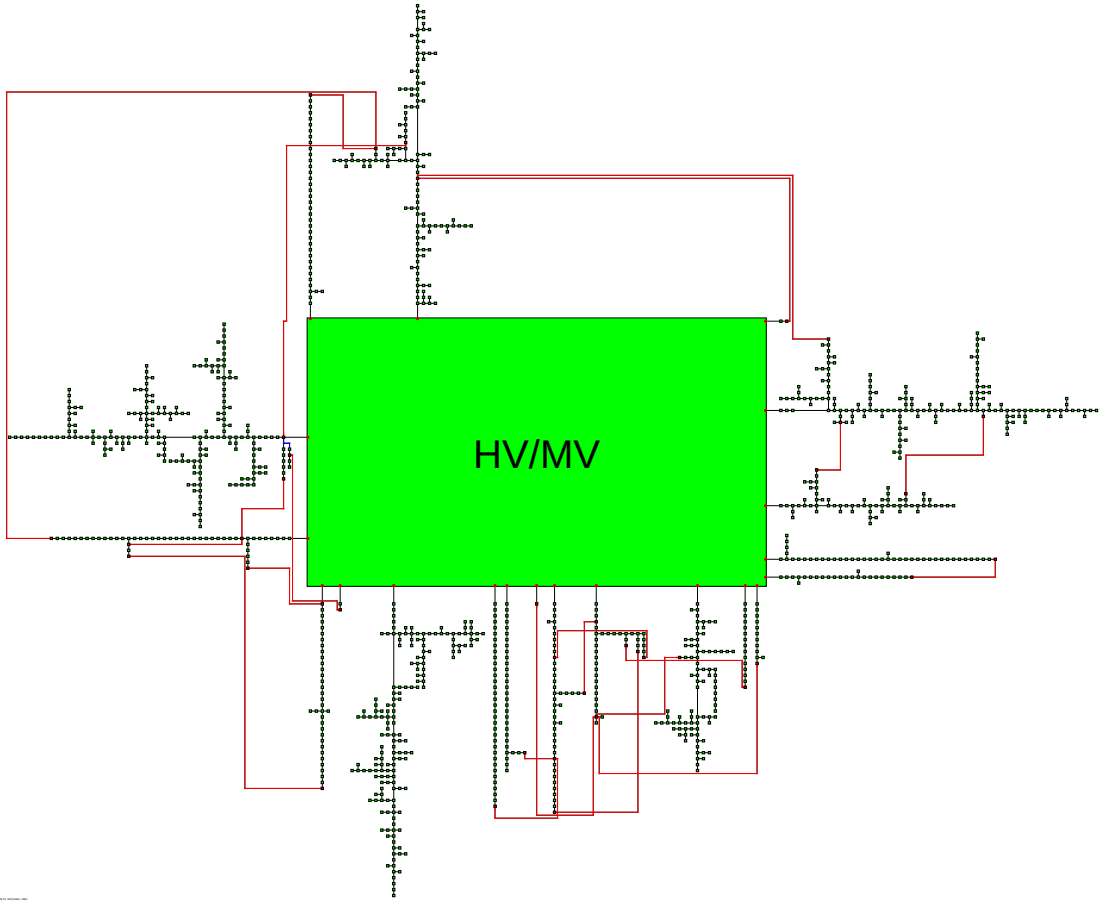

Time: 0.0000 (0) - 0.0012 (0.0012) - 0.0012