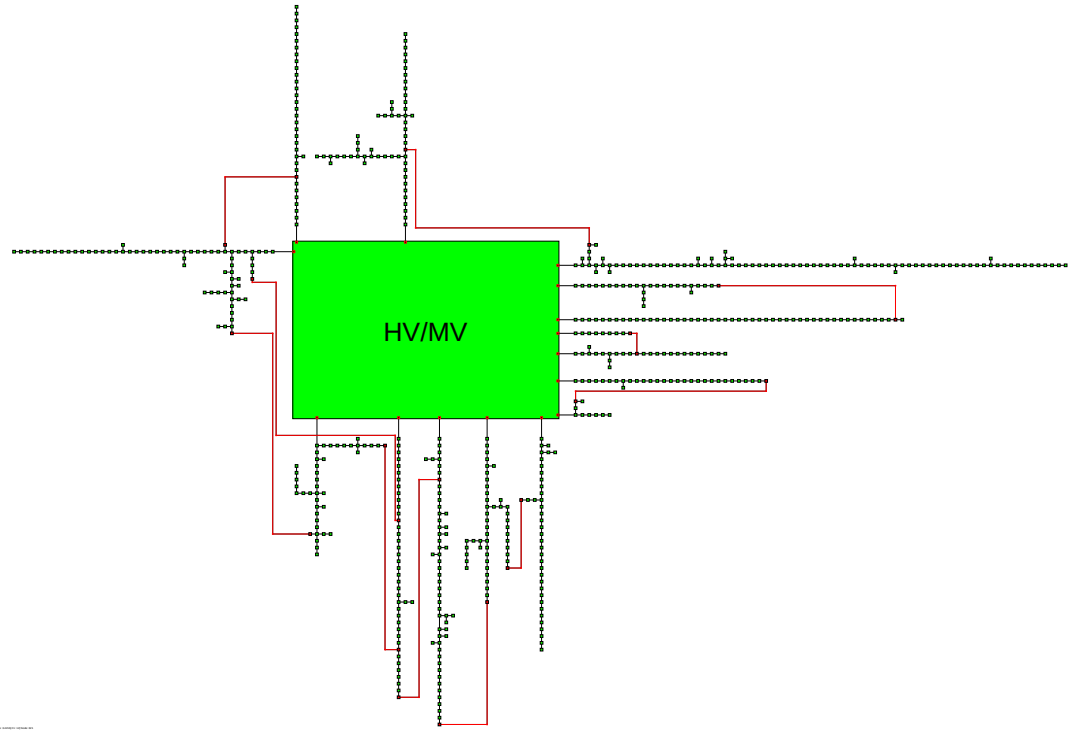

Note: SUBSTATION HV/MV