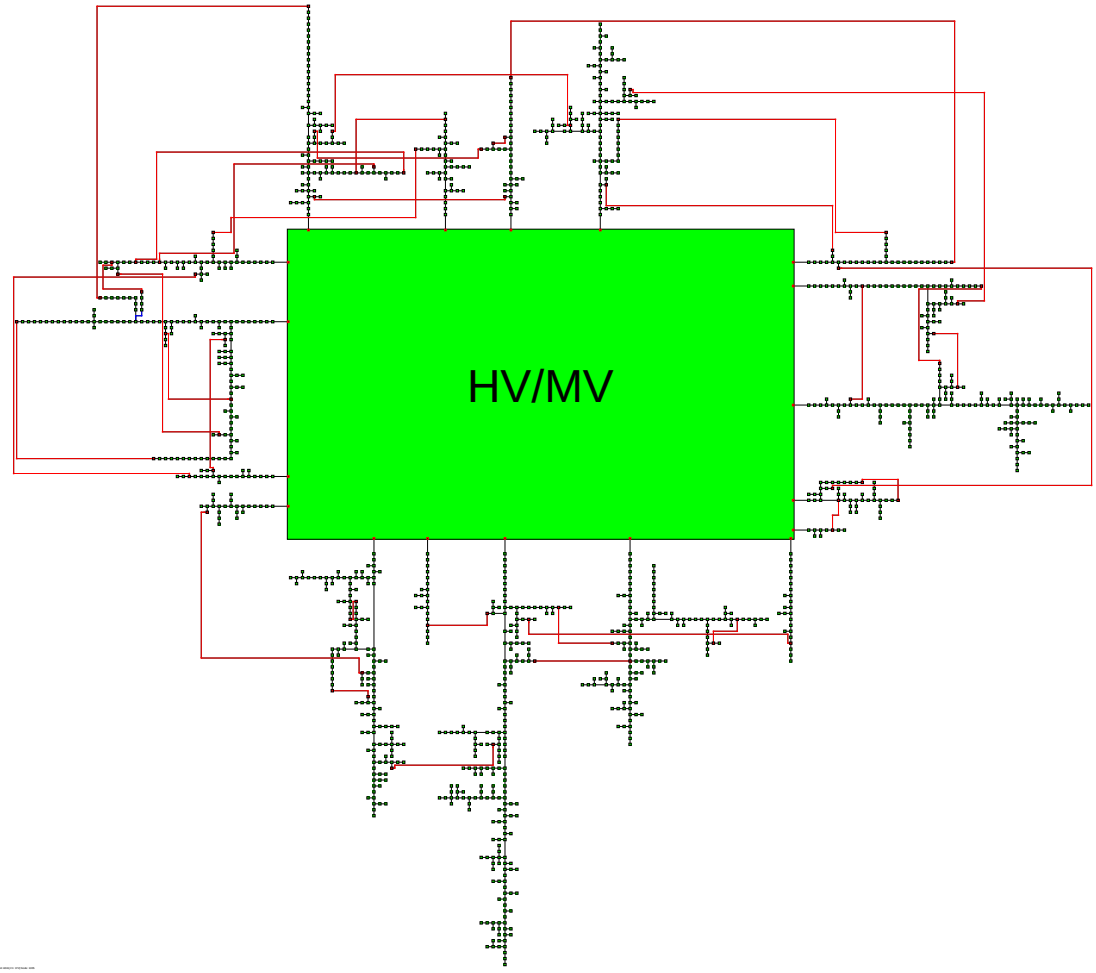

Time: 10:49:00 (+1) - 07/07/2020 - 10:00