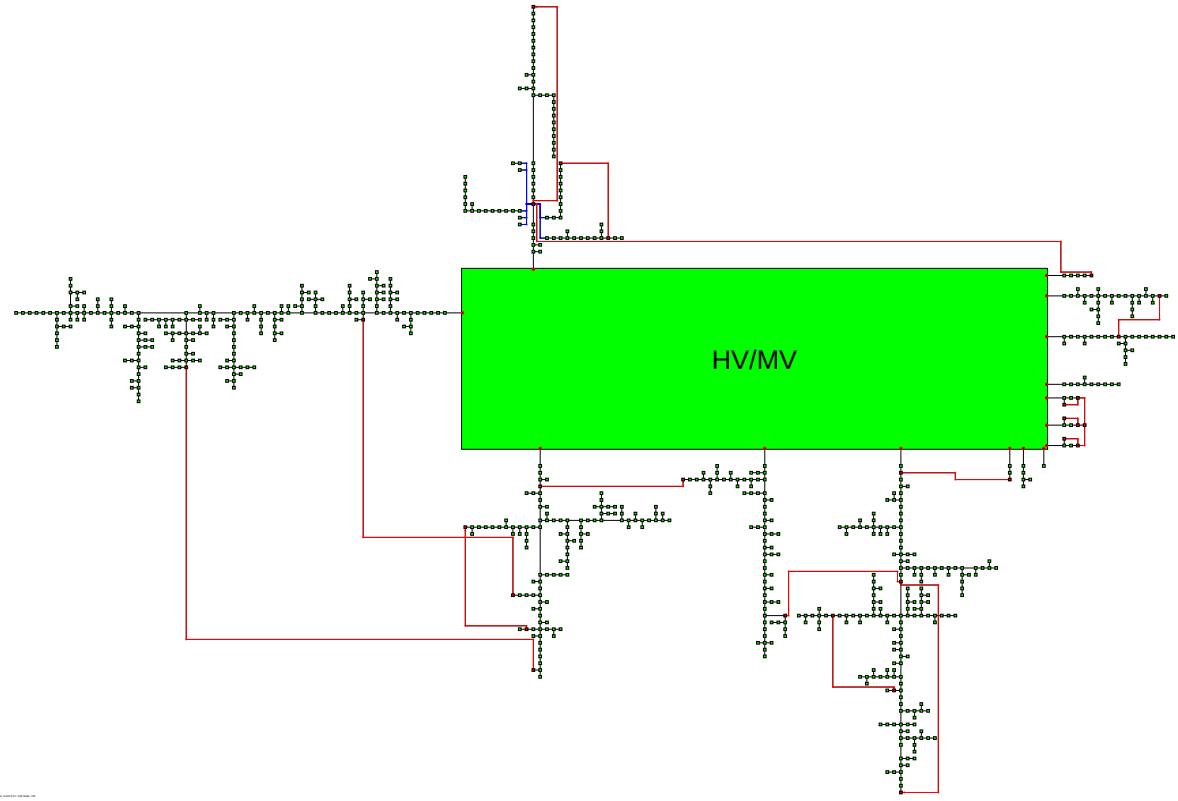

Source: Scandinavian Leader Newsletter, 1996.