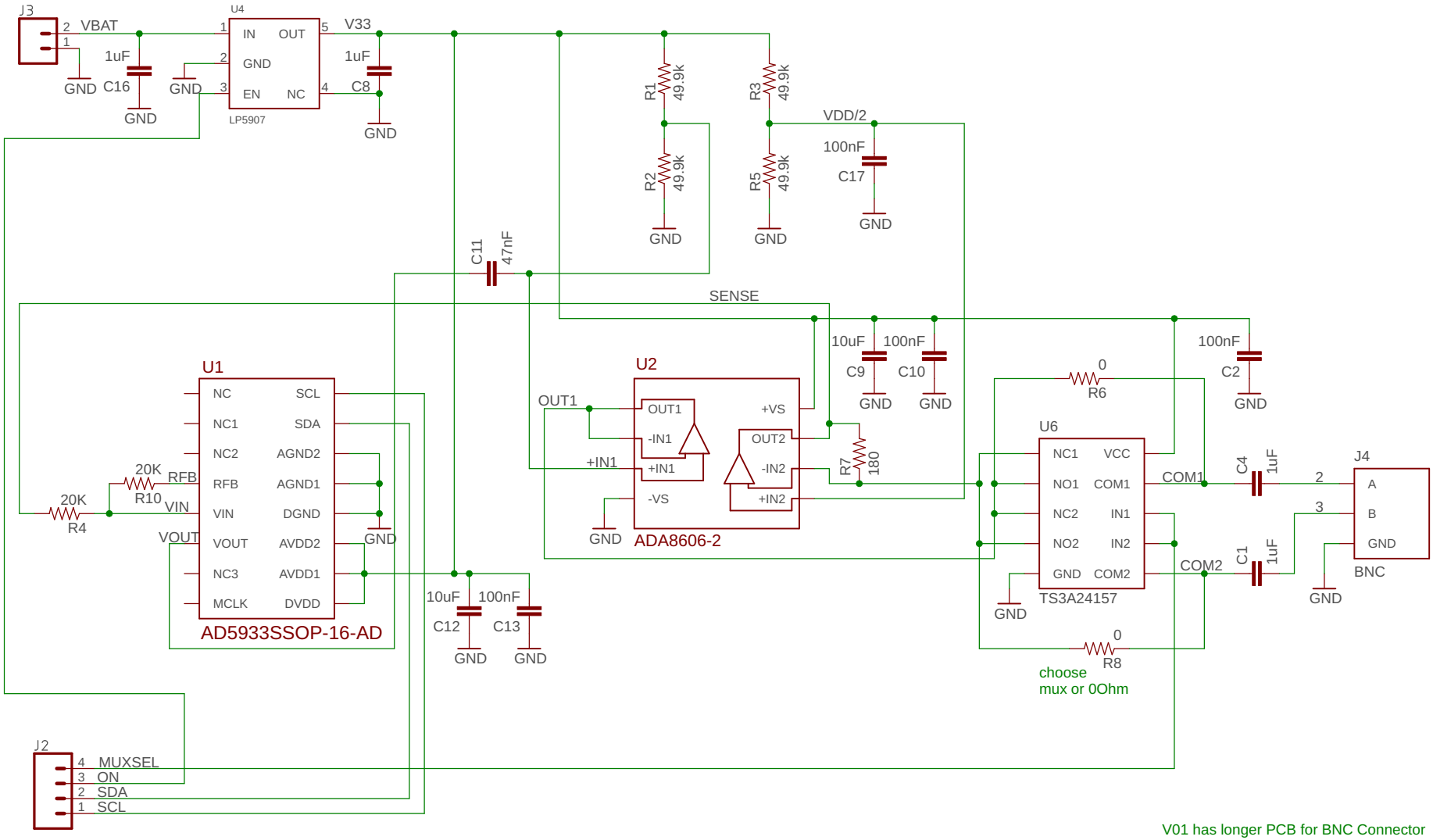

V01 has longer PCB for BNC Connector

Released under the Creative Commons
Attribution Share-Alike 4.0 License
https://creativecommons.org/licenses/by-sa/4.0/

TITLE: ConduinoBNC-V03V01

This is Conduino V03
with a BNC

Design by:
Kevin D'Angelo

REV:

Date: 7/23/2018 10:19 AM

Sheet: 1/1