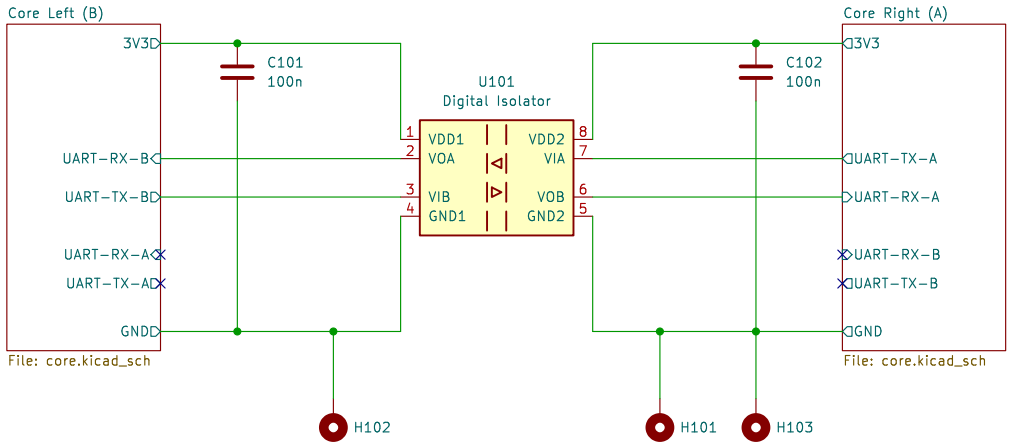

License: GPL-3.0-only
Hrvoje Čavrak and Kevin P. Fleming

Sheet: /
File: DeskHop-C-JLCPCB.kicad_sch

Title: DeskHop-C - Fast K/M Switching Device (JLCPCB build)

Size: A4	Date: 2024-03-17	**Rev: v1-jlcpcb**
KiCad E.D.A. kicad 7.0.11+1		Id: 1/3

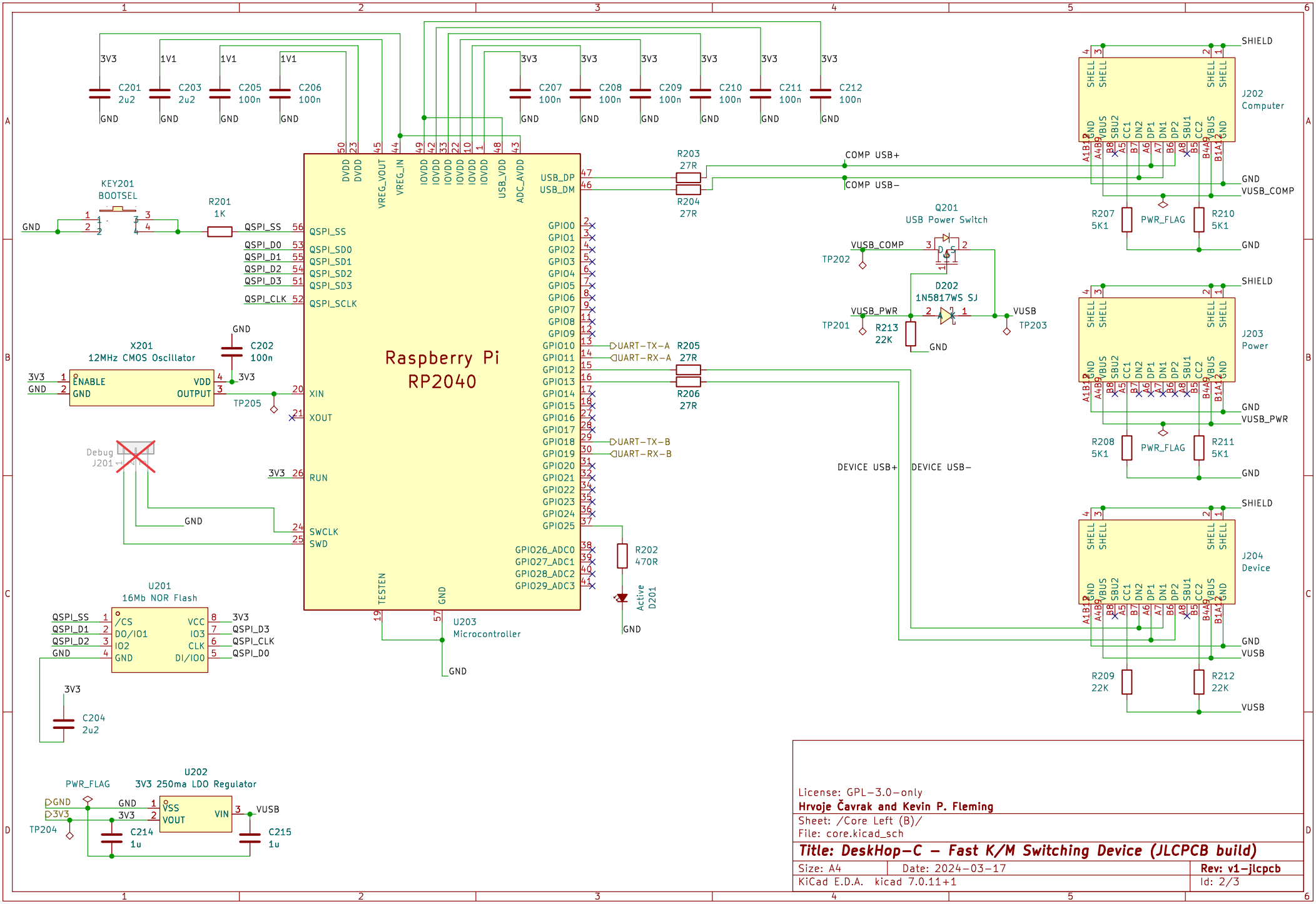

License: GPL-3.0-only

Hrvoje Čavrak and Kevin P. Fleming

Sheet: /Core Left (B)/

File: core.kicad_sch

Title: DeskHop-C – Fast K/M Switching Device (JLCPCB build)

Size: A4	Date: 2024-03-17	**Rev: v1-jlcpcb**
KiCad E.D.A. kicad 7.0.11+1		Id: 2/3

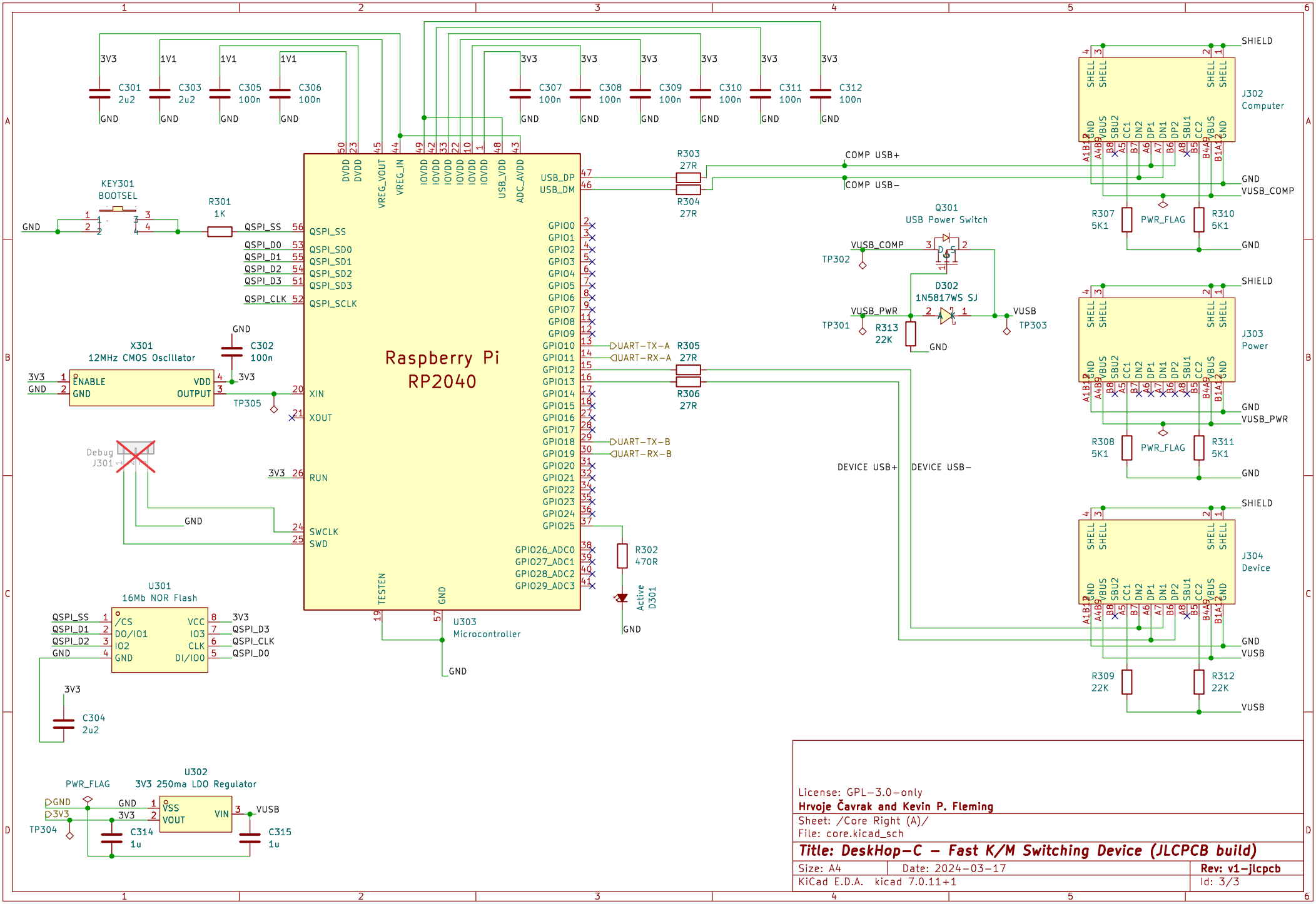

License: GPL−3.0−only

Hrvoje Čavrak and Kevin P. Fleming

Sheet: /Core Right (A)/

File: core.kicad_sch

Title: DeskHop−C − Fast K/M Switching Device (JLCPCB build)

Size: A4	Date: 2024−03−17	**Rev: v1−jlcpcb**
KiCad E.D.A. kicad 7.0.11+1		Id: 3/3