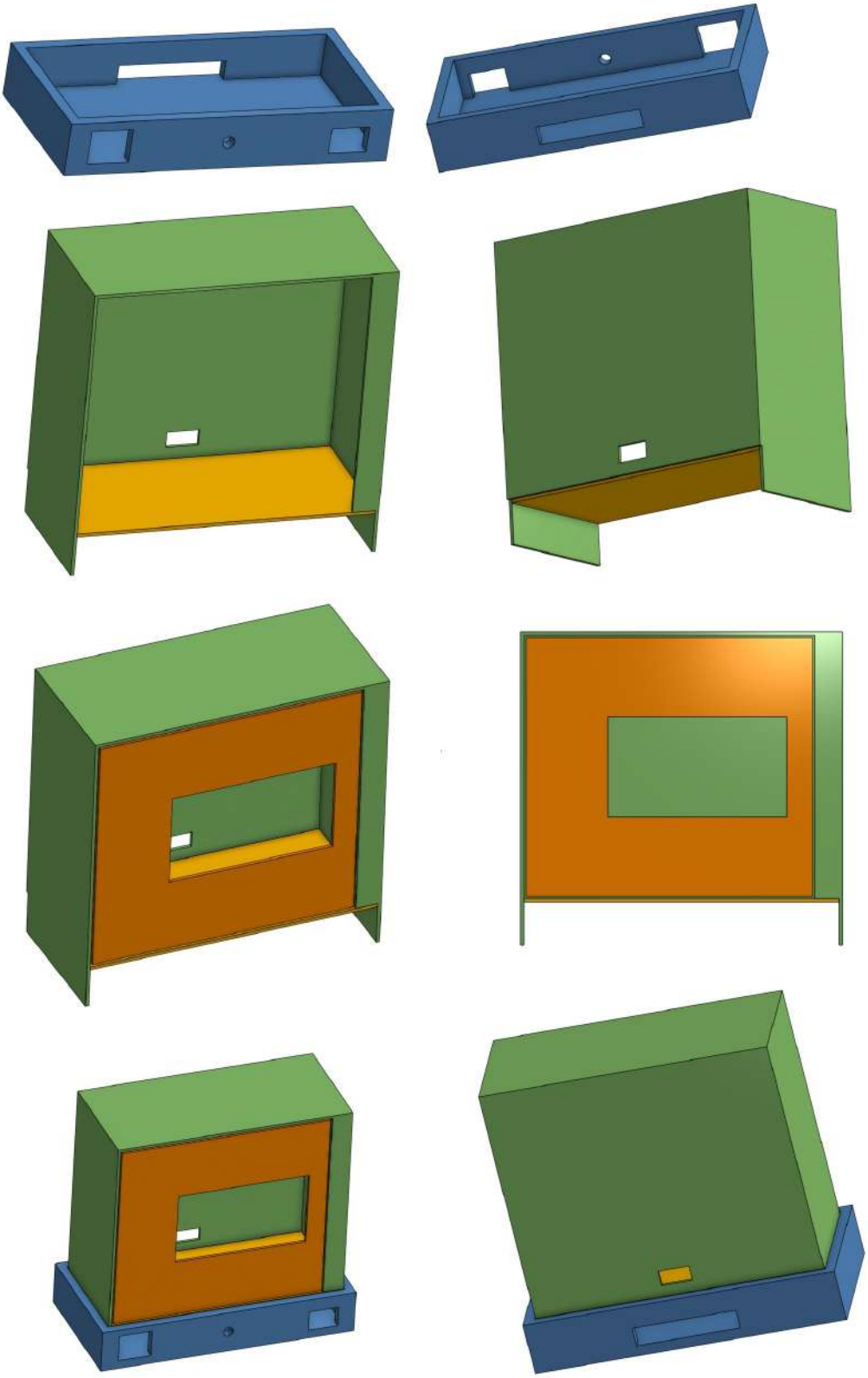

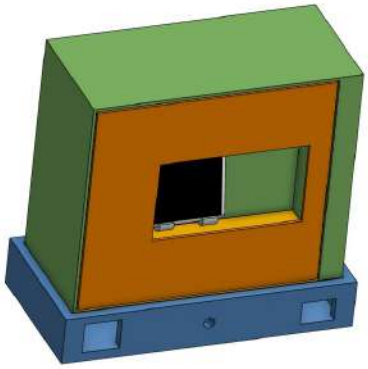

안에 스마트폰을 거치하고 충전할 수 있습니다.

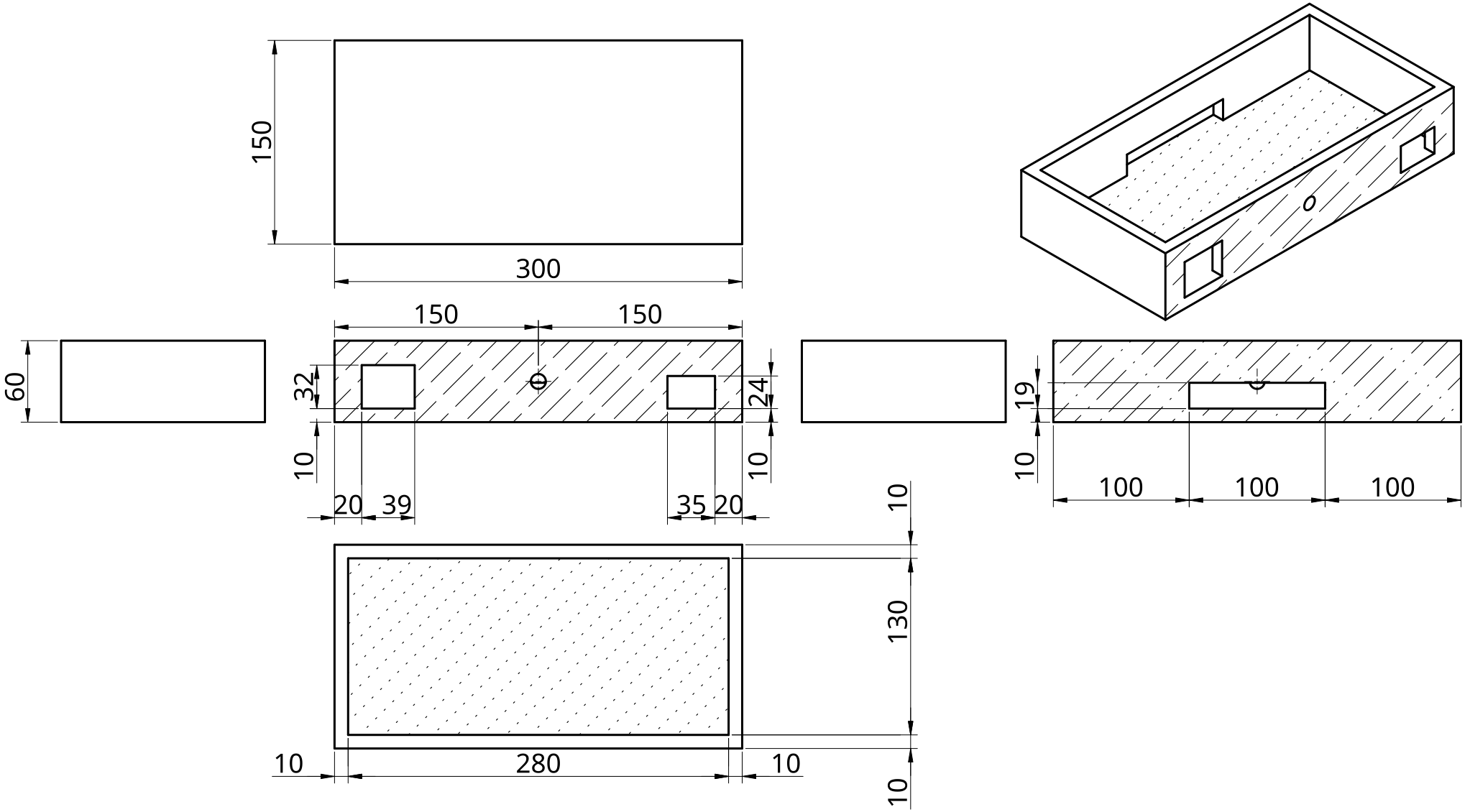

UNLESS OTHERWISE SPECIFIED, DIMENSIONS ARE IN MILLIMETERS ANGULAR = ± ° SURFACE FINISH √		NAME	SIGNATURE	DATE
	DRAWN	SH C		2025-07-27
	CHECKED			
	APPROVED			
DO NOT SCALE DRAWING				
BREAK ALL SHARP EDGES AND REMOVE BURRS				
FIRST ANGLE PROJECTION	MATERIAL		FINISH	

TITLE

SIZE A4	DWG NO.	REV.
SCALE 1:4	WEIGHT	SHEET 1 of 1

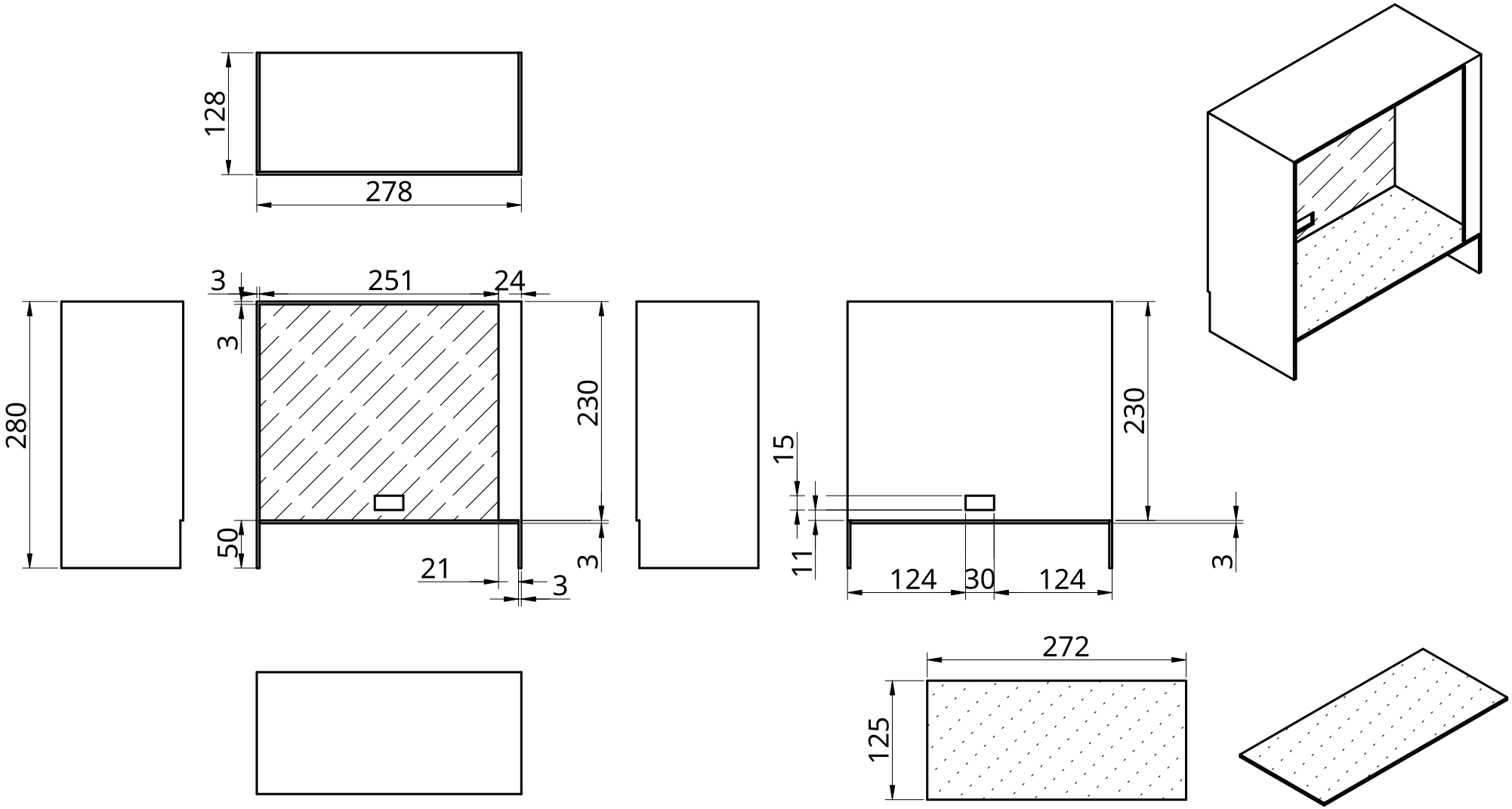

UNLESS OTHERWISE SPECIFIED, DIMENSIONS ARE IN MILLIMETERS		NAME	SIGNATURE	DATE
ANGULAR = ± °	DRAWN	SH C		2025-07-25
SURFACE FINISH √	CHECKED			
	APPROVED			
DO NOT SCALE DRAWING				
BREAK ALL SHARP EDGES AND REMOVE BURRS				
FIRST ANGLE PROJECTION	MATERIAL		FINISH	

TITLE

SIZE A4	DWG NO.	REV.
SCALE 1:6	WEIGHT	SHEET 1 of 1

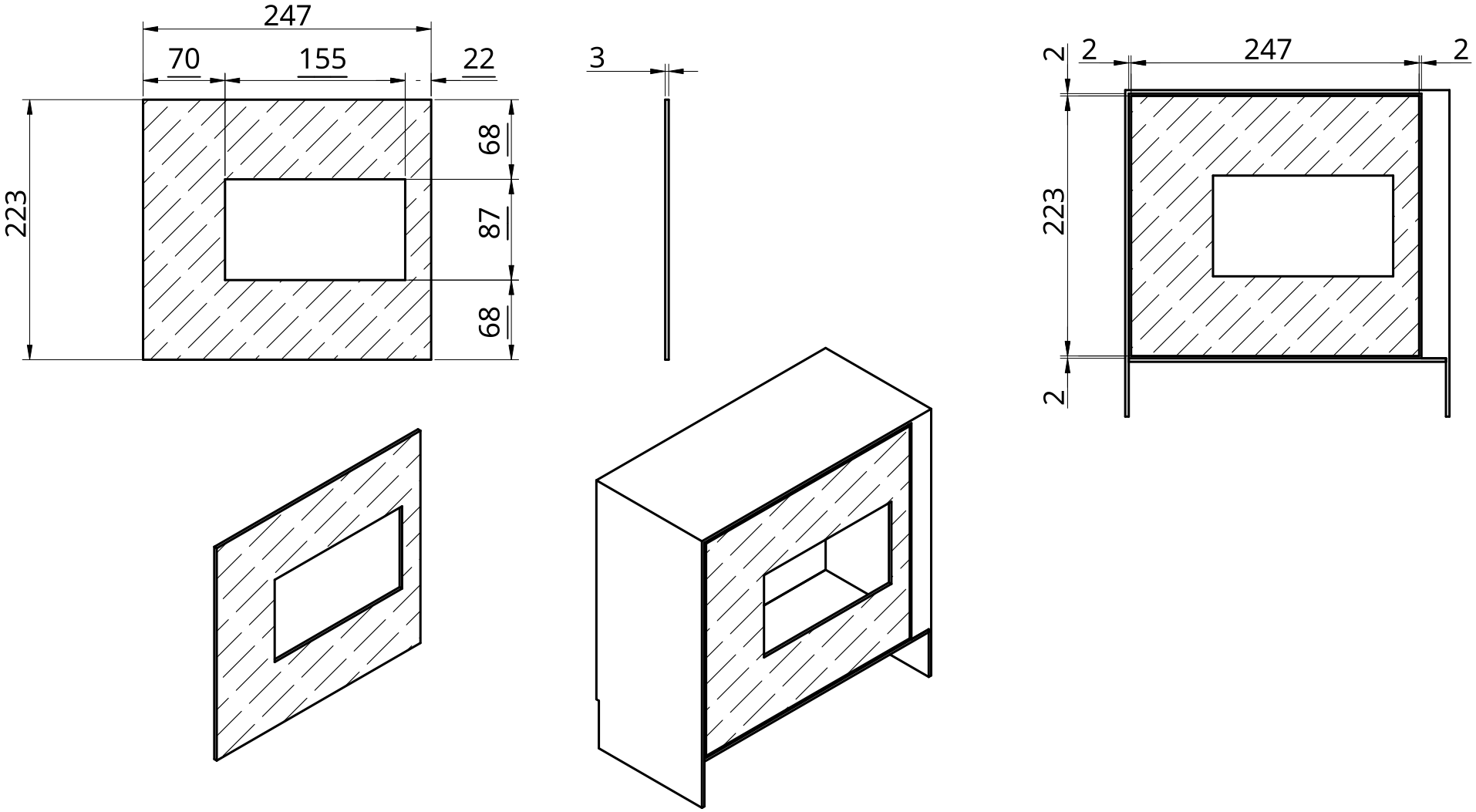

UNLESS OTHERWISE SPECIFIED, DIMENSIONS ARE IN MILLIMETERS ANGULAR = ± ° SURFACE FINISH √		NAME	SIGNATURE	DATE
	DRAWN	SH C		2025-07-27
	CHECKED			
	APPROVED			
DO NOT SCALE DRAWING				
BREAK ALL SHARP EDGES AND REMOVE BURRS				
FIRST ANGLE PROJECTION	MATERIAL		FINISH	

TITLE

SIZE A4	DWG NO.	REV.
SCALE 1:5	WEIGHT	SHEET 1 of 1

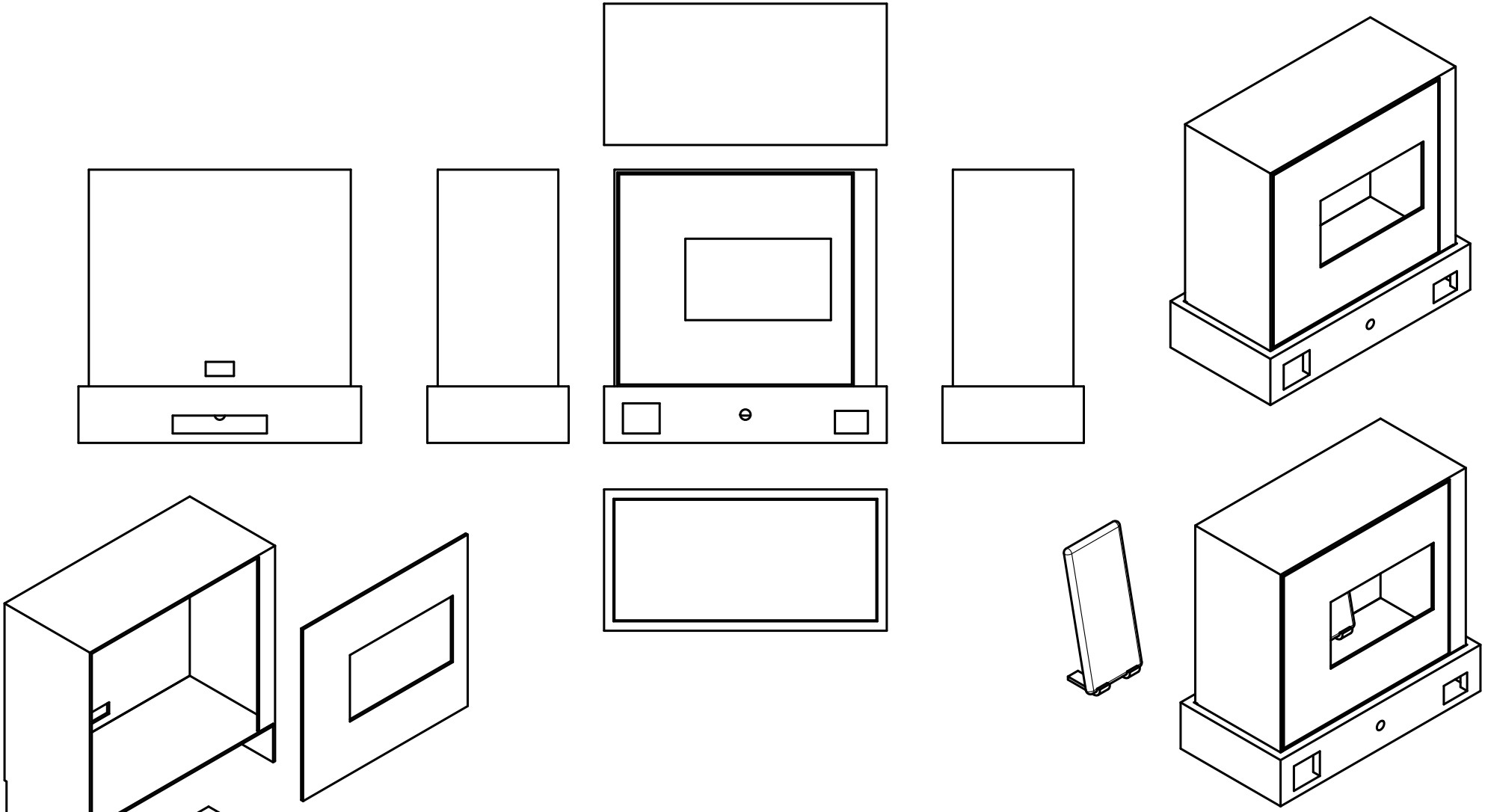

UNLESS OTHERWISE SPECIFIED, DIMENSIONS ARE IN MILLIMETERS ANGULAR = ± ° SURFACE FINISH		NAME	SIGNATURE	DATE
	DRAWN	SH C		2025-07-27
	CHECKED			
	APPROVED			
DO NOT SCALE DRAWING				
BREAK ALL SHARP EDGES AND REMOVE BURRS				
FIRST ANGLE PROJECTION	MATERIAL		FINISH	

TITLE

SIZE A4	DWG NO.	REV.
SCALE 1:6	WEIGHT	SHEET 1 of 1