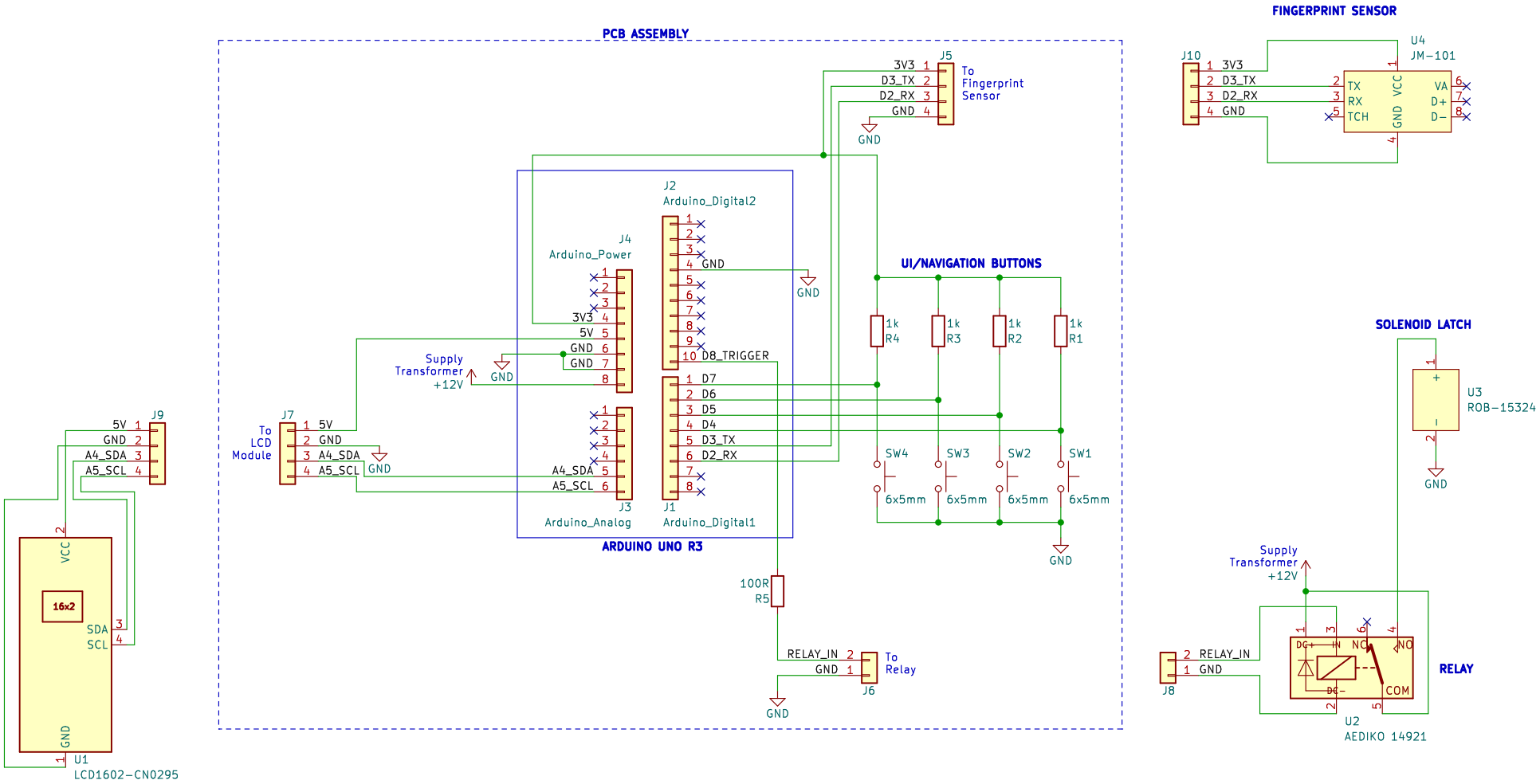

Sheet: /
File: FingerPrint_Lock_PCB.kicad_sch

Title: Fingerprint Lock

Size: A4	Date:	Rev:
KiCad E.D.A. kicad (6.0.8)		Id: 1/1