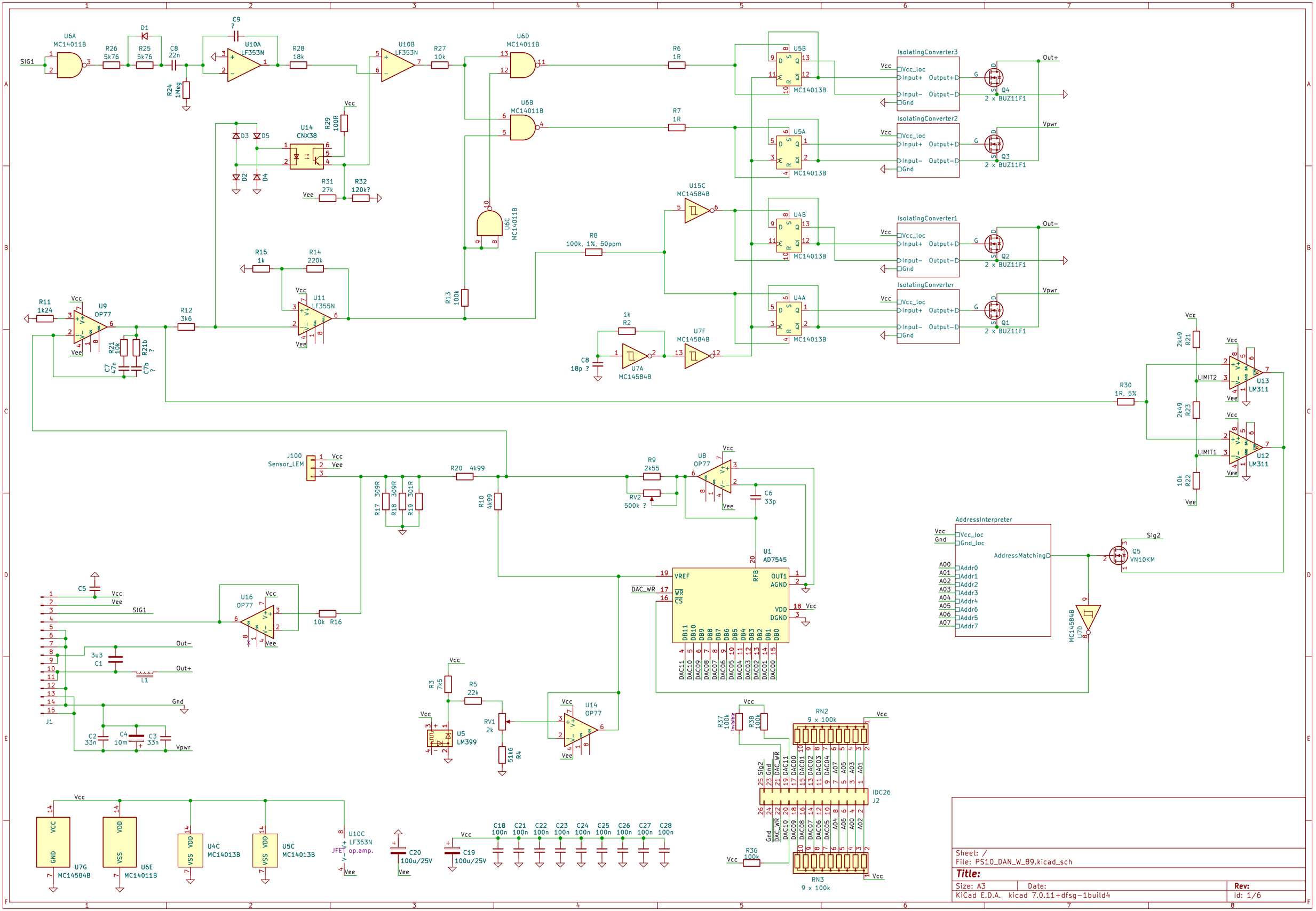
U6A MC14011B
SIG1
R26 5k76
R25 5k76
D1
C8 22n
R24 1Meg
C9 ?
U10A LF353N
R28 18k
U10B LF353N
R27 10k
U6D MC14011B
U6B MC14011B
U6C MC14011B
R6 1R
R7 1R
U5B MC14013B
U5A MC14013B
U4B MC14013B
U4A MC14013B
IsolatingConverter3
IsolatingConverter2
IsolatingConverter1
IsolatingConverter
Vcc_loc
Input+
Input−
Gnd
Output+
Output−
Q4 2 x BUZ11F1
Q3 2 x BUZ11F1
Q2 2 x BUZ11F1
Q1 2 x BUZ11F1
Out+
Out−
Vpwr
U14 CNX38
R29 100R
D3
D5
D2
D4
R31 27k
R32 120k?
Vee
U15C MC14584B
R8 100k, 1%, 50ppm
R15 1k
R14 220k
U11 LF355N
R13 100k
R11 1k24
U9 OP77
R12 3k6
R21 10k
R21b ?
C7 47n
C7b ?
R2 1k
C8 18p ?
U7A MC14584B
U7F MC14584B
R30 1R, 5%
2k49 R21
2k49 R23
10k R22
U13 LM311
U12 LM311
LIMIT2
LIMIT1
J100 Sensor_LEM
R17 309R
R18 309R
R19 301R
R20 4k99
R10 4k99
R9 2k55
RV2 500k ?
U8 OP77
C6 33p
U1 AD7545
VREF
RFB
OUT1
AGND
VDD
DGND
WR
CS
DAC_WR
DB11 DB10 DB9 DB8 DB7 DB6 DB5 DB4 DB3 DB2 DB1 DB0
DAC11 DAC10 DAC09 DAC08 DAC07 DAC06 DAC05 DAC04 DAC03 DAC02 DAC01 DAC00
AddressInterpreter
Vcc_loc
Gnd_loc
AddressMatching
A00 A01 A02 A03 A04 A05 A06 A07
Addr0 Addr1 Addr2 Addr3 Addr4 Addr5 Addr6 Addr7
Sig2
Q5 VN10KM
U7D MC14584B
C5
U16 OP77
10k R16
3u3 C1
L1
J1
C2 33n
C4 10m
C3 33n
R3 7k5
R5 22k
U5 LM399
RV1 2k
51k6 R4
U14 OP77
R37 100k
R38 100k
RN2 9 x 100k
IDC26 J2
R36 100k
RN3 9 x 100k
U7G MC14584B
U6E MC14011B
U4C MC14013B
U5C MC14013B
U10C LF353N op.amp.
JFET
C20 100u/25V
C19 100u/25V
C18 100n
C21 100n
C22 100n
C23 100n
C24 100n
C25 100n
C26 100n
C27 100n
C28 100n
Sheet: /
File: PS10_DAN_W_89.kicad_sch
Title:
Size: A3
Date:
Rev:
KiCad E.D.A. kicad 7.0.11+dfsg-1build4
Id: 1/6