MODERN PRECIOUS METALS®

Product Specifications Guide

LITERISE®

SIMPLELIFT™

SIMPLELIFT POWERVIEW® GEN 3

HunterDouglas

Contents

MODERN PRECIOUS METALS® ALUMINUM BLINDS

Reference Guide Revision & Discontinuation History MPM-4
Introduction MPM-5
Product Summary MPM-6
- SimpleLift™ System Bottom Rail Colors MPM-6
- Bottom Rail Color Coordination MPM-7
- Price Chart Guide MPM-8

LiteRise® – 1" Decor® MPM-9
- Size Standards MPM-9
- Operating System Specifications MPM-10
- Ordering Notes MPM-11
- Product View MPM-12

LiteRise® – 2" Macro MPM-13
- Size Standards MPM-13
- Operating System Specifications MPM-14
- Ordering Notes MPM-15
- Product View MPM-16

SimpleLift™ – 1" Celebrity® and ½" & 1" Décor® MPM-17
- Size Standards MPM-17
- Operating System Specifications MPM-18
- Ordering Notes MPM-19
- Product Views MPM-20

SimpleLift™ – 2" Macro MPM-21
- Size Standards MPM-21
- Operating System Specifications MPM-22
- Ordering Notes MPM-23
- Product View MPM-24

SimpleLift with PowerView Gen 3 Automation Tilt-Only MPM-25
- Size Standards – 2" Macro MPM-25
- Operating System Specifications MPM-26
- Ordering Notes MPM-27
- PowerView® Gen 3 Power Supplies MPM-28
- PowerView® Gen 3 Accessories MPM-28
- Product View MPM-30

Cut-Outs MPM-31
- Size Standards MPM-31
- Design Option Specifications MPM-32

Valances MPM-33
- Valances Explained MPM-34

Contents

MODERN PRECIOUS METALS® ALUMINUM BLINDS

Additional Specifications MPM-35
Bottom Rails MPM-35
Brackets MPM-35
Ladders MPM-36
Wands MPM-36
Stacking Heights MPM-36

Reference Guide Revision & Discontinuation History

MODERN PRECIOUS METALS® ALUMINUM BLINDS

Document Use

This document provides detailed product specifications only. Pricing information is now published separately in the Hunter Douglas Price Guide. *(This guide was formerly known as the Reference Guide, which previously included both specifications and pricing.)*

Revision History

This section provides an overview of Reference Guide revision updates. Revisions listed in this section reset each Spring launch.

Date	Revision Description	Affected Pages
04 MAR 2026	C-size Battery Wand was discontinued.	Various
04 MAR 2026	New 6" extension cable was added.	Various
20 JAN 2026	Pricing information moved to the Hunter Douglas US Price Guide.	Various

Fabric Discontinuation History

This section provides an overview of discontinued fabrics. Discontinued items listed reset each Spring launch.

Date	Fabric	Affected Pages

Color Discontinuation History

This section provides an overview of discontinued colors. Discontinued items listed reset each Spring launch.

Date	Color	Affected Pages

Introduction

MODERN PRECIOUS METALS® ALUMINUM BLINDS

Modern Precious Metals® Aluminum Blinds have unsurpassed durability with style to match. Slats are available in an extensive array of colors, textures, and finishes.

1" Celebrity®

This budget-conscious blind features .006 gauge slats and a stylish, beveled headrail.

½" and 1" Décor®

Our premium .008 gauge slats come standard with traditional routes and a contoured headrail.

2" Macro

Comes standard with a sleek coordinating Macro valance.

Operating Systems

Choose from three systems:

- The LiteRise® cordless system operates by lifting or lowering the bottom rail with the touch of a finger.
- SimpleLift™ features components inside a color-coordinated aluminum bottom rail that raise and lower the blind with a push-button feature.
- SimpleLift™ with PowerView® Gen 3 Automation Tilt-Only combines the ease of the SimpleLift system with PowerView Gen 3 Automation for a completely convenient operating experience.

Certifications

- Modern Precious Metals Aluminum Blinds have achieved GREENGUARD GOLD Certification.

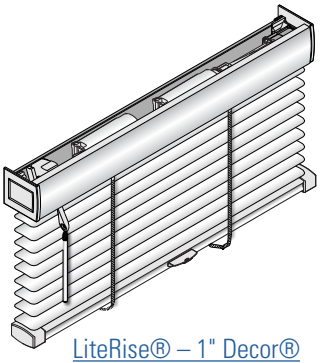

LiteRise® – 1" Decor®

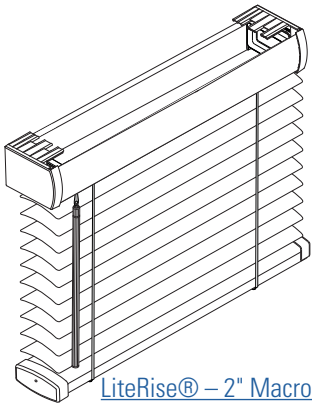

LiteRise® – 2" Macro

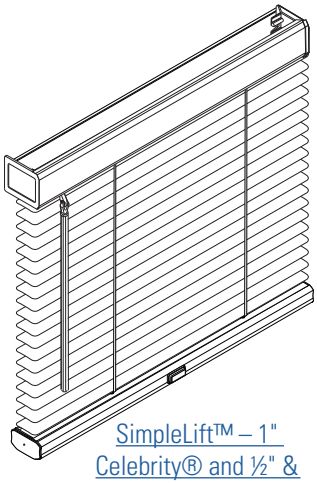

SimpleLift™ – 1" Celebrity® and ½" & 1" Décor®

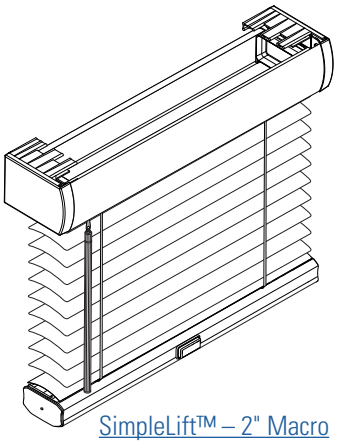

SimpleLift™ – 2" Macro

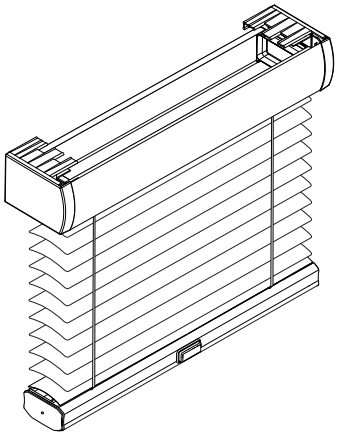

SimpleLift™ with PowerView Gen 3 Automation Tilt-Only — 2" Macro

SimpleLift™ System Bottom Rail Colors

- Modern Precious Metals® Aluminum Blinds with SimpleLift™ and SimpleLift with PowerView® Gen 3 Automation come standard with a color-coordinated aluminum bottom rail. Each slat color is paired with a bottom rail default color or customers may select from any of the 21 colors available for 1" or 22 colors for 2" blinds listed to the right for a customized look.
- SimpleLift aluminum bottom rail is only available on Modern Precious Metals blinds ordered with the SimpleLift operating system.

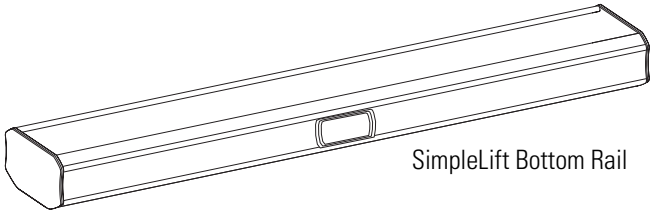

SimpleLift Bottom Rail

SimpleLift Bottom Rail Available Colors	
Aluminum Metallic - 044	Manilla Cream Textured - 560
Antique White Textured - 993	Meringue Textured - 2103
Bamboo Silk Textured - 302	Pencil Sketch Textured - 2139
Black Textured - 038	Platinum Gray Textured - 851
Bronze Textured - 084	Riding Boot Textured - 901[2]
Brushed Nickel Metallic - 237	Tender Taupe Textured - 391
Chenille Textured - 269[2]	Tuscan Tan Textured - 435[1]
Dapple Gray Textured - 2119	Venetian Bronze Textured - 242
Flaxen Textured - 2140	Waffle Cone Textured - 2124
Gardenia Textured - 852	White Diamond Textured - 116
Iron Gate Textured - 2136	White Tiara Textured - 591
Magnolia Textured - 2107	

[1] 1" blind color option only
[2] 2" blind color option only

Bottom Rail Color Coordination

Slat Color	Bottom Rail Default Color
Alabaster - 002	Meringue Textured - 2103
Almond - 830	Antique White Textured - 993
Antique White - 973	Antique White Textured - 993
Beige - 186	Flaxen Textured - 2140
Black - 048	Black Textured - 038
Blush - 3338	Platinum Gray Textured - 851
Bright Aluminum - 190	Aluminum Metallic - 044
Brilliant White - 3346	White Tiara Textured - 591
Bronze - 064	Bronze Textured - 084
Bronze Matte - 254	Bronze Textured - 084
Brown Sugar - 3342	Tender Taupe Textured - 391
Brownstone - 548	Riding Boot Textured - 901
Brushed Aluminum Metallic - 065	Aluminum Metallic - 044
Brushed Brass - 537	Tender Taupe Textured - 391
Brushed Copper - 3335	Waffle Cone Textured - 2124
Brushed Gold Metallic - 3334	Flaxen Textured - 2140
Brushed Nickel - 237	Brushed Nickel Metallic - 237
Cameo - 3336	Platinum Gray Textured - 851
Castaway - 3352	Platinum Gray Textured - 851
Chenille 1" - 269	Manilla Cream Textured - 560
Chenille 2" - 269	Chenille Textured - 269
Cinder - 913	Iron Gate Textured - 2136
Colonial Copper - 194	Venetian Bronze Textured - 242
Crème de la Crème - 268	Manilla Cream Textured - 560
Davenport - 914	Aluminum Metallic - 044
Dove Gray - 180	Tender Taupe Textured - 391
Dover Matte - 246	White Diamond Textured - 116
Dover Weave - 508	White Diamond Textured - 116
Fawn - 205	Gardenia Textured - 852
Flex White - 885	White Tiara Textured - 591
Flex White Weave - 507	White Tiara Textured - 591
Fossil Rock - 546	Tender Taupe Textured - 391
Frost Opalescence - 586	White Diamond Textured - 116

Slat Color	Bottom Rail Default Color
Gray Flannel - 405	Aluminum Metallic - 044
Graystone - 3340	Dapple Gray Textured - 2119
Hunter Green - 413	Black Textured - 038
Ice Cap - 3339	White Tiara Textured - 591
Inkwell - 3337	Black Textured - 038
Jute - 544	Bamboo Silk Textured - 302
Khaki - 383	Bamboo Silk Textured - 302
Linen - 270	Gardenia Textured - 852
Macadamia - 3351	Manilla Cream Textured - 560
Mica Opalescence - 588	Dapple Gray Textured - 2119
Naval - 3344	Black Textured - 038
Nordic Mist Opalescence - 587	Antique White Textured - 993
Pearl - 974	Magnolia Textured - 2107
Pearl Frost - 718	White Diamond Textured - 116
Picket Fence - 918	Antique White Textured - 993
Porcelain Pearl - 711	Magnolia Textured - 2107
Riding Boot - 911	Venetian Bronze Textured - 242
Sailor's Knot - 943	White Tiara Textured - 591
Sand Pebble - 539	Bamboo Silk Textured - 302
Satin Silver - 018	Aluminum Metallic - 044
Sea Glass - 3343	Brushed Nickel Metallic - 237
Sea Shell - 3348	Magnolia Textured - 2107
Silver Cloud - 318	Brushed Nickel Metallic - 237
Steel Wind - 262	Aluminum Metallic - 044
Stormy White Brushed - 161	Aluminum Metallic - 044
Tuscan Tan - 402	Tuscan Tan Textured - 435
Umber - 820	Bronze Textured - 084
Venetian Bronze Brushed - 234	Venetian Bronze Textured - 242
White Ice - 3347	White Tiara Textured - 591
White Oxford - 930	White Tiara Textured - 591
Winter Sky - 3350	White Diamond Textured - 116
Woodland Dusk - 909	Tender Taupe Textured - 391

Notes
Not all slat and bottom rail colors are available for each control system and bottom rail.

Product Summary

MODERN PRECIOUS METALS® ALUMINUM BLINDS

Price Chart Guide

Product Summary					
½"		1"		2"	
Price Chart	**Product**	**Price Chart**	**Product**	**Price Chart**	**Product**
MPM-1	1/2" Décor® .008	MPM-2	1" Celebrity® .006	MPM-4	2" Macro .008
		MPM-3	1" Décor .008		

Color	Price Charts
Alabaster - 002	MPM-2, MPM-3, MPM-4
Almond - 830	MPM-2, MPM-3, MPM-4
Antique White - 973	MPM-1, MPM-2, MPM-3, MPM-4
Beige - 186	MPM-2, MPM-3
Black - 048	MPM-2, MPM-3, MPM-4
Blush - 3338	MPM-3
Bright Aluminum - 190	MPM-2, MPM-3, MPM-4
Brilliant White - 3346	MPM-1, MPM-2, MPM-3, MPM-4
Bronze - 064	MPM-1, MPM-2, MPM-3, MPM-4
Bronze Matte - 254	MPM-3
Brown Sugar - 3342	MPM-3
Brownstone - 548	MPM-4
Brushed Aluminum Metallic - 065	MPM-1, MPM-2, MPM-3, MPM-4
Brushed Brass - 537	MPM-4
Brushed Copper - 3335	MPM-3
Brushed Gold Metallic - 3334	MPM-3
Brushed Nickel - 237	MPM-3, MPM-4
Cameo - 3336	MPM-3, MPM-4
Castaway - 3352	MPM-2
Chenille - 269	MPM-1, MPM-2, MPM-3, MPM-4
Cinder - 913	MPM-2, MPM-3
Colonial Copper - 194	MPM-3
Crème de la Crème - 268	MPM-2, MPM-3
Davenport - 914	MPM-3
Dove Gray - 180	MPM-2
Dover Matte - 246	MPM-3, MPM-4
Dover Weave - 508	MPM-3
Fawn - 205	MPM-1, MPM-2, MPM-3, MPM-4
Flex White - 885	MPM-1, MPM-2, MPM-3, MPM-4
Flex White Weave - 507	MPM-3
Fossil Rock - 546	MPM-4
Frost Opalescence - 586	MPM-2, MPM-3
Gray Flannel - 405	MPM-2, MPM-3
Graystone - 3340	MPM-3, MPM-4
Hunter Green - 413	MPM-3
Ice Cap - 3339	MPM-3, MPM-4

Color	Price Charts
Inkwell - 3337	MPM-3, MPM-4
Jute - 544	MPM-4
Khaki - 383	MPM-3
Linen - 270	MPM-2, MPM-3, MPM-4
Macadamia - 3351	MPM-3
Mica Opalescence - 588	MPM-3
Naval - 3344	MPM-3, MPM-4
Nordic Mist Opalescence - 587	MPM-2, MPM-3
Pearl - 974	MPM-1, MPM-2, MPM-3, MPM-4
Pearl Frost - 718	MPM-2
Picket Fence - 918	MPM-2, MPM-3
Porcelain Pearl - 711	MPM-1, MPM-3
Riding Boot - 911	MPM-2
Sailor's Knot - 943	MPM-2, MPM-3, MPM-4
Sand Pebble - 539	MPM-4
Satin Silver - 018	MPM-1, MPM-3, MPM-4
Sea Glass - 3343	MPM-3
Sea Shell - 3348	MPM-2, MPM-3, MPM-4
Silver Cloud - 318	MPM-2, MPM-3
Silverado - 276	MPM-3
Slate - 547	MPM-4
Snowbound - 3353	MPM-2, MPM-3, MPM-4
Snowy White Matte - 248	MPM-3, MPM-4
Steel Wind Brushed - 262	MPM-3
Stingray - 3341	MPM-3, MPM-4
Stone - 538	MPM-4
Stonecutter - 3349	MPM-2, MPM-3, MPM-4
Stoneware - 3345	MPM-3, MPM-4
Stormy White Brushed - 161	MPM-3
Tuscan Tan - 402	MPM-3
Umber - 820	MPM-2, MPM-3
Venetian Bronze Brushed - 234	MPM-3, MPM-4
White Ice - 3347	MPM-1, MPM-2, MPM-3, MPM-4
White Oxford - 930	MPM-3, MPM-4
Winter Sky - 3350	MPM-2, MPM-3
Woodland Dusk - 909	MPM-3, MPM-4

Size Standards

How to Use the Size Standards Charts

The Size Standards charts are designed to be a quick reference to size standards, price charts, and where to find further product specifications. Price charts are referenced by chart number next to the fabric style, and further product specifications are referenced by a link to the operating system. Additional information that may be needed is bulleted at the bottom of each chart.

Important: Blind dimensions must be equal to or less than the maximum dimensions (width, height and area) and equal to or greater than the minimum dimensions (width and height) to be within specification guidelines. Unless otherwise noted, all measurements reflect ordered dimensions.

SIZE STANDARDS	LiteRise® – 1" Decor®
	Single Blind
	Traditional Routed
1" DÉCOR (PRICE CHART C1)	
Min. Width	18 1/2"
Max. Width	96"
Min. Height	12"
Max. Height	84"
Max. Area (sq. ft.)	50"

Notes

- Slat alignment is not guaranteed on side-by-side blinds.
- Blinds longer than 72" in height may not close tightly. Closure on blinds with traditional ladders will tend to be tighter than blinds with decorative tapes.
- Based on blind square footage limitations, the allowable width and height of the blind will vary.
- Cut-outs are not available with LiteRise® blinds.

Operating System Specifications

Applications

- Fits rectangular window openings.
- Lift or lower the bottom rail with a touch of a finger.

Control Option

- Tilt wand (L)

Notes
- No other control positions are available.

Exclusions

- Cut-outs
- Decorative tapes
- End mount brackets
- Multiple blinds on one headrail
- PowerView® Gen 3 Automation

Additional Information

- Intermediate Bracket requirements, Ladder Standards, Wand Length Standards, and Stacking Heights: see "Additional Specifications" on page 35.
- Slat alignment is not guaranteed on side-by-side blinds.

Optional Features

No Charge

- Bracket shims
- Extension brackets
- Hold-down brackets
- Spacer blocks (1/2" or 7/8")
- Wand length override

Size Standards

See "LiteRise® – 1" Decor®" on page 9.

Mounting Requirements	
Inside Mount (IB)	
Minimum mounting depth, bracket attachment	1/2"
Minimum mounting depth, flush mount	1 5/8"
Outside Mount (OB)	
Minimum flat mounting surface height	5/8"
Recommended width overlap, per side	1 1/2"

Finished Dimensions	
Inside Mount (IB)	
Headrail width	–1/4"
Slat width	–1/2"
Blind height	ordered height
Outside Mount (OB)	
Headrail width	+1/4"
Slat width	ordered width
Blind height	ordered height

Notes
- All allowances are taken from ordered dimensions.
- Blind width tolerance +0/–1/8".
- Blind height tolerance –0/+1/4".

Ordering Notes

All Orders Are Final

All Hunter Douglas window coverings are custom fabricated and are not subject to change or cancellation. Our blinds feature subtle variations in color, grain, and texture that add authenticity and beauty to your home. These variations are within established industry standards and should be expected.

Surcharges

All items marked with an asterisk (*) require an additional surcharge. See the Hunter Douglas Price Guide.

Quantity and Design Options

Quantity
Complete one line item for every blind configuration that is the same.

Collection
Select: Décor

Slat Size
Select: 1 Inch

Control System
Select: LiteRise

Control System Style
Select: Bottom-Up

Color Options

Color
Select the color number and name from the list.

Size and Mounting Options

Ordered Size
Provide: Width and Height measurements for Standard (Bottom-Up) shades.
See "LiteRise® – 1" Decor®" on page 10 for tolerances.

Mount Type
Select: Inside Mount or Outside Mount
See "LiteRise® – 1" Decor®" on page 10 for standard deductions.
Inside Mount (IB)
Automatic deductions are made from the ordered width for inside mount applications.
Outside Mount (OB)
For outside mount applications, the measurement provided determines the width and height.

Tilt Type
Select: Wand Tilt

Tilt Length Override
Select: No or Tilt Length Override. For default wand lengths, see "Wand Length Standards" on page 36.

Custom Wand Tilt Length
If you have chosen a tilt length override, select one of the wand lengths from the list.
Wand length is defaulted; choose any of the above lengths to override.
Minimum wand length is 12".

Hardware Options

Spacer Blocks
Select:
- No
- 7/8 Inch Spacer Block
- 1/2 Inch Spacer Block

Hold Down Brackets
Select: No or Hold Down Brackets

Bracket Shim
Select: Bracket Shim or No
If shims are selected, select the number in the Shim Opt Qty field.

Special Instructions

This is a free form field in Direct Connect to add additional comments about the order.

Product View

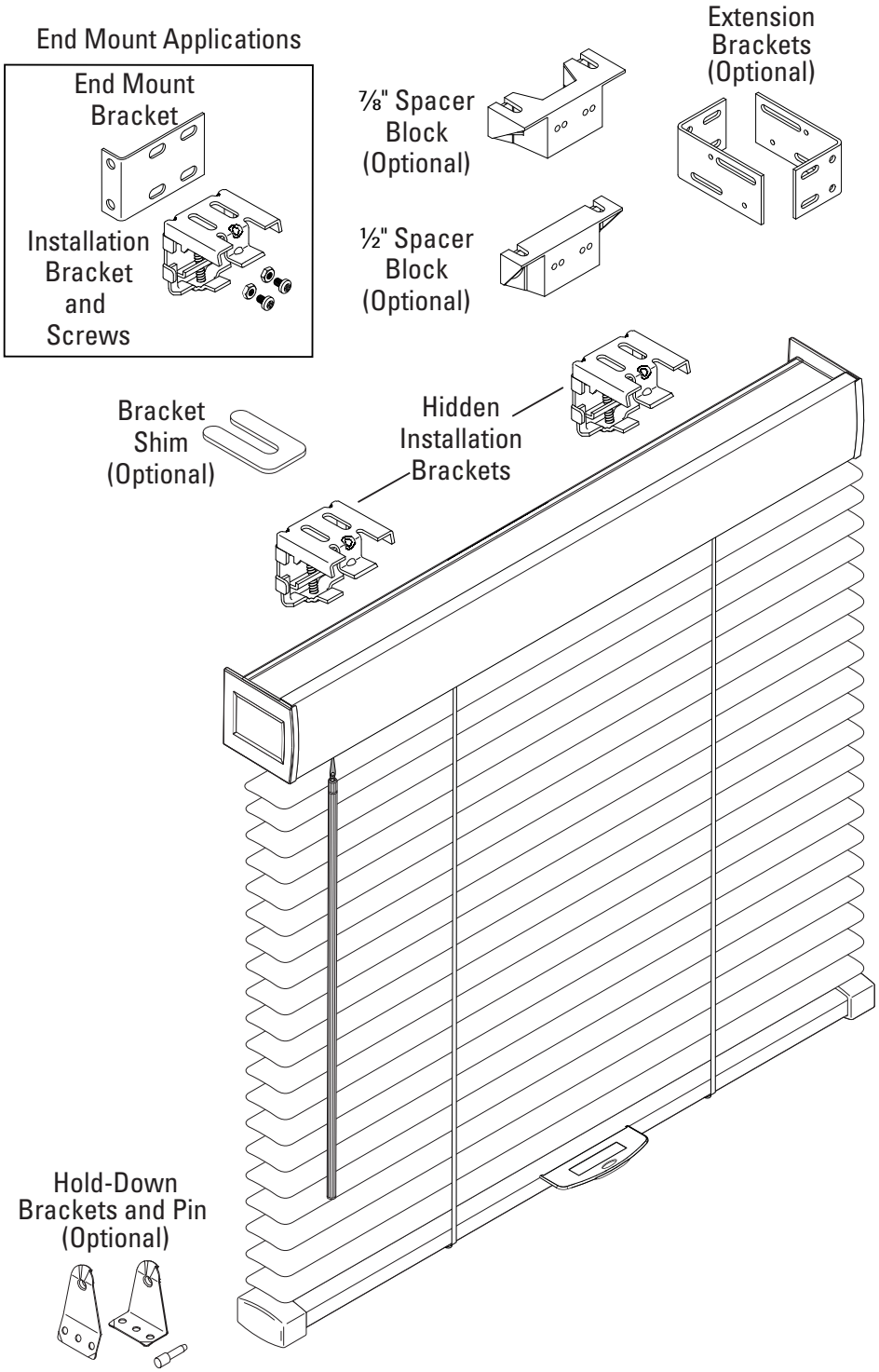

Size Standards

How to Use the Size Standards Charts

The Size Standards charts are designed to be a quick reference to size standards, price charts, and where to find further product specifications. Price charts are referenced by chart number next to the fabric style, and further product specifications are referenced by a link to the operating system. Additional information that may be needed is bulleted at the bottom of each chart.

Important: Blind dimensions must be equal to or less than the maximum dimensions (width, height and area) and equal to or greater than the minimum dimensions (width and height) to be within specification guidelines. Unless otherwise noted, all measurements reflect ordered dimensions.

SIZE STANDARDS	LiteRise® – 2" Macro
	Single Blind
	Traditional Routed
2" MACRO (PRICE CHART D1)	
Min. Width	18 1/2"
Max. Width	90"
Min. Height	12"
Max. Height	84"
Max. Area (sq. ft.)	52

Notes

- Slat alignment is not guaranteed on side-by-side blinds.
- Blinds longer than 72" in height may not close tightly. Closure on blinds with traditional ladders will tend to be tighter than blinds with decorative tapes.
- Based on blind square footage limitations, the allowable width and height of the blind will vary.
- Cut-outs are not available with LiteRise® blinds.

Operating System Specifications

Applications

- Fits rectangular window openings.
- Lift or lower the bottom rail with a touch of a finger.

Control Option

- Tilt wand (L)

Notes

- No other control positions are available.

Exclusions

- Cut-outs
- Decorative tapes
- Multiple blinds on one headrail
- PowerView® Gen 3 Automation

Additional Information

- Intermediate Bracket requirements, Ladder Standards, Wand Length Standards, and Stacking Heights: see "Additional Specifications" on page 35.
- Valance specifications: see "Valances" on page 33.
- Slat alignment is not guaranteed on side-by-side blinds.

Optional Features

No Charge

- Bracket shims
- Hold-down brackets
- Wand length override

Size Standards

See "LiteRise® – 2" Macro" on page 13.

Mounting Requirements	
Inside Mount (IB)	
Minimum mounting depth, bracket attachment	1 1/4"
Minimum mounting depth, fully recessed with Macro valance	3 1/8"
Outside Mount (OB)	
Minimum flat mounting surface height	1 3/4"
Recommended width overlap, per side	1 1/2"

Finished Dimensions	
Inside Mount (IB)	
Headrail width [1]	–1 3/4"
Slat width	–1/2"
Blind height	ordered height
Valance slat width	–3/8"
Outside Mount (OB)	
Headrail width [1]	–1 1/4"
Slat width	ordered width
Blind height	ordered height
Valance slat width	+1/8"

[1] With valance slat and end caps installed, deduction is –3/4".

Notes

- All allowances are taken from ordered dimensions.
- Blind width tolerance +0/–1/8".
- Blind height tolerance –0/+1/4".

Ordering Notes

All Orders Are Final

All Hunter Douglas window coverings are custom fabricated and are not subject to change or cancellation. Our blinds feature subtle variations in color, grain, and texture that add authenticity and beauty to your home. These variations are within established industry standards and should be expected.

Surcharges

All items marked with an asterisk (*) require an additional surcharge. See the Hunter Douglas Price Guide.

Quantity and Design Options

Quantity
Complete one line item for every blind configuration that is the same.

Collection
Select: Macro

Slat Size
Select: 2 Inch

Control System
Select: LiteRise

Control System Style
Select: Bottom-Up

Color Options

Color
Select the color number and name from the list.

Size and Mounting Options

Ordered Size
Provide: Width and Height measurements for Standard (Bottom-Up) shades.
See "LiteRise® – 2" Macro" on page 14 for tolerances.

Mount Type
Select: Inside Mount or Outside Mount
See "LiteRise® – 2" Macro" on page 14 for standard deductions.
Inside Mount (IB)
Automatic deductions are made from the ordered width for inside mount applications.
Outside Mount (OB)
For outside mount applications, the measurement provided determines the width and height.

Tilt Type
Select: Wand Tilt

Tilt Length Override
Select: No or Tilt Length Override. For default wand lengths, see "Wand Length Standards" on page 36.

Custom Wand Tilt Length
If you have chosen a tilt length override, select one of the wand lengths from the list.
Wand length is defaulted; choose any of the above lengths to override.
Minimum wand length is 12".

Hardware Options

Spacer Blocks
Select:
- No
- 7/8 Inch Spacer Block
- 1/2 Inch Spacer Block

Hold Down Brackets
Select:
- No
- Hold Down Brackets Jamb
- Hold Down Brackets Sill

Bracket Shim
Select: Bracket Shim or No
If shims are selected, select the number in the Shim Opt Qty field.

Special Instructions

This is a free form field in Direct Connect to add additional comments about the order.

Product View

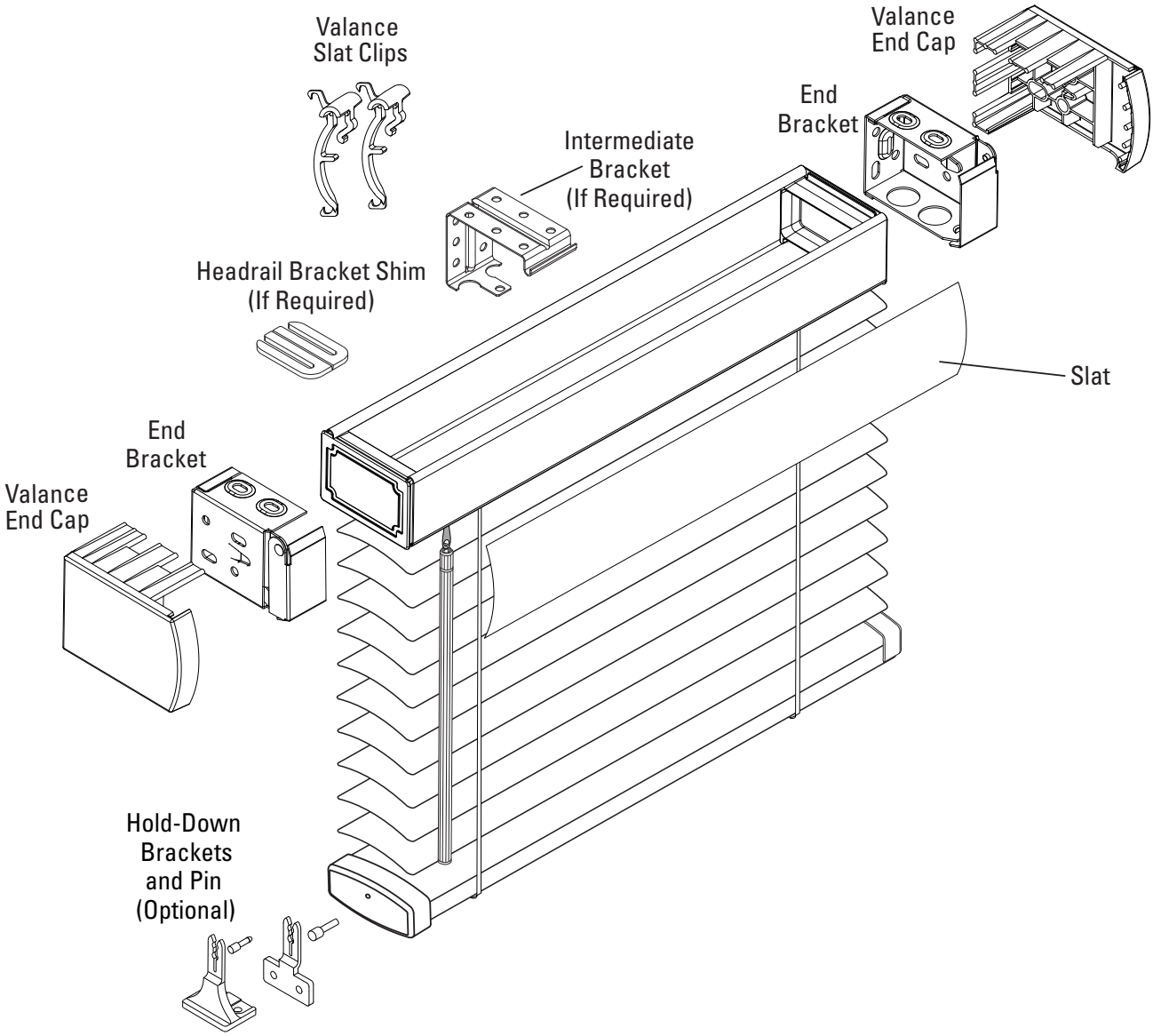

Size Standards

How to Use the Size Standards Charts

The Size Standards charts are designed to be a quick reference to size standards, price charts, and where to find further product specifications. Price charts are referenced by chart number next to the fabric style, and further product specifications are referenced by a link to the operating system. Additional information that may be needed is bulleted at the bottom of each chart.

Important: Blind dimensions must be equal to or less than the maximum dimensions (width, height and area) and equal to or greater than the minimum dimensions (width and height) to be within specification guidelines. Unless otherwise noted, all measurements reflect ordered dimensions.

SIZE STANDARDS	SimpleLift™ – 1" Celebrity® and ½" & 1" Décor®		
	Single Blind	Two-On-One Headrail	Three-On-One Headrail
	Traditional Routed/Decorative Tapes		
½" DÉCOR® (PRICE CHART A1)			
Min. Width	12½"	25¼"	38"
Max. Width	120"	120"	120"
Min. Height	6"	6"	6"
Max. Height	84"	84"	84"
Max. Area (sq. ft.)	70	70	70
1" CELEBRITY® (PRICE CHART B1)			
Min. Width	12½"	25¼"	38"
Max. Width	144"	144"	144"
Min. Height	6"	6"	6"
Max. Height	84"	84"	84"
Max. Area (sq. ft.)	84	84	84
1" DÉCOR (PRICE CHART C1)			
Min. Width	12½"	25¼"	38"
Max. Width	144"	144"	144"
Min. Height	6"	6"	6"
Max. Height	84"	84"	84"
Max. Area (sq. ft.)	84	84	84

Notes

- For multiple blinds on one headrail, the default space between blinds with traditional routed/decorative tapes is ¼".
- Slat alignment is not guaranteed on multiple blinds on one headrail or on side-by-side blinds.
- With Two- or Three-On-One Headrail blinds, no panel within the blind may be specified outside of single blind specifications.
- Blinds longer than 72" in height may not close tightly. Closure on blinds with traditional ladders will tend to be tighter than blinds with decorative tapes.
- Based on blind square footage limitations, the allowable width and height of the blind will vary.

Operating System Specifications

Applications

- Fits rectangular window openings.
- Color-coordinated aluminum bottom rail uses internal components to raise and lower the blind with a push-button.
- Standard operating system for 1/2" and 1" blinds.

Control Options

Standard

- Tilt wand (L)

Optional

- Tilt wand (R)

Exclusions

- Decorative tapes
- PowerView® Gen 3 Automation

Additional Information

- Intermediate Bracket requirements, Ladder Standards, Wand Length Standards, and Stacking Heights: see "Additional Specifications" on page 35.
- Slat alignment is not guaranteed on multiple blinds on one headrail or on side-by-side blinds.

Optional Features

No Charge

- Bracket shims
- End (EB) mount brackets[1]
- Extension brackets
- Hold-down brackets
- SimpleLift™ bottom rail color (if default is not desired)
- Spacer blocks (1/2" or 7/8")
- Wand length override

[1] End (EB) mount brackets are not available on center tilt/no tilt blinds.

Surcharge

- Cut-outs
- Multiple blinds on one headrail

Notes

- See the Hunter Douglas Price Guide for price information.

Size Standards

See "SimpleLift™ – 1" Celebrity® and ½" & 1" Décor®" on page 17.

Mounting Requirements	
Inside Mount (IB)	
Minimum mounting depth, bracket attachment	1/2"
Minimum mounting depth, flush mount	1 5/8"
Outside Mount (OB)	
Minimum flat mounting surface height	5/8"
Recommended width overlap, per side	1 1/2"

Finished Dimensions	
Inside Mount (IB)	
Headrail width	–1/4"
Slat width	–1/2"
Blind height	ordered height
Outside Mount (OB)	
Headrail width	+1/4"
Slat width	ordered width
Blind height	ordered height

Notes

- All allowances are taken from ordered dimensions.
- Blind width tolerance +0/–1/8".
- Blind height tolerance –0/+1/4".
- End Mount Brackets are available to order as a separate parts order.

Ordering Notes

All Orders Are Final

All Hunter Douglas window coverings are custom fabricated and are not subject to change or cancellation. Our blinds feature subtle variations in color, grain, and texture that add authenticity and beauty to your home. These variations are within established industry standards and should be expected.

Surcharges

All items marked with an asterisk (*) require an additional surcharge. See the Hunter Douglas Price Guide.

Quantity and Design Options

Quantity
Complete one line item for every blind configuration that is the same.

Collection
Select: Celebrity or Décor

Slat Size
Select:
- ½ Inch (Décor only)
- 1 Inch (Celebrity or Décor)

Control System
Select: SimpleLift

Control System Style
Select: Bottom-Up

Color Options

Color
Select the color number and name from the list.

SimpleLift™ Bottom Rail Color
Each slat color is paired with a default bottom rail color or customers may override default at no surcharge.
The system will automatically enter the default bottom rail color. You may select a different color from the list to override that color.
See "SimpleLift™ System Bottom Rail Colors" on page 6 for color options.

Size and Mounting Options

Ordered Size
Provide: Width and Height measurements for Standard (Bottom-Up) shades.
See "SimpleLift™ – 1" Celebrity® and ½" & 1" Décor®" on page 18 for tolerances.

Mount Type
Select: Inside Mount or Outside Mount
See "SimpleLift™ – 1" Celebrity® and ½" & 1" Décor®" on page 18 for standard deductions.

Inside Mount (IB)
Automatic deductions are made from the ordered width for inside mount applications.

Outside Mount (OB)
For outside mount applications, the measurement provided determines the width and height.

Note: End Mount Brackets are available to order as a separate parts order.

Multiple Panel Shades

Blinds on Headrail
Select:
- Single Panel Shade
- Two-on-One Headrail*
- Three-on-One Headrail*

For products with more than one blind on the headrail, provide the width and tilt-wand position for each panel of the blind.

Tilt Wand

Tilt Position
Select: Left or Right
Standard tilt position is on the left; right position is optional.

Tilt Length Override
Select: No or Tilt Length Override. For default wand lengths, see "Wand Length Standards" on page 36.

Custom Wand Tilt Length
If you have chosen a tilt length override, select one of the wand lengths from the list.
Wand length is defaulted; choose any of the above lengths to override.
Minimum wand length is 12".

Cut Outs*

Select: No or Cut Outs
If the product is ordered with cut outs, provide the position, height, and width of each cut out.

Hardware Options

Spacer Blocks
Select:
- No
- ⅞ Inch Spacer Block
- ½ Inch Spacer Block

Hold Down Brackets
Select:
- No
- Hold Down Brackets Jamb
- Hold Down Brackets Sill

Bracket Shim
Select:
- Bracket Shim
- No

If shims are selected, select the number in the Shim Opt Qty field.

Special Instructions

This is a free form field in Direct Connect to add additional comments about the order.

Product Views

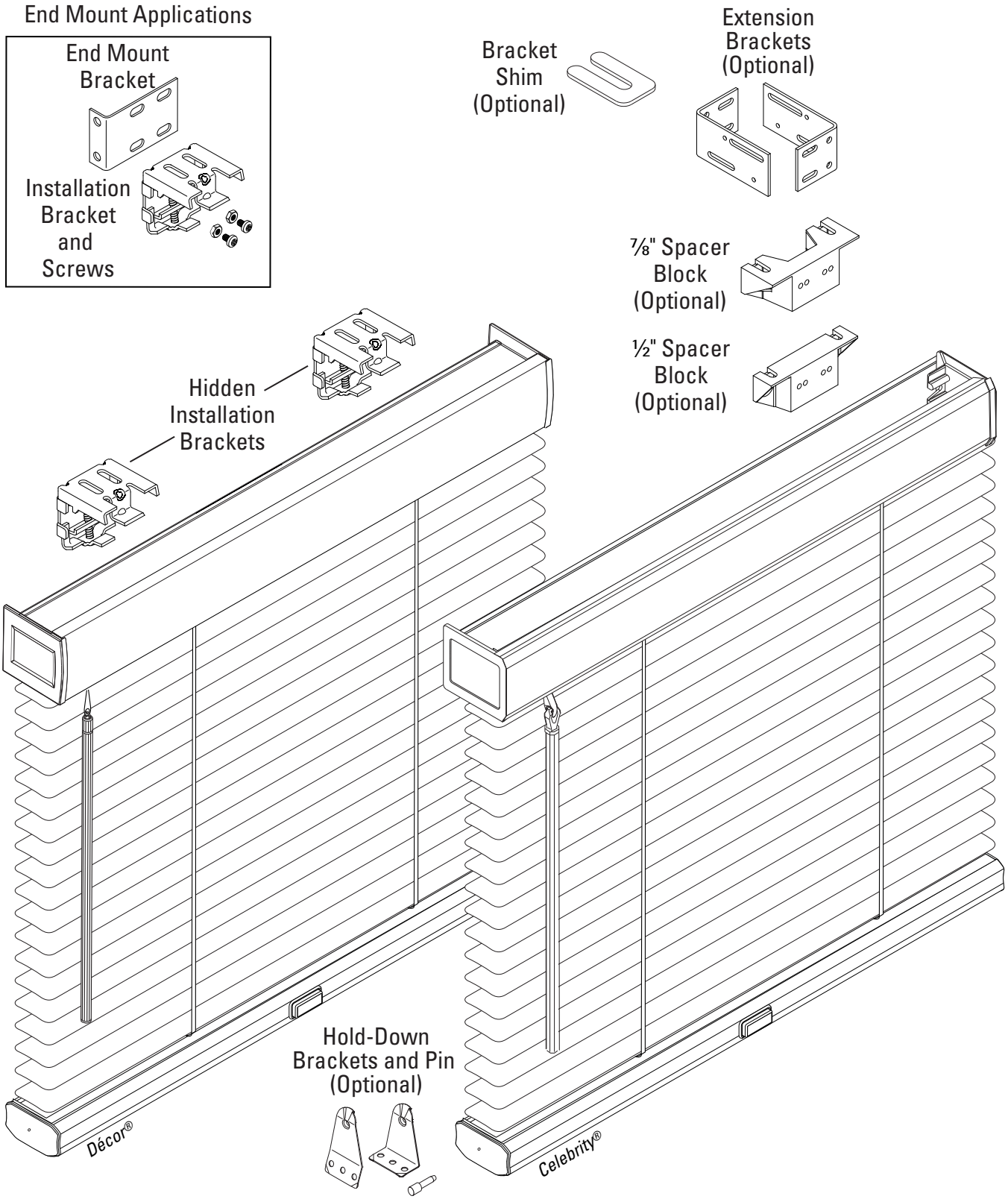

Size Standards

How to Use the Size Standards Charts

The Size Standards charts are designed to be a quick reference to size standards, price charts, and where to find further product specifications. Price charts are referenced by chart number next to the fabric style, and further product specifications are referenced by a link to the operating system. Additional information that may be needed is bulleted at the bottom of each chart.

Important: Blind dimensions must be equal to or less than the maximum dimensions (width, height and area) and equal to or greater than the minimum dimensions (width and height) to be within specification guidelines. Unless otherwise noted, all measurements reflect ordered dimensions.

SIZE STANDARDS	SimpleLift™ – 2" Macro		
	Single Blind	Two-On-One Headrail	Three-On-One Headrail
	Traditional Routed/Decorative Tapes		
2" MACRO (PRICE CHART D1)			
Min. Width	12 1/2"	25 1/4"	38"
Max. Width	120"	120"	120"
Min. Height	12"	12"	12"
Max. Height	96"	96"	96"
Max. Area (sq. ft.)	80	80	80

Notes

- For multiple blinds on one headrail, the default space between blinds with traditional routed/decorative tapes is 1/4".
- Slat alignment is not guaranteed on multiple blinds on one headrail or on side-by-side blinds.
- With Two- or Three-On-One Headrail blinds, no panel within the blind may be specified outside of single blind specifications.
- Blinds longer than 72" in height may not close tightly. Closure on blinds with traditional ladders will tend to be tighter than blinds with decorative tapes.
- Based on blind square footage limitations, the allowable width and height of the blind will vary.

Operating System Specifications

Applications

- Fits rectangular window openings.
- Color-coordinated aluminum bottom rail uses internal components to raise and lower the blind with a push-button.
- Standard operating system for 2" blinds.

Control Options

Standard

- Tilt wand (L)

Optional

- Tilt wand (R)

Additional Information

- Intermediate Bracket requirements, Ladder Standards, Wand Length Standards, and Stacking Heights: see "Additional Specifications" on page 35.
- Valance specifications: see "Valances" on page 33.
- Slat alignment is not guaranteed on multiple blinds on one headrail or on side-by-side blinds.
- SimpleLift is available with PowerView® Gen 3 Automation Tilt-Only, see "SimpleLift™ with PowerView Gen 3 Automation Tilt-Only" on page 26.

Optional Features

No Charge

- Bracket shims
- Hold-down brackets
- SimpleLift™ bottom rail color (if default is not desired)
- Wand length override

Surcharge

- Cut-outs
- Decorative tapes
- Multiple blinds on one headrail

Notes

- See the Hunter Douglas Price Guide for price information.

Size Standards

See "SimpleLift™ – 2" Macro" on page 21.

Mounting Requirements	
Inside Mount (IB)	
Minimum mounting depth, bracket attachment	1 1/4"
Minimum mounting depth, fully recessed with Macro valance	3 1/8"
Outside Mount (OB)	
Minimum flat mounting surface height	1 3/4"
Recommended width overlap, per side	1 1/2"

Finished Dimensions	
Inside Mount (IB)	
Headrail width [1]	–1 3/4"
Slat width	–1/2"
Blind height	ordered height
Valance slat width	–3/8"
Outside Mount (OB)	
Headrail width [1]	–1 1/4"
Slat width	ordered width
Blind height	ordered height
Valance slat width	+1/8"

[1] With valance slat and end caps installed, deduction is –3/4".

Notes

- All allowances are taken from ordered dimensions.
- Blind width tolerance +0/–1/8".
- Blind height tolerance –0/+1/4".

Ordering Notes

All Orders Are Final

All Hunter Douglas window coverings are custom fabricated and are not subject to change or cancellation. Our blinds feature subtle variations in color, grain, and texture that add authenticity and beauty to your home. These variations are within established industry standards and should be expected.

Surcharges

All items marked with an asterisk (*) require an additional surcharge. See the Hunter Douglas Price Guide.

Quantity and Design Options

Quantity
Complete one line item for every blind configuration that is the same.

Collection
Select: Macro

Slat Size
Select: 2 Inch

Control System
Select: SimpleLift

Control System Style
Select: Bottom-Up

Color Options

Color
Select the color number and name from the list.

SimpleLift™ Bottom Rail Color
Each slat color is paired with a default bottom rail color or customers may override default at no surcharge.
The system will automatically enter the default bottom rail color. You may select a different color from the list to override that color.
See "SimpleLift™ System Bottom Rail Colors" on page 6 for color options.

Size and Mounting Options

Ordered Size
Provide: Width and Height measurements for Standard (Bottom-Up) shades.
See "SimpleLift™ – 2" Macro" on page 22 for tolerances.

Mount Type
Select: Inside Mount or Outside Mount
See "SimpleLift™ – 2" Macro" on page 22 for standard deductions.
Inside Mount (IB)
Automatic deductions are made from the ordered width for inside mount applications.
Outside Mount (OB)
For outside mount applications, the measurement provided determines the width and height.

Multiple Panel Shades

Blinds on Headrail
Select:
- Single Panel Shade
- Two-on-One Headrail*
- Three-on-One Headrail*

For products with more than one blind on the headrail, provide the width and tilt-wand position for each panel of the blind.

Tilt Wand

Tilt Position
Select: Left or Right
Standard tilt position is on the left; right position is optional.

Tilt Type
Select: Wand Tilt

Tilt Length Override
Select: No or Tilt Length Override. For default wand lengths, see "Wand Length Standards" on page 36.

Ladder Option
Select Decorative Tape or Traditional Routed.
For products with Decorative Tape, select the Decorative Tape Color

Custom Wand Tilt Length
If you have chosen a tilt length override, select one of the wand lengths from the list.
Wand length is defaulted; choose any of the above lengths to override.
Minimum wand length is 12".

Cut Outs*

Select: No or Cut Outs
If the product is ordered with cut outs, provide the position, height, and width of each cut out.

Hardware Options

Spacer Blocks
Select:
- No
- 7/8 Inch Spacer Block
- 1/2 Inch Spacer Block

Hold Down Brackets
Select:
- No
- Hold Down Brackets Jamb
- Hold Down Brackets Sill

Bracket Shim
Select: Bracket Shim or No
If shims are selected, select the number in the Shim Opt Qty field.

Special Instructions

This is a free form field in Direct Connect to add additional comments about the order.

Product View

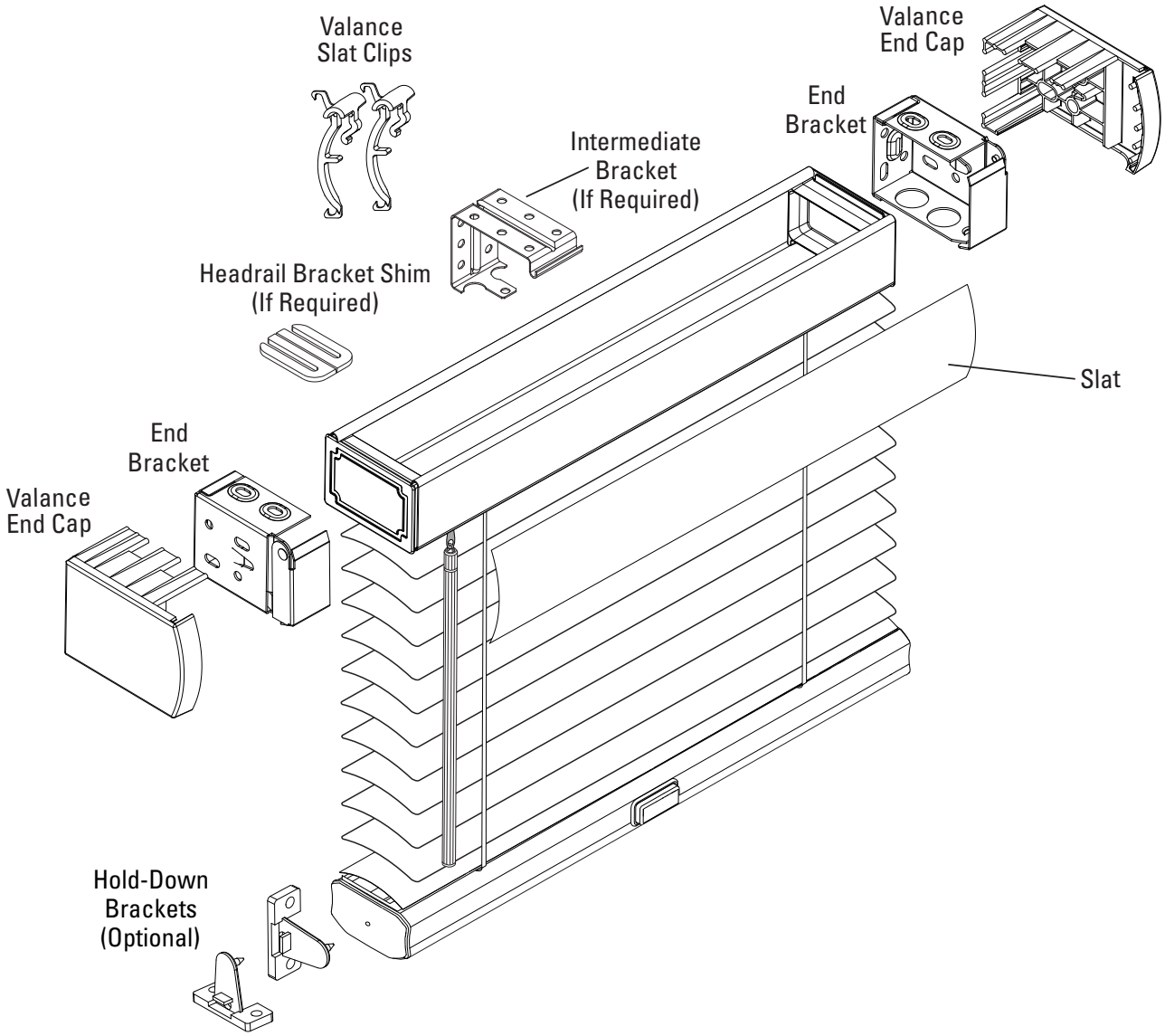

Size Standards – 2" Macro

How to Use the Size Standards Charts

The Size Standards charts are designed to be a quick reference to size standards, price charts, and where to find further product specifications. Price charts are referenced by chart number next to the fabric style, and further product specifications are referenced by a link to the operating system. Additional information that may be needed is bulleted at the bottom of each chart.

Important: Blind dimensions must be equal to or less than the maximum dimensions (width, height and area) and equal to or greater than the minimum dimensions (width and height) to be within specification guidelines. Unless otherwise noted, all measurements reflect ordered dimensions.

SIZE STANDARDS	SimpleLift™ with PowerView Gen 3 Automation Tilt-Only	
	Single Blind	Two-On-One Headrail
	Traditional Routed/Decorative Tapes	
2" MACRO (PRICE CHART D1)		
Min. Width	18 1/2"	37 1/4"
Max. Width	120"	120"
Min. Height	12"	12"
Max. Height	96"	96"
Max. Area (sq. ft.)	80	80

Notes

- For multiple blinds on one headrail, the default space between blinds with traditional routed/decorative tapes is 1/4".
- Slat alignment is not guaranteed on multiple blinds on one headrail or on side-by-side blinds.
- With Two-On-One Headrail blinds, no panel within the blind may be specified outside of single blind specifications.
- Blinds longer than 72" in height may not close tightly. Closure on blinds with traditional ladders will tend to be tighter than blinds with decorative tapes.
- Based on blind square footage limitations, the allowable width and height of the blind will vary.
- Headrail cut-outs are not available with SimpleLift™ with PowerView® Gen 3 Automation blinds.
- SimpleLift with PowerView Gen 3 Automation blinds require that the battery wand be mounted outside of the headrail on blinds from 18" to 26 1/4" wide (FINISHED slat width).
- SimpleLift with PowerView Gen 3 Automation blinds with the rechargeable battery wand will require the battery wand to be mounted outside of the headrail, regardless of blind width.

Operating System Specifications

Applications

- Fits rectangular window openings.
- Combines the ease of the SimpleLift™ system with PowerView® Gen 3 Automation for a completely convenient operation.
- PowerView Gen 3 Automation is tilt-only. The SimpleLift system is used to raise and lower the blind.

Control Options

Standard

- Motor (L)

Optional

- Motor (R)

Control Limitations

Two-On-One Headrail blinds will be made with separate motors for each individual blind and may tilt at different speeds. The motors will be located on opposite ends of the blind. A single tilt control is not available.

Exclusions

- Headrail cut-outs
- Headrail-mounted rechargeable battery wand
- Three-On-One Headrail

Additional Information

- Battery wand must be mounted outside of the headrail on blinds from 18" to 26 1/4" wide (FINISHED slat width).
- If ordered, the rechargeable battery wand must be mounted outside of the headrail, regardless of blind width.
- For more information regarding SimpleLift with PowerView Gen 3 Automation design and operation, see the PowerView Gen 3 Automation section of this Reference Guide.
- Intermediate Bracket requirements, Ladder Standards, and Stacking Heights information: see "Additional Specifications" on page 35.
- Valance specifications: see "Valances" on page 33.
- Slat alignment is not guaranteed on Two-On-One Headrail or on side-by-side blinds.

Optional Features

No Charge

- Bracket shims
- Hold-down brackets
- SimpleLift bottom rail color (if default is not desired)

Surcharge

- Cut-outs
- Decorative tapes
- PowerView Gen 3 accessories
- Two-On-One Headrail

Notes

- See the Hunter Douglas Price Guide for price information.

Size Standards

See "SimpleLift with PowerView Gen 3 Automation Tilt-Only" on page 25.

Mounting Requirements	
Inside Mount (IB)	
Minimum mounting depth, bracket attachment	1 1/4"
Minimum mounting depth, fully recessed with Macro valance	3 1/8"
Outside Mount (OB)	
Minimum flat mounting surface height	1 3/4"
Recommended width overlap, per side	1 1/2"

Notes

- If planning to install a Solar Charger, consider the size, placement, and mounting requirements. For Solar Charger dimensions and cable lengths, see the PowerView section of the Reference Guide. For mounting requirements, see the Solar Charger Installation Guide.

Finished Dimensions	
Inside Mount (IB)	
Headrail width [1]	–1 3/4"
Slat width	–1/2"
Blind height	ordered height
Valance slat width	–3/8"
Outside Mount (OB)	
Headrail width [1]	–1 1/4"
Slat width	ordered width
Blind height	ordered height
Valance slat width	+1/8"

[1] With valance slat and end caps installed, deduction is –3/4".

Notes

- All allowances are taken from ordered dimensions.
- Blind width tolerance +0/–1/8".
- Blind height tolerance –0/+1/4".

Ordering Notes

See also "PowerView® Gen 3 Power Supplies" on page 28 and "PowerView® Gen 3 Accessories" on page 28 to complete the order.

All Orders Are Final

All Hunter Douglas window coverings are custom fabricated and are not subject to change or cancellation. Our blinds feature subtle variations in color, grain, and texture that add authenticity and beauty to your home. These variations are within established industry standards and should be expected.

Surcharges

All items marked with an asterisk (*) require an additional surcharge. See the Hunter Douglas Price Guide.

Quantity and Design Options

Quantity

Complete one line item for every blind configuration that is the same.

Collection

Select: Macro

Slat Size

Select: 2 Inch

Control System

Select: SimpleLift with PowerView

Control System Style

Select: Bottom-Up

Product Version

Select: Gen 3 Automation

Color Options

Color

Select the color number and name from the list.

SimpleLift™ Bottom Rail Color

Each slat color is paired with a default bottom rail color or customers may override default at no surcharge.
The system will automatically enter the default bottom rail color. You may select a different color from the list to override that color.
See "SimpleLift™ System Bottom Rail Colors" on page 6 for color options.

Size and Mounting Options

Ordered Size

Provide: Width and Height measurements for Standard (Bottom-Up) shades.
See "SimpleLift with PowerView Gen 3 Automation Tilt-Only" on page 25 for tolerances.

Mount Type

Select: Inside Mount or Outside Mount
See "SimpleLift™ with PowerView Gen 3 Automation Tilt-Only" on page 26 for standard deductions.

Inside Mount (IB)
Automatic deductions are made from the ordered width for inside mount applications.

Outside Mount (OB)
For outside mount applications, the measurement provided determines the width and height.

Multiple Panel Shades

Blinds on Headrail

Select:
- Single Panel Shade
- Two-on-One Headrail*

Three-on-One Headrail blinds are not available with PowerView® Gen 3 Automation Tilt-Only.
For products with more than one blind on the headrail, provide the width and tilt-wand position for each panel of the blind.

Control Options

Receiver Option

Select:
- Left RF Receiver
- Right RF Receiver

Ladder Option

Select Decorative Tape or Traditional Routed.
For products with Decorative Tape, select the Decorative Tape Color

Cut Outs*

Select: No or Cut Outs
If the product is ordered with cut outs, provide the position, height, and width of each cut out.
Headrail Cut Outs are not available with PowerView® Gen 3 Automation Tilt-Only.

Hardware Options

Spacer Blocks

Select:
- No
- 7/8 Inch Spacer Block
- 1/2 Inch Spacer Block

Hold Down Brackets

Select:
- No
- Hold Down Brackets Jamb
- Hold Down Brackets Sill

Bracket Shim

Select: Bracket Shim or No
If shims are selected, select the number in the Shim Opt Qty field.

Special Instructions

This is a free form field in Direct Connect to add additional comments about the order.

PowerView® Gen 3 Power Supplies

See also "SimpleLift™ with PowerView Gen 3 Automation Tilt-Only" on page 26 to complete the order.

- A power supply option must be selected for standard PowerView® Gen 3 shades. Available power supply options are listed below.
- Select spare power supplies can be ordered as accessories in a product quote.
- Additional power supplies may also be ordered as parts in DirectConnect.

Rechargeable Battery Wand

- The rechargeable battery wand assembles into its respective rechargeable battery mount, which can be clipped to the rear of the headrail or satellite-mounted. Select the desired battery location when ordering.
  - **Headrail Mount:** The rechargeable battery will be clipped to the rear of the headrail using the included clips.
  - **Satellite Mount:** The rechargeable battery will be mounted to the wall or window frame using the included mount and screws. Select the desired extension cable length: 6", 15", 4', 10', or 20'.
- To recharge battery wands, Hunter Douglas provides two charging options, a dual charging station and a single charger. Chargers are sold separately, and can be ordered via the PowerView Accessories page of DirectConnect.

Battery Wand

A preloaded alkaline battery wand comes standard with product and is mounted behind the headrail. There is no additional charge for the Battery Wand.

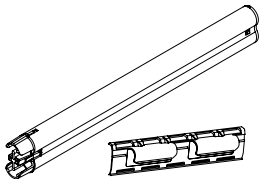

Satellite Battery Pack

Select cable length: 6", 15", 4', 10', or 20'
The satellite battery pack connects to the right side of the headrail where the programming button is located. It is often the best choice when the window treatment is mounted in a high window, restricting access to a battery wand, or when mounting depth is low.

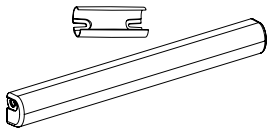

18V DC Power Supply

Select cable length: 15", 4', 10', 20'.
The 18V DC Power Supply plugs into any standard household outlet and eliminates the need to use batteries on PowerView® Gen 3 systems.

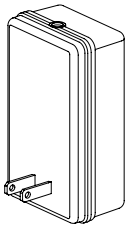

Daisy-Chain Cable

Select cable length: 15", 4', 10', 20'.

- Extension cables are used with the Y Adapter(s) to create a daisy-chain cable.
- "Daisy-chain" refers to the method of powering up to three blinds from a single 18V DC Power Supply (required, not included).
- Each daisy-chained blind can be operated individually. The maximum total cable length for a daisy-chain cannot exceed 50'.

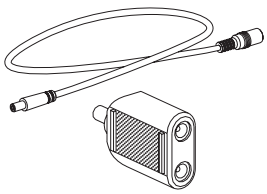

16 Shade DC Power Supply

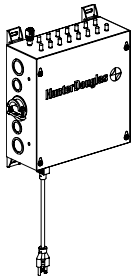

- Powers up to 16 window treatments using low-voltage wiring.
- When ordering, only one power supply is required to power up to 16 shades. For the other shades, the power supply type should be entered as "No Power Source."
- Do not daisy-chain blinds when using the 16 Shade DC Power Supply.

PowerView® Gen 3 Accessories

PowerView® Gen 3 Remote

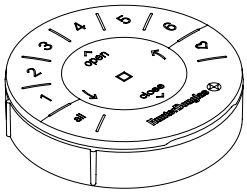

Select Quantity next to Remote color: Black or White
The PowerView® Gen 3 Remote offers precise control of PowerView Gen 3 window treatments. The remote can be used to operate shades individually, in groups, and through "Favorite" positions. It must be ordered with a PowerView Pebble® or Surface.

PowerView® Pebble®

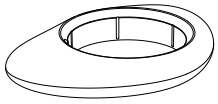

Select Quantity next to Pebble color: Black, Citron, Clear Frost, Cobalt, Ecru, Mist, Oyster, Pewter Frost, Poppy, or White

- The PowerView Pebble® is an ergonomically designed colored housing matched with the remote module for handheld operation of PowerView Gen 3 window treatments.
- Remote sold separately.

PowerView® Surface

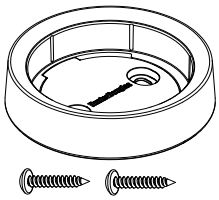

Select Quantity next to Surface color: Black, Nickel or White
The PowerView® Surface is a wall-mounted colored housing matched with the remote module for wall-mounted operation of PowerView Gen 3 window treatments.

PowerView® Gen 3 Gateway

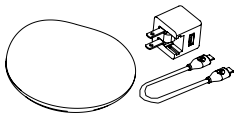

Select Quantity
The PowerView® Gen 3 Gateway is used in larger PowerView® Gen 3 systems to ensure optimal performance. It can also be added to any PowerView® Gen 3 system to provide integration with third-party control systems and devices. The PowerView® Gen 3 Gateway is the entry level Gateway model. It can easily be added to any system. PowerView® Gen 3 Gateway comes with power cable.

PowerView® Gen 3 Gateway Pro

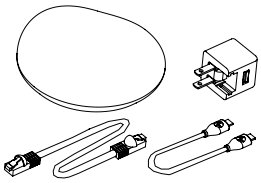

Select Quantity.
The PowerView® Gen 3 Gateway is used in larger PowerView® Gen 3 systems to ensure optimal performance. It can also be added to any PowerView® Gen 3 system to Provide integration with third-party control systems and devices. The PowerView® Gen 3 Gateway Pro offers advanced features and versatility that makes it ideal for a wide variety of installations and custom solutions. PowerView® Gen 3 Gateway Pro comes with power cable and Ethernet cable.

SimpleLift with PowerView Gen 3 Automation Tilt-Only

MODERN PRECIOUS METALS® ALUMINUM BLINDS

PowerView® Gen 3 Gateway Mount

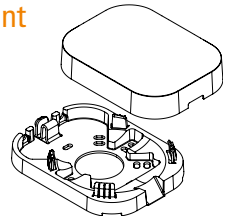

Select Quantity

The PowerView® Gen 3 Gateway Mount offers an elegant solution to affix the Gen 3 Gateway or Gen 3 Gateway Pro to a variety of mounting surfaces, including ceilings and walls.

Spare Rechargeable Battery Wand

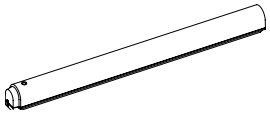

Provide: Quantity

When determining how many spares to order, please consider the following: the number of shades, the use/frequency of each shade, how often you might need to recharge the batteries installed in those shades, and ease of access to shades. The battery wands takes two to three hours to recharge and shades are not operable during that time. Three hour max charge time with the dual charging station and two hour max charge time with the single charger. You could use either to charge a spare wand. Order the appropriate number of spares.

Dual Charging Station

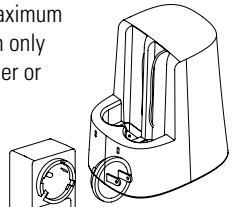

The Dual Charging Station charges up to two rechargeable battery wands simultaneously. Maximum recharge time is three hours. Battery wands can only be recharged with Hunter Douglas Single Charger or Dual Charging Station.

Wand Charger Kit

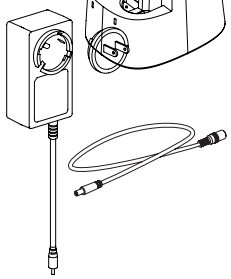

The wand charger kit includes the Single Charger and your choice of charging cable. The Single Charger charges one rechargeable battery wand in two hours or less, and allows for charging in place. Please select the desired charging cable length: retractable (13'), 3', 12'. Rechargeable battery wands can only be recharged with Hunter Douglas Single Charger or Dual Charging Station.

Extra Retractable Charging Cable

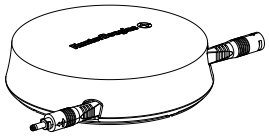

Select quantity if you need any additional retractable charging cables. The retractable charging cable measures 13'. Mix and match up to two charging cables in order to reach the shade and charge in place. The retractable cable module must rest on a flat surface like a table or floor.

Extra 3' or 12' Charging Cable

Select quantity if you need any additional retractable charging cables. Mix up to two charging cables in order to reach the shade and charge in place.

Solar Charger Kit

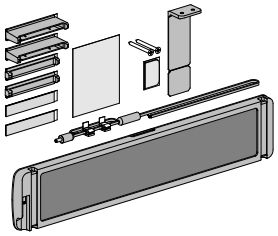

Select Quantity and Color:

Black or White

The Solar Charger is an add-on power supply designed to extend the operational life of a rechargeable battery-equipped shade by utilizing solar energy captured at the window. It can be mounted directly to the window glass or to the window jamb.

The Solar Charger comes in a kit that includes mounting accessories and a solar charging cable for use with the rechargeable battery wand. Each Solar Charger can charge one rechargeable battery-powered shade.

Quick-Lever Barrel Connectors – Female

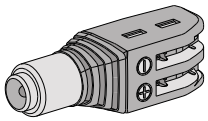

Select pack Quantity (8 pieces/pack)

Barrel connectors are used to create the custom cables that supply DC power to PowerView Gen 3 motors. The female barrel connector is required to connect the custom cable to the male barrel connector on the PowerView Gen 3 motor's power cable. Four packages of Quick-Lever barrel connectors (32 total count) are included with each 16 Shade DC Power Supply.

Screw to Barrel Connectors – Male

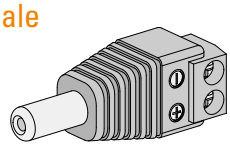

Select pack Quantity (10 pieces/pack)

Male Barrel Connectors are used to create the custom cables that supply DC Power to PowerView Gen 3 motors.

Product View

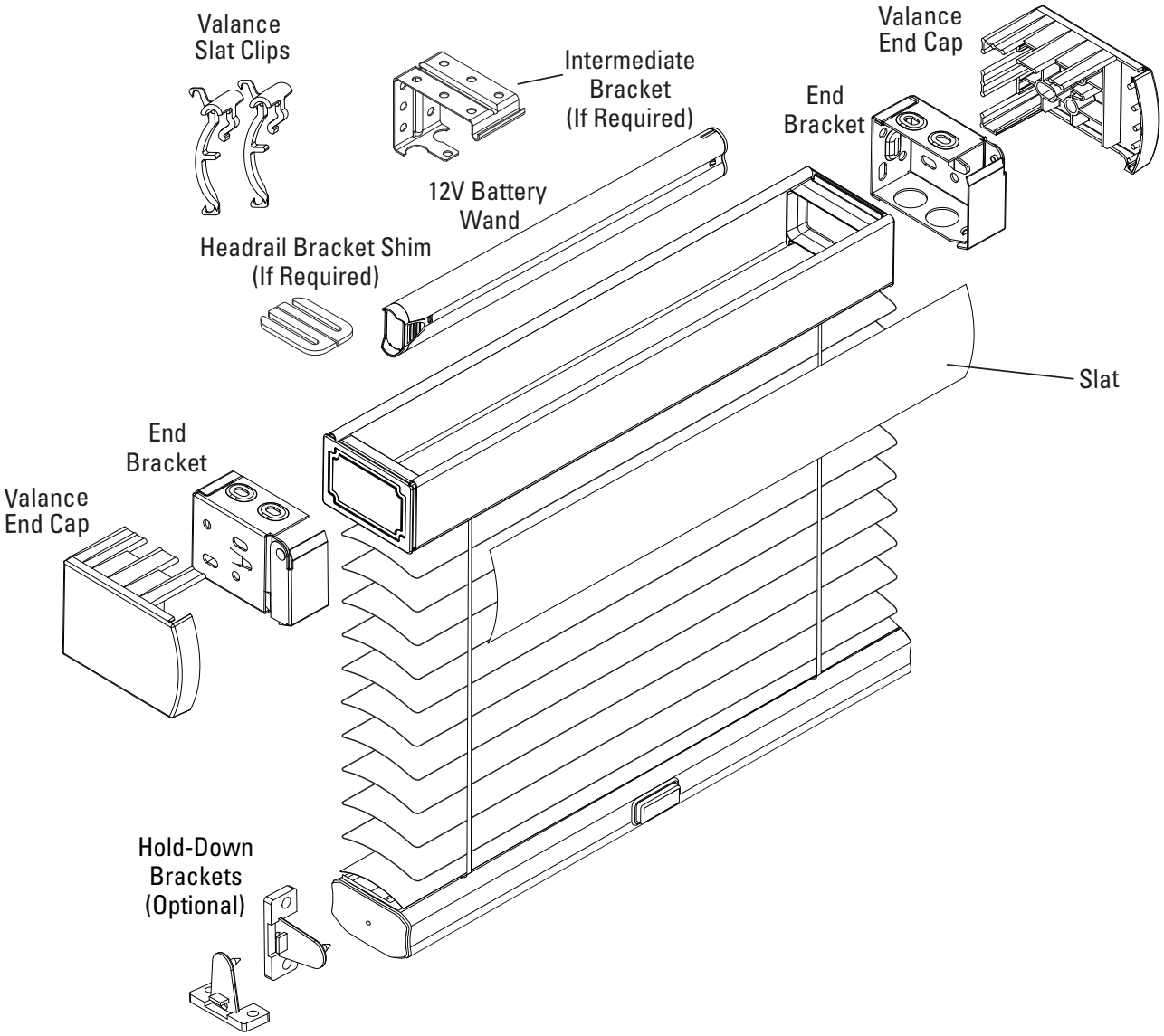

Size Standards

How to Use the Size Standards Charts

The Size Standards charts are designed to be a quick reference to size standards, price charts, and where to find further product specifications. Price charts are referenced by chart number next to the fabric style, and further product specifications are referenced by a link to the operating system. Additional information that may be needed is bulleted at the bottom of each chart.

Important: Blind dimensions must be equal to or less than the maximum dimensions (width, height and area) and equal to or greater than the minimum dimensions (width and height) to be within specification guidelines. Unless otherwise noted, all measurements reflect ordered dimensions.

SIZE STANDARDS	Cut-Outs	
	Bottom or Side	Headrail
1/2" DÉCOR® (PRICE CHART A1)		
Min. Width	18 1/2"	24 3/8"
Max. Width	120"	120"
Min. Height	6"	6"
Max. Height	84"	84"
Max. Area (sq. ft.)	70	70
1" CELEBRITY® (PRICE CHART B1)		
Min. Width	18 1/2"	24 3/8"
Max. Width	144"	144"
Min. Height	6"	6"
Max. Height	84"	84"
Max. Area (sq. ft.)	84	84
1" DÉCOR (PRICE CHART C1)		
Min. Width	18 1/2"	24 3/8"
Max. Width	144"	144"
Min. Height	6"	6"
Max. Height	84"	84"
Max. Area (sq. ft.)	84	84
2" MACRO (PRICE CHART D1)		
Min. Width	18 1/2"	22 1/4"
Max. Width	120"	120"
Min. Height	12"	12"
Max. Height	96"	96"
Max. Area (sq. ft.)	80	80

Notes

- Based on blind square footage limitations, the allowable width and height of the blind will vary.
- Cut-outs are not available with LiteRise® blinds.
- Headrail cut-outs are not available with SimpleLift™ with PowerView® Gen 3 Automation blinds.

Design Option Specifications

Size Standards

See "Cut-Outs" on page 31.

Exclusions

- Headrail cut-outs with PowerView® Gen 3 Automation
- LiteRise®
- Three-on-one headrail

Additional Information

- Height of cut-out is measured from the bottom of the blind to the top of the desired cut-out location.
- Based on blind square footage limitations, the allowable width and height of the blind will vary. Refer to price charts for guidance.
- When measuring for the area of the cut-out, consider the blind in the fully closed position to ensure that the cut-out portion is large enough.
- Single headrail cut-outs are available with the standard operating system only. The control must be on the opposite side of the cut-out.
- Top of cut-out raises to headrail.

Bottom Side Cut-Out
(Left, Right or Both)

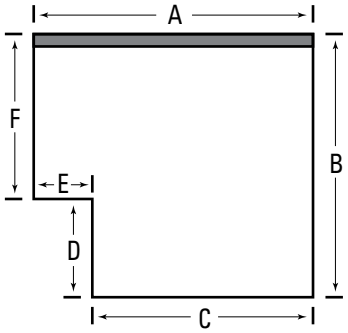

Measurement of C must be 6" or more
Measurement of E must be 2½" or less

Single Headrail Cut-Out
(Standard Blinds Only)

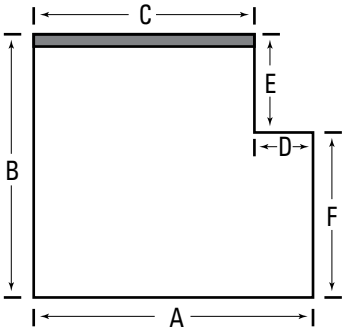

Measurement of D must be 4" or less

Headrail Cut-Out (Both Sides)

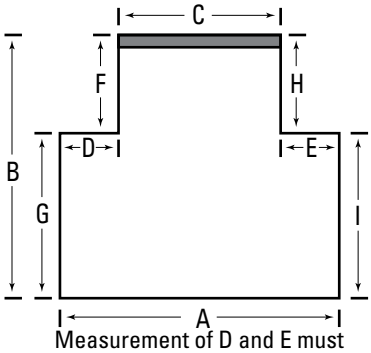

Measurement of D and E must be 1" or less

Side Cut-Out (Left, Right or Both)

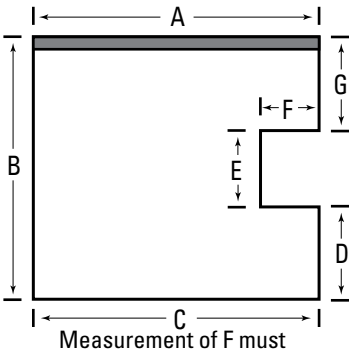

Measurement of F must be 3½" or less

Legend
= Location of Headrail
A - I = Measurements Needed

Design Option Specifications

Valance Matrix				
Headrail or Valance Type	**Valance Clip Type**	**Used on Blind Type**	**No Valance**	**Fully Recessed Mounting Depth**
Universal Contoured Headrail 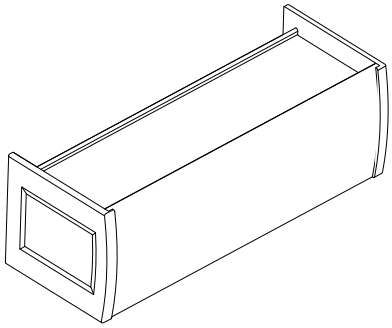	Requires no valance or valance clips.	1/2" Décor®	√	1 5/8"
		1" Décor	√	1 5/8"
Beveled Headrail 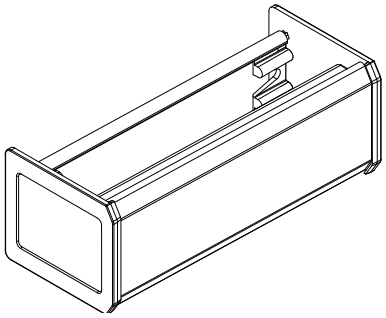	Requires no valance or valance clips.	1" Celebrity®	√	1 5/8"
Macro Valance 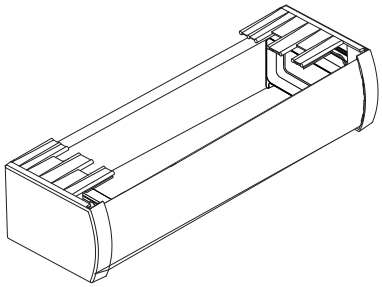	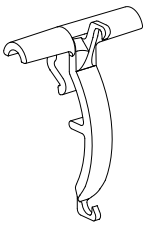	2" Macro	—	3 1/8"

Valances Explained

Overview

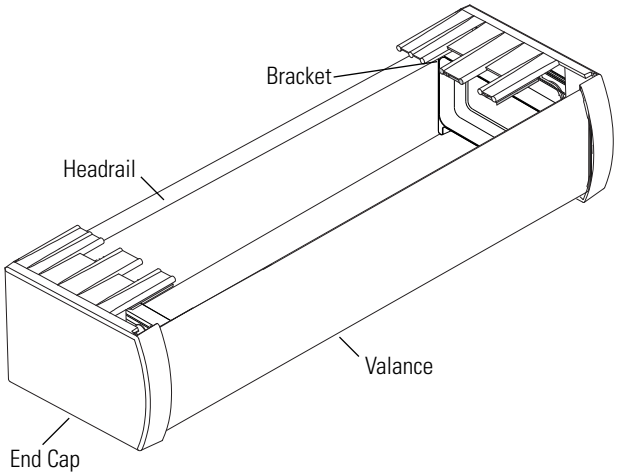

The mounting bracket slides all the way into the valance end cap prior to installation.

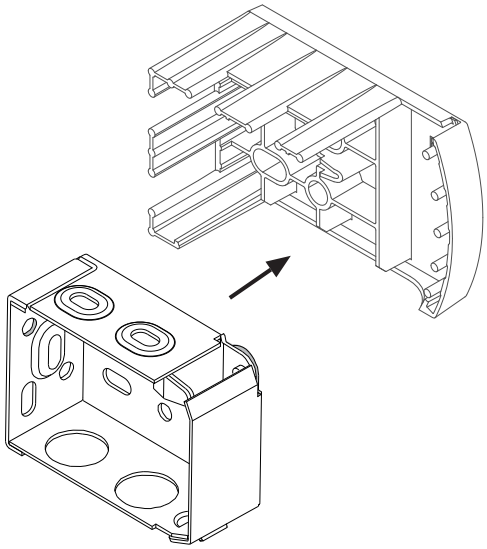

The valance slat is inserted into the grooves of each end cap.

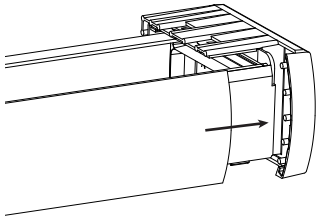

Inside Mount (IB)

- Blind is fully recessed within window opening.
- Valance slat width is 3/8" narrower than ordered blind width.

Top View

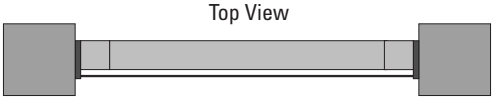

Partially Recessed

- Blind is partially recessed within window opening.
- Valance slat width is 3/8" narrower than ordered blind width.

Top View

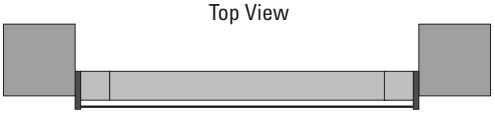

Outside Mount (OB)

- Blind is mounted outside of the window opening.
- Valance slat width is 1/8" wider than ordered blind width.

Top View

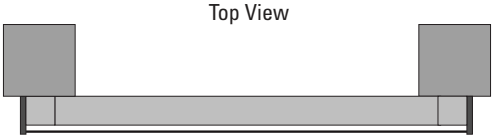

Legend:

- ■ = Valance
- □ = Headrail and Bracket
- ■ = Wall
- ■ = End Cap

Bottom Rails

Bottom Rail Dimensions			
Bottom Rail Type	**Used on System Type**	**Depth**	**Height**
1" Metal Bottom Rail 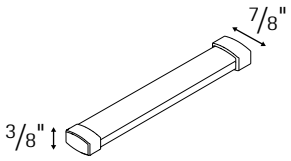	LiteRise®	7/8"	3/8"
2" Metal Bottom Rail 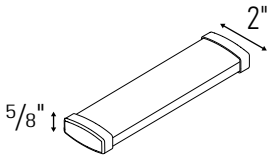	LiteRise	2"	5/8"
1/2" & 1" SimpleLift™ Aluminum Bottom Rail 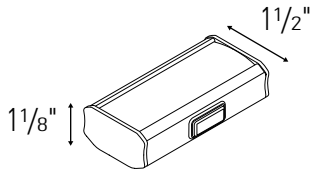	SimpleLift	1 1/2"	1 1/8"
2" SimpleLift Aluminum Bottom Rail 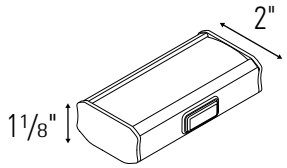	SimpleLift & SimpleLift with PowerView® Gen 3 Automation	2"	1 1/8"

Notes

- Due to variations in material, given depth and height may vary slightly.

Brackets

Installation Brackets				
½" & 1" SimpleLift			**1" LiteRise**	
Blind Width (FINISHED slat width)	**Number of Brackets Under 60 sq. ft.**	**Number of Brackets Over 60 sq. ft.**	**Blind Width (FINISHED slat width)**	**Quantity**
Up to 60"	2	3	Up to 60"	2
60 1/8" to 120"	3	4	60 1/8" to 96"	3
Over 120"	4	5		

Intermediate Support Brackets	
2"	
Blind Width (FINISHED slat width)	**Quantity**
47 1/8" to 96"	1

Additional Specifications

MODERN PRECIOUS METALS® ALUMINUM BLINDS

Ladders

Ladder Standards							
½" SimpleLift™		1" SimpleLift		1" LiteRise®		2"	
Blind Width (FINISHED slat width)	**Number of Ladders**	**Blind Width (FINISHED slat width)**	**Number of Ladders**	**Blind Width (FINISHED slat width)**	**Number of Ladders**	**Blind Width (FINISHED slat width)**	**Number of Ladders**
Up to 25"	2	Up to 36"	2	Up to 40"	2	Up to 46½"	2
25⅛" to 35"	3	36⅛" to 60"	3	40⅛" to 64"	3	46⅝" to 80½"	3
35⅛" to 48"	4	60⅛" to 84"	4	64⅛" to 88"	4	80⅝" to 114½"	4
48⅛" to 61"	5	84⅛" to 108"	5	88⅛" to 96"	5	114⅝" to 120"	5
61⅛" to 74"	6	108⅛" to 132"	6				
74⅛" to 87"	7	132⅛" to 144"	7				
87⅛" to 100"	8						
100⅛" to 120"	9						

Notes
- The same standards apply to decorative tapes.
- See the appropriate Size Standards section for operating system exact minimums and maximums.

Wands

Wand Length Standards			
½" & 1" Décor® and 2" Macro		1" Celebrity®	
Blind Height	**Wand Length**	**Blind Height**	**Wand Length**
6" to 40"	12"	6" to 40"	12"
40⅛" to 62"	20"	40⅛" to 56"	20"
62⅛" to 87"	30"	56⅛" to 69"	25"
87⅛" to 96"	40"	69⅛" to 81"	30"
		81⅛" to 84"	35"

Notes
- For ½" & 1" Décor® and 2" Macro blinds, wand lengths of 50", 60", 70", 78", 90", and 120" are also available.
- For 1" Celebrity® blinds, a wand length of 40", 50", and 60" are also available.

Stacking Heights

	Stacking Heights (Approx.)					
	LiteRise®		SimpleLift™		SimpleLift & SimpleLift with PowerView® Gen 3 Automation	
	1"	2"	½"	1"	2"	
Blind Height	Traditional Ladders		Traditional Ladders		Traditional Ladders	Decorative Tapes
36"	3"	2⅞"	3½"	3"	3⅛"	3⅜"
48"	3½"	3⅛"	4"	3½"	3⅜"	3⅝"
60"	4"	3¼"	4½"	4"	3⅝"	3⅞"
72"	4½"	3½"	5"	4½"	3¾"	4"
84"	5"	3⅝"	5½"	5"	4"	4¼"
96"	—	—	—	—	4⅛"	4½"

Notes
- Stacking heights include headrail and bottom rail.