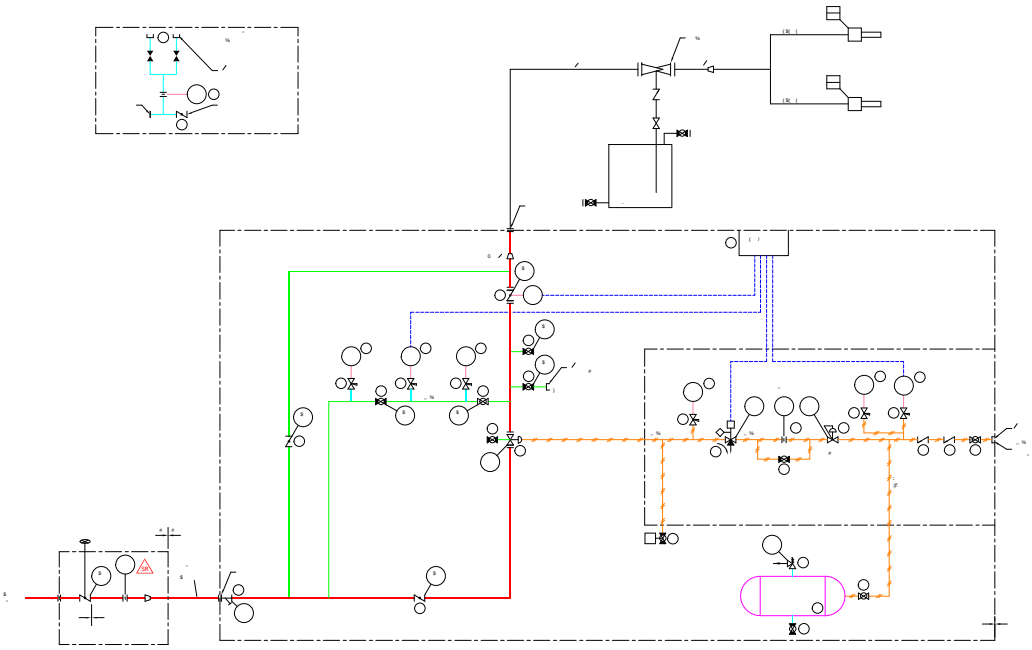

		#	