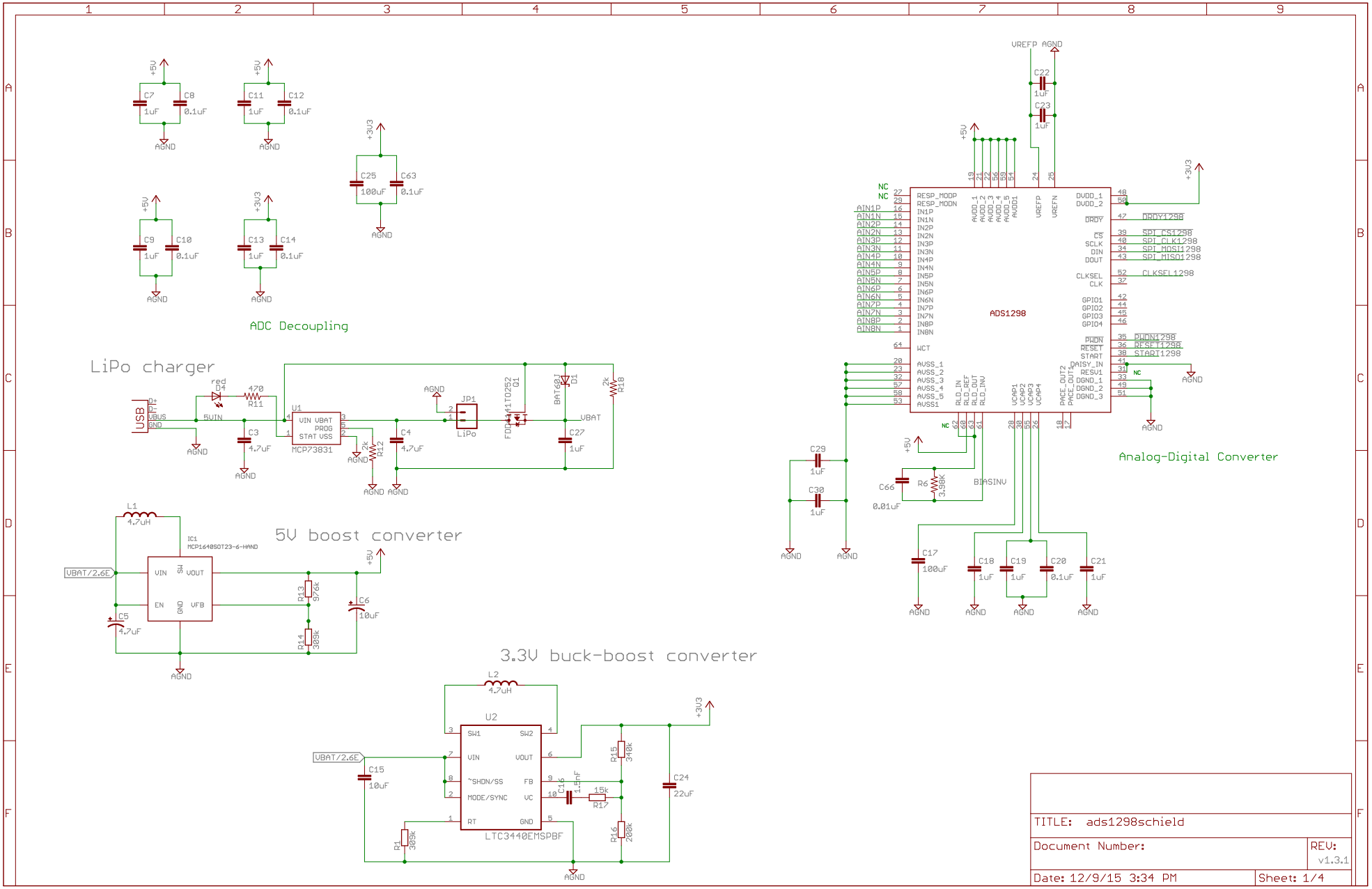
ADC Decoupling
LiPo charger
5V boost converter
3.3V buck-boost converter
Analog-Digital Converter
ADS1298
MCP73831
LTC3440EMSPBF
MCP1640SOT23-6-HAND
FDP4141TO252
USB
LiPo
VBAT
VBAT/2.6E
AGND
+5V
+3V3
VREFP
VREFN
BIASINV
TITLE: ads1298schield
Document Number:
REV: v1.3.1
Date: 12/9/15 3:34 PM
Sheet: 1/4

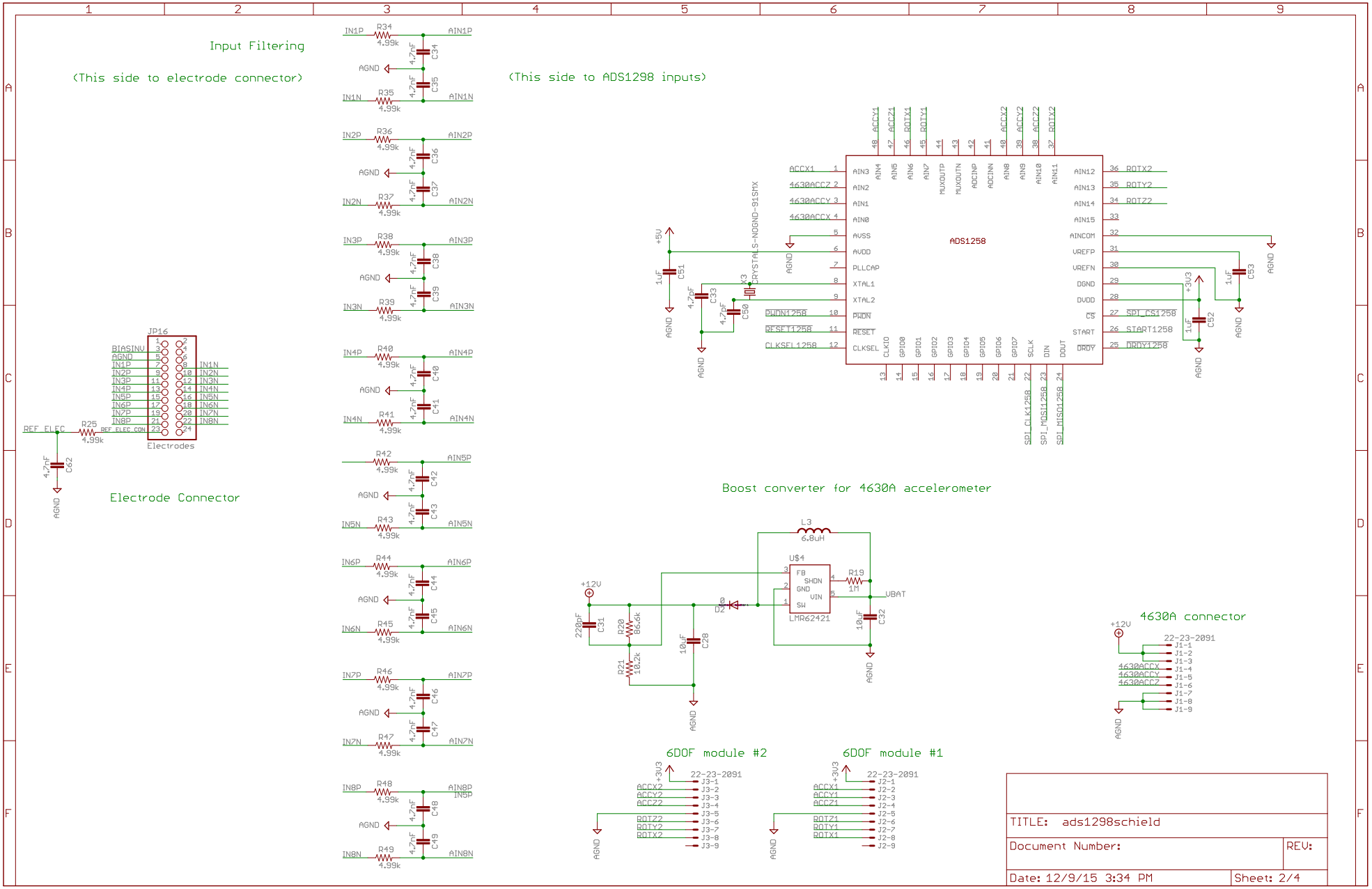
Input Filtering
(This side to electrode connector)
(This side to ADS1298 inputs)
ADS1258
Electrode Connector
JP16
Electrodes
Boost converter for 4630A accelerometer
LMR62421
4630A connector
6DOF module #2
6DOF module #1
TITLE: ads1298schield
Document Number:
REV:
Date: 12/9/15 3:34 PM
Sheet: 2/4

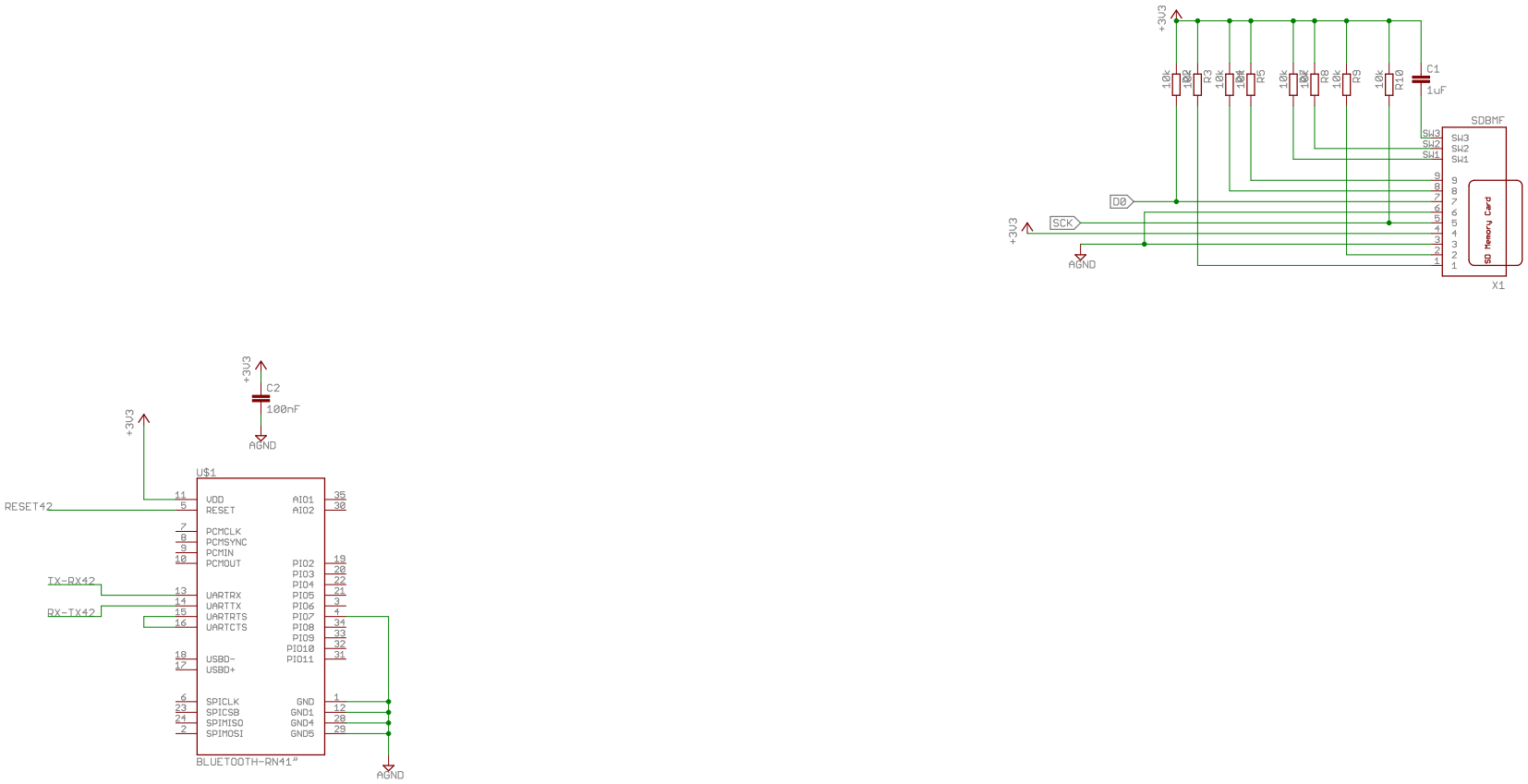

TITLE: ads1298schield	
Document Number:	REV:
Date: 12/9/15 3:34 PM	Sheet: 3/4

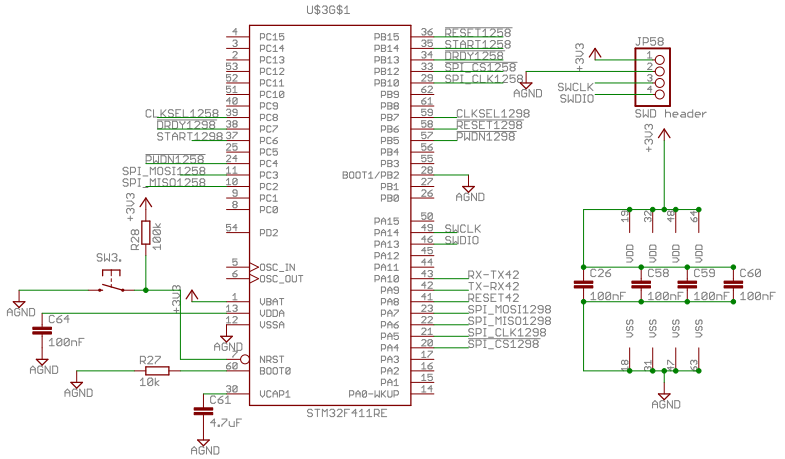

TITLE: ads1298schield

Document Number:

REV:

Date: 12/9/15 3:34 PM

Sheet: 4/4