THESIS PAPER

Krakenum Deterministic Economic Continuum

(K-DEC)

Author: Hendri Rahmat Hendrianto

2026

Statement of Originality

I declare that this manuscript is an original research draft and all external references are properly cited.

-Kraken_HR-

Abstract

This thesis proposes Krakenum Deterministic Economic Continuum (K-DEC) as a formal and operational model linking ledger finality with economic finality under transparent, preparedness-first blockchain engineering. The model is grounded in explicit architectural domain separation (chain ledger, wallet application, indexer, and governance-audit), policy-commitment traceability, and gate-based feature activation. The thesis argues that production reliability is improved when foundational policy objects and invariant checks are installed early and opened incrementally by evidence, rather than introduced late under launch pressure.

Table of Contents

Abstract 3
Table of Contents 4
Chapter 1. Introduction 1
1.0 Foundation-First Motivation for KVP 1
1.1 Deterministic finality interpretation 3
1.2 Policy commitment traceability 4
1.3 Continuum validator participation 8
1.4 Economic finality gap diagnostics 12
1.5 Supply-dynamics consistency 15
1.6 Cross-domain interoperability 19
1.7 Governance risk and mitigation 22
1.8 Operational observability framework 26
Chapter 2. Literature and Conceptual Background 29
2.1 Deterministic finality interpretation 29
2.2 Policy commitment traceability 31
2.3 Continuum validator participation 32
2.4 Economic finality gap diagnostics 33
2.5 Supply-dynamics consistency 34
2.6 Cross-domain interoperability 35
2.7 Governance risk and mitigation 36
2.8 Operational observability framework 37
Chapter 3. Problem Formulation 38
3.1 Deterministic finality interpretation 38
3.2 Policy commitment traceability 39
3.3 Continuum validator participation 40
3.4 Economic finality gap diagnostics 41
3.5 Supply-dynamics consistency 42
3.6 Cross-domain interoperability 43

3.7 Governance risk and mitigation....43
3.8 Operational observability framework....44
Chapter 4. Krakenum Theory (K-DEC) Formal Definition....45
4.0 K-DEC Axioms for Transparent Production Readiness....46
4.1 Deterministic finality interpretation....48
4.2 Policy commitment traceability....49
4.3 Continuum validator participation....49
4.4 Economic finality gap diagnostics....50
4.5 Supply-dynamics consistency....51
4.6 Cross-domain interoperability....51
4.7 Governance risk and mitigation....52
4.8 Operational observability framework....53
Chapter 5. Mathematical Formulation....53
5.1 Deterministic finality interpretation....54
5.2 Policy commitment traceability....55
5.3 Continuum validator participation....56
5.4 Economic finality gap diagnostics....56
5.5 Supply-dynamics consistency....57
5.6 Cross-domain interoperability....58
5.7 Governance risk and mitigation....59
5.8 Operational observability framework....60
Chapter 6. System Architecture Mapping....61
6.1 Deterministic finality interpretation....61
6.2 Policy commitment traceability....62
6.3 Continuum validator participation....63
6.4 Economic finality gap diagnostics....64
6.5 Supply-dynamics consistency....65
6.6 Cross-domain interoperability....66
6.7 Governance risk and mitigation....67
6.8 Operational observability framework....68
Chapter 7. Methodology....69

7.1 Deterministic finality interpretation 69
7.2 Policy commitment traceability 70
7.3 Continuum validator participation 71
7.4 Economic finality gap diagnostics 72
7.5 Supply-dynamics consistency 73
7.6 Cross-domain interoperability 74
7.7 Governance risk and mitigation 75
7.8 Operational observability framework 75
Chapter 8. Scenario-Based Evaluation 76
8.1 Deterministic finality interpretation 77
Scenario 8.1.1: Chain Reorganization Attack 77
Scenario 8.1.2: Economic Attack via Policy 77
8.2 Policy commitment traceability 78
Scenario 8.2.1: Silent Policy Change 78
Scenario 8.2.2: Historical Policy Reconstruction 79
8.3 Continuum validator participation 79
Scenario 8.3.1: Rich Get Richer Prevention 79
Scenario 8.3.2: Validator Cartel Formation 79
8.4 Economic finality gap diagnostics 80
Scenario 8.4.1: Fee Routing Failure 80
Scenario 8.4.2: Slow Supply Leak 80
8.5 Supply-dynamics consistency 81
Scenario 8.5.1: Mint Cap Violation Attempt 81
Scenario 8.5.2: Deterministic Replay Verification 81
8.6 Cross-domain interoperability 81
Scenario 8.6.1: Domain Failure Isolation 81
Scenario 8.6.2: Event Bus Latency Under Load 82
8.7 Governance risk and mitigation 82
Scenario 8.7.1: Vote Manipulation 82
Scenario 8.7.2: Implementation Divergence 82

8.8 Operational observability framework 83
Scenario 8.8.1: Multi-Component Incident 83
Scenario 8.8.2: Silent Performance Degradation 83
Chapter 9. Analysis and Discussion 84
9.1 Deterministic finality interpretation 84
9.2 Policy commitment traceability 85
9.3 Continuum validator participation 86
9.4 Economic finality gap diagnostics 87
9.5 Supply-dynamics consistency 88
9.6 Cross-domain interoperability 89
9.7 Governance risk and mitigation 90
9.8 Operational observability framework 91
Chapter 10. Conclusion and Future Work 92
10.1 Deterministic finality interpretation 92
10.2 Policy commitment traceability 93
10.3 Continuum validator participation 94
10.4 Economic finality gap diagnostics 95
10.5 Supply-dynamics consistency 96
10.6 Cross-domain interoperability 97
10.7 Governance risk and mitigation 98
10.8 Operational observability framework 99
10.9 Concluding Commitment for Open-Mainnet Readiness 100
References (IEEE Style) 102
Appendix A. Extended Notation and Definitions 103
Appendix B. Figure Portfolio 104
Appendix C. Extended Scenario Tables 105
Appendix D. Technical Propositions and Proof Sketches 111

Chapter 1. Introduction

This chapter focuses on research motivation and thesis positioning within the Krakenum Deterministic Economic Continuum framework. The objective is to provide a rigorous and reproducible discussion aligned with thesis-grade academic standards.

1.0 Foundation-First Motivation for KVP

KVP is initiated with a foundation-first doctrine: production reliability is treated as a function of early architectural honesty. In this doctrine, testnet is not a cosmetic launch layer but a controlled proving ground where protocol assumptions are intentionally stressed before irreversible public-value exposure in open mainnet.

The core hypothesis is that economic trust degradation in blockchain ecosystems is frequently preceded by hidden architectural debt, including placeholder payloads, unstable storage semantics, and delayed policy formalization. Therefore, KVP introduces a no-placeholder commitment in both frontend and backend surfaces for any path that claims real chain state.

A second principle is strict domain separation: DB-1 chain ledger for consensus-economic truth, DB-2 wallet application for identity/session, DB-3 indexer as rebuildable read model, and DB-4 governance-audit for institutional accountability. This separation is designed to reduce cross-domain ambiguity and to preserve post-incident explainability.

A third principle is gate-based opening. Features are prepared early at schema and policy levels, then opened incrementally (prepared -> disabled -> internal -> open-testnet -> mainnet) based on

evidence. This avoids redesign under deadline pressure and repositions mainnet launch as controlled activation, not structural rewrite.

1.1 Deterministic finality interpretation

This section analyzes research motivation and thesis positioning from the perspective of Deterministic finality interpretation. In the K-DEC framework, each protocol transition is evaluated not only as a state-ordering event but also as a policy-constrained economic event. The implication is that correctness must be interpreted in a dual space: consensus-valid transitions and economically coherent transitions. From an engineering standpoint, this dual interpretation reduces ambiguity in post-incident diagnosis, because the protocol retains commitment-linked evidence of rule activation and value distribution. From an institutional standpoint, the same structure supports interoperability between technical operations and governance accountability, thereby reducing reconciliation overhead.

This section analyzes protocol lifecycle integrity from the perspective of formal verification framing. In the K-DEC framework, each protocol transition is evaluated not only as a state-ordering event but also as a policy-constrained economic event. The implication is that correctness must be interpreted in a dual space: consensus-valid transitions and economically coherent transitions. From an engineering standpoint, this dual interpretation reduces ambiguity in post-incident diagnosis, because the protocol retains commitment-linked evidence of rule activation and value distribution. From an institutional standpoint, the same structure supports interoperability between technical operations and governance accountability, thereby reducing reconciliation overhead.

This section analyzes institutional adoption pathway from the perspective of governance and compliance compatibility. In the K-DEC framework, each protocol transition is evaluated not only as a state-ordering event but also as a policy-constrained economic event. The implication is that correctness must be interpreted in a dual space: consensus-valid transitions and economically coherent transitions. From an engineering standpoint, this dual interpretation reduces ambiguity in post-incident diagnosis, because the protocol retains commitment-linked evidence of rule activation and value distribution. From an institutional standpoint, the same structure supports interoperability between technical operations and governance accountability, thereby reducing reconciliation overhead.

Equation anchor used in this subsection:

$$F_K(t)=F_L(t)*F_E(t),$$

$$EFG(t)=|F_L(t)-F_E(t)|,$$

$$KPI_t=H(Policy_t||Params_t||Epoch_t), \text{ and}$$

$$S[t+1]=S[t]-Sum(Burn[t])+Mint[t]-Leak[t].$$

The role of these equations is to map protocol observability to mathematically constrained economic behavior.

1.2 Policy commitment traceability

This section analyzes research motivation and thesis positioning from the perspective of policy commitment traceability. In the K-DEC framework, policy commitment traceability ensures that economic rules governing token supply, fee distribution, validator rewards, and protocol upgrades are not only documented but also

cryptographically linked to chain state progression. The implication is that any future dispute about economic policy activation can be resolved by replaying policy-commitment evidence from canonical records, rather than relying on fragmented documentation or institutional memory. From an engineering standpoint, policy commitment traceability provides an automated audit trail that reduces manual reconciliation overhead and eliminates ambiguity about which policy version was active at which epoch. From an institutional standpoint, the same structure supports compliance by demonstrating that economic transitions followed declared rules, thereby reducing legal exposure related to unauthorized token issuance or fee misallocation.

The K-DEC framework defines policy commitment as a cryptographically signed declaration of economic parameters that becomes effective at a specified epoch boundary. Unlike informal whitepaper statements, policy commitments in K-DEC are versioned objects stored in the canonical ledger (DB-1) with hash references that map to external policy documents. This design ensures that policy intent is traceable to on-chain state, enabling both technical verification and governance accountability. The primary mechanism for policy commitment traceability is the policy hash function, which generates a unique identifier for each policy configuration.

Policy commitment in K-DEC serves multiple functions in the protocol lifecycle. First, it provides cryptographic proof of which economic rules were active at any given time, enabling deterministic replay of historical state transitions. Second, it creates an immutable record of policy changes that cannot be disputed or retroactively modified. Third, it supports automated enforcement by embedding

policy-constraint checks directly into the state transition engine. Fourth, it enables governance oversight by providing evidence of policy activation aligned with documented procedures. These functions collectively reduce the likelihood of policy ambiguity that frequently leads to ecosystem disputes in other blockchain implementations.

The technical implementation of policy commitment traceability in K-DEC involves three primary components: policy objects, policy hashes, and policy activation gates. Policy objects are structured data representations of economic parameters including supply caps, fee ratios, reward distributions, and slashing conditions. Policy hashes are cryptographic digests generated from policy objects using a deterministic hash function, ensuring that any modification to policy results in a different hash value. Policy activation gates are protocol-enforced checkpoints that prevent new policy objects from becoming active until specific conditions are met, such as governance approval or elapsed time periods. Together, these components create a policy commitment system that is both technically rigorous and operationally transparent.

Policy commitment traceability addresses several critical problems in blockchain economics. First, it prevents silent policy drift, where economic parameters change without explicit announcement or documentation. Second, it enables post-incident analysis by providing clear evidence of which policy was active during any given period. Third, it supports automated compliance by enabling smart contracts to reference and enforce active policy parameters directly. Fourth, it reduces governance disputes by providing objective evidence of policy decisions and their outcomes. These

benefits are particularly relevant for institutional adoption, where compliance requirements demand clear audit trails and verifiable economic control mechanisms.

The relationship between policy commitment traceability and determinant finality interpretation is complementary. Deterministic finality ensures that technical state transitions are correct and irreversible, while policy commitment traceability ensures that economic policies governing those transitions are disclosed and immutable. Together, they provide a dual guarantee of protocol correctness: the chain state is final (deterministic finality) and the economic rules were properly authorized (policy commitment traceability). This dual guarantee distinguishes K-DEC from alternative frameworks that treat economic policy as peripheral to consensus logic.

In operational terms, policy commitment traceability requires several supporting infrastructure components. These include policy versioning systems that track policy evolution over time, governance integration interfaces that connect on-chain policy decisions with off-chain approval processes, monitoring tools that detect policy activation and changes, and replay capabilities that can reconstruct historical state based on policy-commitment evidence. Each component contributes to the overall observability of policy transitions, enabling both proactive management and retrospective analysis.

The section concludes by recognizing that policy commitment traceability is not merely a technical feature but a governance discipline. By requiring explicit policy disclosure and cryptographic commitment, K-DEC enforces a transparency-first

approach to economic governance that supports long-term ecosystem trust. This approach recognizes that blockchain systems operate in adversarial environments where economic policy ambiguity creates exploitation opportunities. Policy commitment traceability eliminates those opportunities by ensuring that economic rules are always visible, verifiable, and enforceable.

1.3 Continuum validator participation

The relationship between policy commitment traceability and determinant finality interpretation is complementary. Deterministic finality ensures that technical state transitions are correct and irreversible, while policy commitment traceability ensures that economic policies governing those transitions are disclosed and immutable. Together, they provide a dual guarantee of protocol correctness: the chain state is final (deterministic finality) and the economic rules were properly authorized (policy commitment traceability). This dual guarantee distinguishes K-DEC from alternative frameworks that treat economic policy as peripheral to consensus logic.

In operational terms, policy commitment traceability requires several supporting infrastructure components. These include policy versioning systems that track policy evolution over time, governance integration interfaces that connect on-chain policy decisions with off-chain approval processes, monitoring tools that detect policy activation and changes, and replay capabilities that can reconstruct historical state based on policy-commitment evidence. Each component contributes to the overall observability of policy transitions, enabling both proactive management and retrospective analysis.

This section analyzes research motivation and thesis positioning from the perspective of continuum validator participation. In the K-DEC framework, validator participation is interpreted not merely as a technical requirement for block production but as an economic contribution measure that influences token reward distribution, slashing risk, and governance weight. The implication is that validator quality must be measured over time through accumulated contribution metrics, rather than through static stake snapshots. From an engineering standpoint, continuum participation provides a quantitative basis for reward allocation that rewards consistent performance. From an institutional standpoint, the same structure supports governance by aligning validator incentives with network health objectives.

The concept of continuum validator participation extends traditional Proof of Stake (PoS) models by introducing time-integrated contribution metrics. Standard PoS systems allocate rewards based on stake quantity at a given moment, which creates incentives for large holders but does not necessarily reward consistent participation. In contrast, K-DEC measures validator contribution as a function of time, where validators who maintain consistent uptime, produce blocks reliably, and participate in governance earn higher weight in reward distribution. This approach is particularly relevant for proof-of-stake systems where validator diversity and reliability are critical to network security.

The mathematical formulation of continuum validator participation is expressed through the weight function: `Weight_i(T) = integral(Stake_i(t) x phi(TxRate(t)))dt`, evaluated over time horizon T. This equation integrates both stake quantity and

transaction processing rate, creating a composite measure that rewards validators who process high volumes while maintaining stake. The phi function introduces a multiplicative factor that increases reward weight for validators processing above-average transaction volumes, thereby incentivizing capacity investment and operational efficiency.

Continuum validator participation addresses several practical challenges in proof-of-stake systems. First, it prevents stake quantity alone from determining rewards, which reduces the advantage of large stakeholders who may be passive. Second, it incentivizes operational excellence by rewarding validators who maintain high uptime and process transactions efficiently. Third, it supports network security by ensuring that validators have skin-in-the-game through time-integrated stake commitment rather than momentary snapshots. Fourth, it creates a more predictable reward curve that enables validators to plan operations and invest in infrastructure. These benefits are particularly relevant for network security where validator diversity and operational reliability are essential to consensus integrity.

The technical implementation of continuum validator participation requires several supporting mechanisms: stake locking mechanisms that prevent rapid stake movement, contribution tracking systems that measure validator performance over time, reward calculation engines that apply time-integrated metrics, and governance interfaces that weight validator votes based on accumulated contribution. Each mechanism contributes to the overall incentive structure that promotes long-term validator commitment rather than short-term stake accumulation.

The relationship between continuum validator participation and deterministic finality is complementary. Validator participation directly influences block production and transaction finality, where validators with higher contribution weights have greater influence over finality decisions. This creates a feedback loop where expected contribution influences current authority, which influences finality outcomes, which influences reward distribution. Understanding this loop is essential for analysis of consensus security and economic incentive alignment.

In operational terms, continuum validator participation requires careful design to balance competing objectives. Too much weight on historical participation may disadvantage new validators, while too little weight may reduce the incentive for consistent performance. The phi function provides a tunable parameter that enables governance to adjust the balance based on network objectives and competitive dynamics. Additionally, the time horizon T must be long enough to smooth short-term fluctuations but short enough to maintain accurate measurement of current capability.

The section concludes by recognizing that continuum validator participation represents a fundamental departure from stake-quantity-based reward models. By introducing time-integrated contribution metrics, K-DEC creates incentives for operational excellence that align validator interests with network health objectives. This approach is particularly relevant for proof-of-stake systems seeking to balance decentralization with operational reliability.

1.4 Economic finality gap diagnostics

The relationship between continuum validator participation and deterministic finality is complementary. Validator participation directly influences block production and transaction finality, where validators with higher contribution weights have greater influence over finality decisions. This creates a feedback loop where expected contribution influences current authority, which influences finality outcomes, which influences reward distribution. Understanding this loop is essential for analysis of consensus security and economic incentive alignment.

In operational terms, continuum validator participation requires careful design to balance competing objectives. Too much weight on historical participation may disadvantage new validators, while too little weight may reduce the incentive for consistent performance. The phi function provides a tunable parameter that enables governance to adjust the balance based on network objectives and competitive dynamics. Additionally, the time horizon T must be long enough to smooth short-term fluctuations but short enough to maintain accurate measurement of current capability.

This section analyzes research motivation and thesis positioning from the perspective of economic finality gap diagnostics. In the K-DEC framework, economic finality gap (EFG) diagnostics provides a systematic method for measuring the divergence between ledger finality (F_L) and economic finality (F_E), enabling early detection of protocol anomalies that might otherwise remain hidden until production failure. The implication is that ledger correctness alone is insufficient for production readiness; economic coherence must also be measured, tracked, and maintained. From an engineering

standpoint, EFG diagnostics provides an early warning system that identifies protocol stress before irreversible economic damage occurs. From an institutional standpoint, the same structure supports compliance by demonstrating that economic transactions follow declared finality rules.

The concept of economic finality gap extends traditional finality analysis by recognizing that technical finality (block confirmation) and economic finality (balance finality) may diverge under certain conditions. In conventional blockchains, once a block is confirmed, balances are considered final. However, this assumption breaks down when economic policies allow post-confirmation modifications through slashing, governance reversals, or policy changes that retroactively affect confirmed transactions. EFG diagnostics quantifies this potential divergence through the gap function: $EFG(t) = |F_L(t) - F_E(t)|$, where both F_L and F_E are expressed as confidence values in the range [0,1].

The mathematical formulation of economic finality gap requires careful definition of both F_L and F_E components. Ledger finality $F_L(t)$ measures technical finality based on consensus mechanisms such as block depth, validator signatures, or checkpoint confirmation. Economic finality $F_E(t)$ measures economic finality based on factors including policy stability, supply conservation, fee routing correctness, and reward distribution integrity. The gap between these measures indicates potential areas of economic vulnerability where technical finality may not guarantee economic finality.

EFG diagnostics identifies several categories of protocol anomalies. First, policy instability where economic policies change

frequently, creating uncertainty about future state. Second, supply accounting errors where minted or burned tokens do not match declared policy, indicating potential protocol bugs or exploitation. Third, fee routing failures where collected fees are not distributed according to policy percentages, indicating operational deviations. Fourth, reward calculation errors where validator rewards do not align with declared contribution metrics, indicating incentive misalignment. Each category represents a distinct vulnerability that EFG diagnostics can detect before production impact.

The diagnostic process involves three primary components: measurement, analysis, and response. Measurement involves continuous monitoring of F_L, F_E, and their difference at each epoch boundary. Analysis involves identifying patterns and trends in gap values that may indicate emerging problems. Response involves triggering alerts and automated interventions when EFG exceeds governance-defined thresholds. This three-component process creates a diagnostic loop that continuously measures, analyzes, and responds to economic finality conditions.

The relationship between EFG diagnostics and deterministic finality is fundamental to the K-DEC framework. Deterministic finality $F_K(t) = F_L(t) \times F_E(t)$ represents the combined confidence where both ledger and economic finality must be satisfied. When EFG is zero, F_L and F_E are perfectly aligned and F_K equals F_L squared. When EFG increases, F_K decreases proportionally, reflecting reduced confidence in protocol correctness. This relationship quantifies the intuitive notion that economic uncertainty undermines technical finality.

In operational terms, EFG diagnostics requires several supporting tools and systems. These include finality confidence calculators that continuously compute F_L and F_E values, gap trending analysis tools that identify emerging patterns, alert systems that trigger when EFG exceeds thresholds, and dashboard visualizations that enable operators to monitor economic health in real-time. Each component contributes to the overall diagnostic capability that enables proactive management of economic finality.

The section concludes by recognizing that economic finality gap diagnostics represents a fundamental advancement in protocol monitoring. By quantifying the gap between technical and economic finality, K-DEC enables operators to identify and respond to economic vulnerabilities before they become production failures. This diagnostic approach is particularly relevant for institutional adoption, where compliance requirements demand demonstrable economic control and auditability.

1.5 Supply-dynamics consistency

The relationship between EFG diagnostics and deterministic finality is fundamental to the K-DEC framework. Deterministic finality F_K(t) = F_L(t) x F_E(t) represents the combined confidence where both ledger and economic finality must be satisfied. When EFG is zero, F_L and F_E are perfectly aligned and F_K equals F_L squared. When EFG increases, F_K decreases proportionally, reflecting reduced confidence in protocol correctness. This relationship quantifies the intuitive notion that economic uncertainty undermines technical finality.

In operational terms, EFG diagnostics requires several supporting tools and systems. These include finality confidence calculators

that continuously compute F_L and F_E values, gap trending analysis tools that identify emerging patterns, alert systems that trigger when EFG exceeds thresholds, and dashboard visualizations that enable operators to monitor economic health in real-time. Each component contributes to the overall diagnostic capability that enables proactive management of economic finality.

The section concludes by recognizing that economic finality gap diagnostics represents a fundamental advancement in protocol monitoring. By quantifying the gap between technical and economic finality, K-DEC enables operators to identify and respond to economic vulnerabilities before they become production failures. This diagnostic approach is particularly relevant for institutional adoption, where compliance requirements demand demonstrable economic control and auditability.

This section analyzes research motivation and thesis positioning from the perspective of supply-dynamics consistency. In the K-DEC framework, supply-dynamics consistency ensures that token supply changes (minted tokens, burned tokens, and leakage) follow mathematically defined rules that can be verified through deterministic replay. The implication is that supply changes are not arbitrary but follow explicit policy-controlled formulas that preserve supply conservation principles. From an engineering standpoint, supply-dynamics consistency provides deterministic accounting that enables independent verification of supply changes. From an institutional standpoint, the same structure supports compliance by demonstrating that token issuance follows declared rules without unauthorized expansion.

The mathematical formulation of supply dynamics is expressed through the state transition equation: S[t+1] = S[t] - Sum(Burn[t]) + Mint[t] - Leak[t]. This equation expresses supply at epoch t+1 as a function of supply at epoch t minus burned tokens plus minted tokens minus leakage. Each component is policy-controlled, meaning that the rates and conditions for burning, minting, and leakage are defined in policy objects that are committed to the canonical ledger.

Supply-dynamics consistency addresses several critical problems in blockchain tokenomics. First, it prevents unauthorized token minting by requiring all minting operations to follow policy-controlled rules that are recorded in the ledger. Second, it ensures supply conservation by requiring burned tokens to be deducted from supply according to predictable formulas. Third, it enables auditability by allowing independent verification of supply changes through deterministic replay. Fourth, it supports compliance by providing cryptographic evidence that supply changes followed declared policies. These benefits are particularly relevant for tokens with economic value where supply manipulation represents a fundamental breach of trust.

The technical implementation of supply-dynamics consistency requires several supporting mechanisms. First, policy objects must specify mint caps, burn ratios, and leakage thresholds that are cryptographically committed to the ledger. Second, the state transition engine must enforce these policy constraints at each block production, rejecting any transaction that would violate supply dynamics. Third, supply tracking systems must maintain running totals of minted, burned, and leaked tokens for audit

purposes. Fourth, replay capabilities must enable independent verification of supply changes by reconstructing historical state from genesis. Together, these mechanisms create a supply tracking system that is both technically rigorous and operationally transparent.

The relationship between supply-dynamics consistency and policy commitment traceability is fundamental. Policy commitment traceability ensures that economic rules are disclosed and immutable, while supply-dynamics consistency ensures that those rules are followed in practice. The supply transition equation S[t+1] = S[t] - Sum(Burn[t]) + Mint[t] - Leak[t] is the operational expression of policy commitments related to token supply. Without policy commitment traceability, supply-dynamics would lack the foundation of disclosed rules. Without supply-dynamics consistency, policy commitments would lack operational enforcement. Together, they create a supply management system that is both transparent and enforceable.

In operational terms, supply-dynamics consistency requires careful design to balance competing objectives. Too restrictive supply dynamics may limit token utility, while too loose supply dynamics may enable unauthorized manipulation. The policy objects provide governance-controlled parameters that enable adjustment based on network objectives and competitive dynamics. Additionally, the leak term addresses operational realities where some supply may be lost to operational inefficiencies, bugs, or adversarial activities, acknowledging that perfect supply accounting is impractical in dynamic environments.

The section concludes by recognizing that supply-dynamics consistency represents a foundational element of economic integrity in blockchain systems. By ensuring that supply changes follow disclosed and verifiable rules, K-DEC creates tokenomics that can withstand institutional scrutiny. This approach is particularly relevant for tokens seeking institutional adoption, where supply integrity is a fundamental requirement for sustainable economic value.

1.6 Cross-domain interoperability

The relationship between supply-dynamics consistency and policy commitment traceability is fundamental. Policy commitment traceability ensures that economic rules are disclosed and immutable, while supply-dynamics consistency ensures that those rules are followed in practice. The supply transition equation `S[t+1] = S[t] - Sum(Burn[t]) + Mint[t] - Leak[t]` is the operational expression of policy commitments related to token supply. Without policy commitment traceability, supply-dynamics would lack the foundation of disclosed rules. Without supply-dynamics consistency, policy commitments would lack operational enforcement. Together, they create a supply management system that is both transparent and enforceable.

In operational terms, supply-dynamics consistency requires careful design to balance competing objectives. Too restrictive supply dynamics may limit token utility, while too loose supply dynamics may enable unauthorized manipulation. The policy objects provide governance-controlled parameters that enable adjustment based on network objectives and competitive dynamics. Additionally, the leak term addresses operational realities where some supply may be lost

to operational inefficiencies, bugs, or adversarial activities, acknowledging that perfect supply accounting is impractical in dynamic environments.

The section concludes by recognizing that supply-dynamics consistency represents a foundational element of economic integrity in blockchain systems. By ensuring that supply changes follow disclosed and verifiable rules, K-DEC creates tokenomics that can withstand institutional scrutiny. This approach is particularly relevant for tokens seeking institutional adoption, where supply integrity is a fundamental requirement for sustainable economic value.

This section analyzes research motivation and thesis positioning from the perspective of cross-domain interoperability. In the K-DEC framework, cross-domain interoperability addresses the challenge of maintaining coherent state across the four bounded contexts (DB-1 chain ledger, DB-2 wallet application, DB-3 indexer, and DB-4 governance-audit) without introducing ambiguity or inconsistency. The implication is that domain separation must not become domain isolation; information flow between domains must be explicit, traceable, and verifiable. From an engineering standpoint, cross-domain interoperability enables modular development where different teams can work on different domains without constant synchronization. From an institutional standpoint, the same structure supports compliance by maintaining clear audit trails across domain boundaries.

The technical implementation of cross-domain interoperability in K-DEC is based on a publish-subscribe model where domains publish events that other domains can subscribe to. When a transaction is

finalized in the chain ledger (DB-1), an event is published that wallet applications (DB-2), indexers (DB-3), and governance systems (DB-4) can subscribe to. Each subscribing domain maintains its own local state, but that state can be traced back to canonical ledger records. This design ensures that while domains are operationally separated, they remain semantically coherent.

Cross-domain interoperability addresses several practical challenges in blockchain architecture. First, it enables independent scaling where different domains can handle different load characteristics without affecting each other. Second, it supports fault isolation where failures in one domain do not cascade to others. Third, it enables governance separation where governance decisions (DB-4) can be made independently from transaction processing (DB-1). Fourth, it facilitates compliance by maintaining clear boundaries between user identity data, economic data, and governance data. These benefits are particularly relevant for enterprise deployments where regulatory requirements demand clear data boundaries.

The relationship between cross-domain interoperability and domain separation (Axiom T3) is fundamental. Axiom T3 states that identity/session state must not be conflated with economic consensus state, establishing the principle of domain separation. Cross-domain interoperability establishes the mechanisms for domain communication within that separation framework. Without domain separation, cross-domain interoperability would be meaningless since all data would be in a single domain. Without cross-domain interoperability, domain separation would lead to domain isolation where data could not flow between contexts. Together, they create

a separation-with-communication model that balances isolation benefits with interoperability requirements.

In operational terms, cross-domain interoperability requires several supporting mechanisms: event publishing systems that notify domains of state changes, event subscription systems that enable domains to receive relevant notifications, state synchronization systems that maintain coherent cross-domain views, and audit trail systems that enable verification of cross-domain data flow. Each mechanism contributes to the overall interoperability capability that enables modular but coherent system operation.

The section concludes by recognizing that cross-domain interoperability represents a practical advancement in blockchain architecture. By enabling explicit communication between operationally separated domains, K-DEC achieves both the fault isolation and scaling benefits of domain separation while maintaining the data coherence required for comprehensive auditing. This approach is particularly relevant for enterprise deployments where regulatory requirements demand clear data boundaries but operational efficiency requires data flow.

1.7 Governance risk and mitigation

The relationship between cross-domain interoperability and domain separation (Axiom T3) is fundamental. Axiom T3 states that identity/session state must not be conflated with economic consensus state, establishing the principle of domain separation. Cross-domain interoperability establishes the mechanisms for domain communication within that separation framework. Without domain separation, cross-domain interoperability would be meaningless since all data would be in a single domain. Without cross-domain

interoperability, domain separation would lead to domain isolation where data could not flow between contexts. Together, they create a separation-with-communication model that balances isolation benefits with interoperability requirements.

In operational terms, cross-domain interoperability requires several supporting mechanisms: event publishing systems that notify domains of state changes, event subscription systems that enable domains to receive relevant notifications, state synchronization systems that maintain coherent cross-domain views, and audit trail systems that enable verification of cross-domain data flow. Each mechanism contributes to the overall interoperability capability that enables modular but coherent system operation.

The section concludes by recognizing that cross-domain interoperability represents a practical advancement in blockchain architecture. By enabling explicit communication between operationally separated domains, K-DEC achieves both the fault isolation and scaling benefits of domain separation while maintaining the data coherence required for comprehensive auditing. This approach is particularly relevant for enterprise deployments where regulatory requirements demand clear data boundaries but operational efficiency requires data flow.

This section analyzes research motivation and thesis positioning from the perspective of governance risk and mitigation. In the K-DEC framework, governance risk encompasses the possibility that policy decisions may be made without proper authorization, that policy changes may be implemented without appropriate evidence, or that governance processes may be Manipulated for personal gain. The implication is that governance must be treated as a first-order

security concern rather than a peripheral administrative function. From an engineering standpoint, governance risk and mitigation provides systematic methods for reducing the probability of governance failures that could undermine protocol integrity. From an institutional standpoint, the same structure supports compliance by demonstrating that governance processes follow declared procedures and are subject to appropriate oversight.

Governance risks in blockchain systems take several forms. First, there is policy capture risk where a small group of validators or token holders can control governance decisions without broader community consent. Second, there is information asymmetry risk where governance participants may have access to information not available to other stakeholders, creating advantages for insiders. Third, there is proposal manipulation risk where governance proposals may be structured to mislead voters or to pass under false pretenses. Fourth, there is implementation risk where approved governance decisions may not be implemented as originally specified. Each represents a distinct vulnerability that can undermine trust in the governance process.

The K-DEC framework addresses governance risks through multiple mechanisms aligned with the K-DEC axioms and operational frameworks. First, policy commitment traceability (Axiom T4) ensures that economic policies are disclosed and committed before activation, preventing silent policy drift. Second, gate-based activation (Axiom T5) ensures that feature openings follow evidence-based procedures rather than arbitrary timelines. Third, policy integrity hashing (KPI_t) ensures that policy changes are cryptographically linked to their approval. Fourth, the governance-audit domain (DB-

4) maintains records of all governance decisions and their implementations. Together, these mechanisms create a governance framework where decisions are transparent, traceable, and accountable.

In operational terms, governance risk mitigation requires several supporting systems: proposal review processes that examine the technical and economic implications of proposed changes, voting rights management systems that ensure voting power is allocated fairly, implementation verification systems that confirm approved proposals are implemented correctly, and audit trail systems that maintain records of the entire governance process. Each system contributes to the overall governance integrity that enables legitimate decision-making while preventing manipulation.

The relationship between governance risk and policy commitment traceability is fundamental. Policy commitment traceability ensures that governance decisions are recorded in a tamper-evident format, enabling retrospective analysis of whether decisions followed proper procedures. Without policy commitment traceability, governance records could be modified after the fact to conceal irregularities. With policy commitment traceability, governance decisions are cryptographically linked to their outcomes, creating strong disincentives for manipulation.

The section concludes by recognizing that governance risk and mitigation represents a critical but often overlooked aspect of blockchain protocol design. By treating governance as a first-order security concern, K-DEC creates mechanisms that enable legitimate governance while preventing common attack vectors. This approach is

particularly relevant for institutional adoption, where governance integrity is essential to regulatory compliance.

1.8 Operational observability framework

In operational terms, governance risk mitigation requires several supporting systems: proposal review processes that examine the technical and economic implications of proposed changes, voting rights management systems that ensure voting power is allocated fairly, implementation verification systems that confirm approved proposals are implemented correctly, and audit trail systems that maintain records of the entire governance process. Each system contributes to the overall governance integrity that enables legitimate decision-making while preventing manipulation.

The relationship between governance risk and policy commitment traceability is fundamental. Policy commitment traceability ensures that governance decisions are recorded in a tamper-evident format, enabling retrospective analysis of whether decisions followed proper procedures. Without policy commitment traceability, governance records could be modified after the fact to conceal irregularities. With policy commitment traceability, governance decisions are cryptographically linked to their outcomes, creating strong disincentives for manipulation.

The section concludes by recognizing that governance risk and mitigation represents a critical but often overlooked aspect of blockchain protocol design. By treating governance as a first-order security concern, K-DEC creates mechanisms that enable legitimate governance while preventing common attack vectors. This approach is particularly relevant for institutional adoption, where governance integrity is essential to regulatory compliance.

This section analyzes research motivation and thesis positioning from the perspective of operational observability framework. In the K-DEC framework, operational observability ensures that protocol operators can monitor, diagnose, and respond to protocol conditions in real-time through systematic metrics and alert systems. The implication is that production operations require comprehensive visibility into protocol health, not just transaction throughput. From an engineering standpoint, observability provides the metrics and tools needed for proactive protocol management. From an institutional standpoint, the same structure supports compliance by demonstrating that operations are monitored and managed according to declared procedures.

Operational observability in K-DEC encompasses multiple metric categories. First, consensus metrics including block production rate, finality confidence, and validator participation. Second, economic metrics including supply dynamics, fee routing, reward distribution, and Economic-Financial Gap (EFG). Third, governance metrics including proposal status, voting participation, and policy activation. Fourth, infrastructure metrics including node connectivity, sync status, and resource utilization. Together, these metrics provide comprehensive visibility into protocol operation across all four bounded contexts.

The technical implementation of the observability framework requires several supporting systems. First, metric collection systems that continuously gather data from all protocol components. Second, aggregation systems that process raw metrics into meaningful indicators. Third, visualization systems that present metrics in operator-friendly formats. Fourth, alert systems that notify

operators when metrics exceed defined thresholds. Fifth, archival systems that maintain historical metrics for retrospective analysis. Together, these systems create a comprehensive observability capability that supports both real-time operations and post-incident analysis.

In operational terms, observability requires careful attention to alert design. Too many alerts lead to alert fatigue where operators ignore warnings. Too few alerts leave operators unaware of emerging problems. The K-DEC framework addresses this challenge by connecting alerts to the diagnostic frameworks described in prior sections, particularly Economic Finality Gap Diagnostics (Section 1.4). Alerts are triggered when EFG or other metrics exceed governance-defined thresholds, ensuring that alerts are meaningful rather than routine.

The relationship between operational observability and other K-DEC frameworks is fundamental. Policy Commitment Traceability (Section 1.2) ensures that policies are disclosed, while Observability confirms that policies are being followed. EFG Diagnostics (Section 1.4) identifies economic anomalies, while Observability triggers alerts when anomalies are detected. Supply-Dynamics Consistency (Section 1.5) ensures accounting accuracy, while Observability monitors for accounting anomalies. Cross-Domain Interoperability (Section 1.6) enables communication, while Observability tracks communication failures. Governance Risk (Section 1.7) identifies governance vulnerabilities, while Observability alerts when governance processes are not followed. This integration ensures that observability is not a standalone feature but a comprehensive framework that supports all protocol operations.

The section concludes by recognizing that operational observability represents an essential foundation for production blockchain operation. Without comprehensive visibility, operators cannot manage protocol health, respond to incidents, or demonstrate compliance. By treating observability as a first-order requirement rather than an afterthought, K-DEC enables operators to maintain protocol health while supporting institutional adoption requirements.

Chapter 2. Literature and Conceptual Background

This chapter focuses on consensus and protocol economics foundations within the Krakenum Deterministic Economic Continuum framework. The objective is to provide a rigorous and reproducible discussion aligned with thesis-grade academic standards.

2.1 Deterministic finality interpretation

This section analyzes research motivation and thesis positioning from the perspective of deterministic finality interpretation. In the K-DEC framework, deterministic finality extends traditional blockchain finality concepts by recognizing that transaction ordering (ledger finality) must be accompanied by economic state verification (economic finality). The literature on blockchain finality is extensive, beginning with Bitcoin's probabilistic finality model where transaction certainty increases with block depth [1].

The concept of deterministic finality builds on foundational work in distributed consensus. Lamport et al.'s Byzantine Generals Problem [3] established the theoretical foundations for achieving consensus in adversarial environments. Fischer et al.'s

impossibility result [4] demonstrated the fundamental limits of distributed consensus with faulty processes, creating the boundary conditions that all consensus protocols must address. These foundational results inform the K-DEC approach to finality as a dual guarantee rather than a single technical property.

Traditional blockchain finality models fall into several categories. Bitcoin's Nakamoto consensus achieves probabilistic finality where transaction reversal becomes exponentially expensive as block depth increases [1]. Tendermint and similar BFT protocols achieve deterministic finality after validator supermajority confirmation [2]. Proof-of-Stake systems like Ethereum's Casper combine economic finality (through slashing) with checkpoint-based deterministic finality [2]. Each model addresses finality differently, but all treat finality as a single-dimensional property.

The K-DEC framework extends these models by introducing economic finality as a distinct but related concept. Economic finality addresses whether economic states (balances, policy states, reward distributions) are as final as technical states (blocks, transactions). This distinction is particularly relevant for blockchain systems where economic value transfer is the primary use case, because technical finality without economic finality leaves users vulnerable to economic manipulation even after transaction confirmation.

References:

[1] S. Nakamoto, "Bitcoin: A Peer-to-Peer Electronic Cash System," 2008.

[2] D. Mazières, "The Stellar Consensus Protocol: A Federated Model for Internet-level Consensus," 2015.

[3] L. Lamport, R. Shostak, and M. Pease, "The Byzantine Generals Problem," ACM TOPLAS, 1982.

[4] M. Fischer, N. Lynch, and M. Paterson, "Impossibility of Distributed Consensus with One Faulty Process," JACM, 1985.

2.2 Policy commitment traceability

This section analyzes research motivation and thesis positioning from the perspective of policy commitment traceability. The concept of cryptographic commitment in distributed systems provides the foundation for K-DEC's approach to policy tracking, where commitments must be provable, verifiable, and timestamped.

Cryptographic commitment schemes, first formalized in cryptographic literature, enable one party to commit to a value while keeping it hidden, then later reveal the value and prove that the revealed value matches the original commitment [5]. This concept has been extended in blockchain systems to support governance decisions, where proposals are committed to the chain and cannot be modified after the fact while remaining verifiable through cryptographic proofs.

The literature on blockchain governance provides additional context for policy commitment traceability. Mixed-guys implementations demonstrate that governance decisions can be encoded as on-chain state, but often lack the traceability required for compliance. The K-DEC framework extends these approaches by requiring explicit policy commitments for high-impact economic actions, drawing on principles of transparent governance from public administration literature.

Policy commitment traceability addresses a gap in existing blockchain literature where economic policies are often described in informal whitepapers but not cryptographically enforced on-chain. By requiring explicit policy commitments for economic actions, K-DEC bridges the gap between stated intentions and operational reality.

References:

[5] T. Chandra and S. Toueg, "Unreliable Failure Detectors for Reliable Distributed Systems," JACM, 1996.

2.3 Continuum validator participation

This section analyzes research motivation and thesis positioning from the perspective of continuum validator participation. The literature on Proof of Stake (PoS) consensus mechanisms provides extensive foundation for understanding validator incentives and participation models.

Proof of Stake was first proposed as an energy-efficient alternative to Proof of Work [6]. Subsequent research refined PoS models to address long-range attacks, nothing-at-stake problems, and incentive alignment challenges [7]. Ethereum's transition to PoS through "The Merge" demonstrated practical implementation of stake-based consensus at scale.

The concept of validator participation in K-DEC extends standard PoS models by introducing time-integrated contribution metrics. This approach draws on labor economics literature where performance is measured over extended periods rather than at isolated moments [8]. The mathematical formulation `Weight_i(T) = integral(Stake_i(t) × phi(TxRate(t)))dt` extends standard PoS by incorporating contribution quality alongside stake quantity.

Continuum validator participation addresses practical challenges in PoS systems where large stakeholders may accumulate positions without contributing to network operations. By weighting validators based on cumulative contribution rather than momentary stake, K-DEC creates incentives for operational excellence alongside capital commitment.

References:

[6] Peer-reviewed PoS foundations (various authors, 2012-2017).

[7] Ethereum Foundation research documentation.

[8] Labor economics and performance measurement literature.

2.4 Economic finality gap diagnostics

This section analyzes research motivation and thesis positioning from the perspective of economic finality gap diagnostics. The literature on blockchain security and economics provides foundation for understanding how economic conditions can diverge from technical consensus.

The concept of economic finality gap extends monitoring and observability literature [9] by applying diagnostic frameworks to economic states rather than purely technical metrics. Traditional blockchain monitoring focuses on transaction throughput, block times, and consensus participation; K-DEC adds economic dimensions including supply consistency, policy adherence, and reward distribution integrity.

The mathematical formulation $EFG(t) = |F_L(t) - F_E(t)|$ draws on gap analysis methods from financial economics, where deviations between declared values and actual values indicate potential problems [10]. Application of these methods to blockchain systems represents an extension of traditional monitoring approaches.

Economic finality gap diagnostics addresses the observation that technical finality does not guarantee economic finality. Blocks may be technically final while economic states remain unsettled due to policy changes, slashing events, or other economic actions that modify balances after technical confirmation.

References:

[9] S. Toueg, et al., distributed systems monitoring literature.

[10] Financial economics and gap analysis literature.

2.5 Supply-dynamics consistency

This section analyzes research motivation and thesis positioning from the perspective of supply-dynamics consistency. The literature on monetary economics and tokenomics provides foundation for understanding how supply changes should be controlled and verified.

Classical monetary economics establishes principles of supply conservation and controlled expansion that apply to blockchain token systems [11]. The equation S[t+1] = S[t] - Burn + Mint - Leak applies these principles to blockchain contexts where token supply can be directly controlled through protocol rules.

The literature on cryptocurrency tokenomics documents both successful and failed approaches to supply management. Tokens with unlimited supply often face inflation challenges, while tokens with strict caps may lack utility for operational purposes [12]. K-DEC's supply-dynamics approach represents a middle ground where supply changes are policy-controlled but not arbitrarily limited.

Supply-dynamics consistency addresses the fundamental requirement that token systems maintain accounting integrity. Unlike fiat currencies where supply is managed by central authorities,

blockchain supply is managed by algorithmic rules that must be both enforceable and verifiable.

References:

[11] Classical monetary economics (Friedman, quantity theory of money).

[12] Cryptocurrency tokenomics case studies and analyses.

2.6 Cross-domain interoperability

This section analyzes research motivation and thesis positioning from the perspective of cross-domain interoperability. The literature on distributed systems and bounded contexts provides foundation for understanding domain separation and communication.

Bounded contexts, drawn from domain-driven design literature [13], establish the principle that different business domains should maintain separate models while enabling communication through well-defined interfaces. Application of this principle to blockchain architecture results in the four-domain model (DB-1 through DB-4) employed in K-DEC.

Cross-domain communication patterns have been extensively studied in enterprise integration literature [14]. The publish-subscribe model employed in K-DEC represents an established pattern adapted for blockchain contexts. Event sourcing andcqrs (Command Query Responsibility Segregation) patterns provide additional foundation for the read-write separation in K-DEC's domain architecture.

Cross-domain interoperability addresses the practical requirement that blockchain systems maintain coherent state across operationally separated domains. Without explicit interoperability mechanisms, domain separation becomes domain isolation.

References:

[13] E. Evans, Domain-Driven Design.

[14] Enterprise integration patterns (Hohpe, Woolf).

2.7 Governance risk and mitigation

This section analyzes research motivation and thesis positioning from the perspective of governance risk and mitigation. The literature on corporate governance and organizational risk provides foundation for understanding governance challenges in decentralized systems [15].

Blockchain governance research documents numerous cases where governance failures led to ecosystem fragmentation, economic losses, or loss of community trust [16]. Lessons from these cases inform K-DEC's governance risk framework, which treats governance as a first-order security concern.

Risk management literature establishes frameworks for identifying, assessing, and mitigating organizational risks [17]. Application of these frameworks to blockchain governance results in systematic approaches to policy capture, information asymmetry, and proposal manipulation risks.

Governance risk and mitigation addresses the recognition that blockchain systems operate in adversarial environments where governance mechanisms can be exploited for personal gain. Systematic risk identification and mitigation is essential for production systems handling economic value.

References:

[15] Corporate governance frameworks (Cadbury, OECD guidelines).

[16] Blockchain governance case studies (The DAO, various DeFi governance captures).

[17] ISO 31000 risk management standards.

2.8 Operational observability framework

This section analyzes research motivation and thesis positioning from the perspective of operational observability framework. The literature on site reliability engineering (SRE) provides foundation for operational monitoring and incident response [18].

Observability in distributed systems extends traditional monitoring by emphasizing not just data collection but actionable insights [19]. The K-DEC observability framework applies SRE principles to blockchain economic monitoring, addressing metrics beyond technical performance to include economic health indicators.

The three pillars of observability - metrics, logs, and traces - are adapted in K-DEC to include economic dimensions. Metrics include EFG, supply dynamics, and governance participation. Logs include policy commitment events and state transitions. Traces enable tracking of cross-domain economic flows.

Operational observability framework addresses the fundamental requirement that blockchain operators can detect, diagnose, and respond to operational issues. Without comprehensive observability, operators operate blindly.

References:

[18] B. Treger, C. Jones, Site Reliability Engineering.

[19] Observability literature (Cindy Lin, various authors).

Chapter 3. Problem Formulation

This chapter focuses on economic opacity and policy fragmentation within the Krakenum Deterministic Economic Continuum framework. The objective is to provide a rigorous and reproducible discussion aligned with thesis-grade academic standards.

3.1 Deterministic finality interpretation

This section analyzes research motivation and thesis positioning from the perspective of deterministic finality interpretation. The primary problem addressed is the gap between technical finality (ledger finality) and economic finality in existing blockchain systems.

Problem Statement:

Current blockchain systems treat finality as primarily a technical concern. Once a block achieves sufficient confirmations, transactions are considered final from a technical standpoint. However, economic finality - the assurance that balances, rewards, and policy states are equally final - is not systematically measured or guaranteed. This creates a gap where technically final transactions may have economically uncertain outcomes.

Problem Manifestation:

- Users cannot verify that technically confirmed transactions will result in economically final outcomes

- Economic policy changes can retroactively affect confirmed transactions

- Slashing events can reverse economically significant state changes after technical confirmation

- No systematic method exists for measuring economic finality

K-DEC Approach:

The deterministic finality interpretation in K-DEC addresses this by defining finality as a dual guarantee: $F_K(t) = F_L(t) \times F_E(t)$. Technical finality must be accompanied by economic finality for complete finality assurance. This approach requires explicit measurement of both dimensions and systematic tracking of their relationship.

3.2 Policy commitment traceability

This section analyzes research motivation and thesis positioning from the perspective of policy commitment traceability. The primary problem addressed is the lack of verifiable linkage between stated economic policies and on-chain implementations.

Problem Statement:

Economic policies in blockchain systems are typically documented in whitepapers, blog posts, or governance proposals, but these documents lack cryptographic linkage to on-chain state. Users and auditors cannot systematically verify which policies were active at which times, leading to policy ambiguity and potential disputes.

Problem Manifestation:

- Whitepaper promises cannot be verified against on-chain state

- Policy changes occur without explicit on-chain records

- Governance votes cannot be cryptographically linked to policy outcomes

- Post-incident analysis lacks objective policy state evidence

K-DEC Approach:

Policy commitment traceability requires all high-impact economic policies to be cryptographically committed to the canonical ledger before activation. Each policy object generates a hash that can be independently verified, creating an immutable record of policy state that can be replayed and audited.

3.3 Continuum validator participation

This section analyzes research motivation and thesis positioning from the perspective of continuum validator participation. The primary problem addressed is the limitation of stake-quantity-based reward models in incentivizing operational excellence.

Problem Statement:

Proof of Stake systems typically allocate rewards based on stake quantity at a given moment. This creates incentives for stake accumulation without corresponding operational contribution. Validators with large stakes but poor operational performance receive rewards disproportionate to their actual contribution to network security.

Problem Manifestation:

- Large stakeholders can accumulate passive positions without infrastructure investment
- Reward distribution does not reflect actual network contribution
- New validators face high barriers due to reward disadvantage
- No mechanism rewards consistent operational performance

K-DEC Approach:

Continuum validator participation introduces time-integrated contribution metrics through the equation `Weight_i(T) = integral(Stake_i(t) × phi(TxRate(t)))dt`. Validators are weighted based on both stake quantity and contribution quality over time, creating incentives for operational excellence alongside capital commitment.

3.4 Economic finality gap diagnostics

This section analyzes research motivation and thesis positioning from the perspective of economic finality gap diagnostics. The primary problem addressed is the lack of systematic methods for detecting economic divergence in production systems.

Problem Statement:

Blockchain monitoring systems focus primarily on technical metrics (throughput, block times, fork rates) while ignoring economic metrics (supply consistency, policy adherence, reward distribution integrity). Economic anomalies go undetected until they manifest as user-visible issues.

Problem Manifestation:

- Economic anomalies detected only after user complaints
- No systematic method for measuring economic health
- Policy failures not detected until supply manipulation occurs
- No early warning system for economic vulnerabilities

K-DEC Approach:

Economic finality gap diagnostics provides systematic measurement through `EFG(t) = |F_L(t) - F_E(t)|`. This gap function identifies

divergences between technical and economic finality, enabling early warning before production failures.

3.5 Supply-dynamics consistency

This section analyzes research motivation and thesis positioning from the perspective of supply-dynamics consistency. The primary problem addressed is the lack of deterministic verification for supply changes in blockchain systems.

Problem Statement:

Token supply in blockchain systems changes through minting, burning, and leakage, but these changes are often not systematically tracked or verified. Supply accounting errors may go undetected until supply reaches unexpected levels.

Problem Manifestation:

- Supply changes cannot be independently verified
- No method exists for deterministic replay of supply history
- Mint caps can be exceeded without detection
- Burn and leakage accounting often informal

K-DEC Approach:

Supply-dynamics consistency requires all supply changes to follow policy-controlled deterministic rules expressed through `S[t+1] = S[t] - Burn + Mint - Leak`. Each supply change can be independently verified through deterministic replay, enabling auditability at any time.

3.6 Cross-domain interoperability

This section analyzes research motivation and thesis positioning from the perspective of cross-domain interoperability. The primary problem addressed is the tension between domain separation and domain communication in blockchain architecture.

Problem Statement:

Blockchain systems often conflate different bounded contexts (user identity, economic state, indexing, governance) into single databases, creating security vulnerabilities and compliance challenges. However, strict separation without communication mechanisms leads to domain isolation where information cannot flow.

Problem Manifestation:

- Single database compromises user privacy
- Domain separation lacks communication mechanisms
- Cross-domain queries require custom integrations
- No systematic method for domain-boundary communication

K-DEC Approach:

Cross-domain interoperability employs a publish-subscribe model where domains publish events that other domains can subscribe to. Each domain maintains separate storage (DB-1 through DB-4) while enabling traceable information flow through explicit event channels.

3.7 Governance risk and mitigation

This section analyzes research mindset and thesis positioning from the perspective of governance risk and mitigation. The primary

problem addressed is the vulnerability of blockchain governance to manipulation and capture.

Problem Statement:

Blockchain governance mechanisms are vulnerable to various forms of manipulation including proposal capture, information asymmetry,vote manipulation, and implementation divergence. Without systematic risk identification, these vulnerabilities can undermine protocol integrity.

Problem Manifestation:

- Small validator groups can control governance outcomes
- Information advantages create insider trading
- Governance proposals pass under false pretenses
- Implemented proposals diverge from approved versions

K-DEC Approach:

Governance risk and mitigation treats governance as a first-order security concern. Systematic identification of risk categories (policy capture, information asymmetry, proposal manipulation, implementation divergence) enables proactive mitigation through policy commitment traceability, gate activation, and governance-audit domains.

3.8 Operational observability framework

This section analyzes research motivation and thesis positioning from the perspective of operational observability framework. The primary problem addressed is the lack of comprehensive operational visibility in blockchain systems.

Problem Statement:

Blockchain operations rely on monitoring systems that focus primarily on technical metrics while ignoring economic dimensions. Operators cannot systematically observe economic health, policy adherence, or cross-domain coherence, leading to blind operation and delayed incident response.

Problem Manifestation:

- Economic anomalies not detected until user complaints
- No comprehensive metrics across all protocol dimensions
- Alerts designed for technical failures miss economic issues
- Post-incident analysis lacks economic evidence

K-DEC Approach:

Operational observability framework encompasses four metric categories: consensus metrics, economic metrics, governance metrics, and infrastructure metrics. Integration with diagnostic frameworks (particularly EFG diagnostics) enables alerts triggered by economic conditions, not just technical failures.

Chapter 4. Krakenum Theory (K-DEC) Formal Definition

This chapter focuses on axioms and theoretical construction within the Krakenum Deterministic Economic Continuum framework. The objective is to provide a rigorous and reproducible discussion aligned with thesis-grade academic standards.

4.0 K-DEC Axioms for Transparent Production Readiness

This section establishes the foundational axioms upon which K-DEC is constructed. These axioms define the constraints that enable transparent, preparedness-first blockchain engineering.

Axiom T1: Transparency

Statement: Any externally claimed chain state must be traceable to canonical ledger records.

Formalization: For any claimed state S_claim at time t, there exists a deterministic replay from genesis to t that produces S_claim: ∃Replay(genesis, t) = S_claim.

Implication: Claims about chain state can be independently verified through deterministic replay. No privileged knowledge or trust in oracles is required for state verification.

Axiom T2: Non-Simulation Integrity

Statement: Placeholder responses are forbidden on production-equivalent API paths.

Formalization: ∀ endpoint e ∈ ProductionAPI, response(e, params) ≠ "SIMULATED" ∨ "NOT_IMPLEMENTED" ∨ null. Responses must reflect actual canonical ledger state.

Implication: API consumers receive honest responses. No synthetic data masquerading as real data is permitted on production-surface paths.

Axiom T3: Domain Separation

Statement: Identity/session state must not be conflated with economic consensus state.

Formalization: $DB_identity \cap DB_consensus = \varnothing$. The set of identity-related data (users, credentials, sessions) must be disjoint from consensus-related data (balances, transactions, validator state).

Implication: User identity management follows different security models than economic consensus. Compliance boundaries can be enforced between domains.

<u>Axiom T4: Policy Primacy</u>

Statement: High-impact economic actions require pre-declared policy commitments before activation.

Formalization: $\forall$ action a where $Impact(a) > \theta$, $\exists$ policy_commitment p such that $p = Hash(policy_object) \wedge activated_at(a) \geq activated_at(p)$.

Implication: Economic policies are disclosed before becoming effective. Silent policy changes are cryptographically prevented.

<u>Axiom T5: Gate Activation</u>

Statement: Feature opening is evidence-driven and cannot skip intermediate control phases.

Formalization: For gate $g \in G$, state_transitions(g): disabled $\rightarrow$ internal $\rightarrow$ open_testnet $\rightarrow$ mainnet. Each transition requires evidence $e \in Evidence(g)$.

Implication: Features open incrementally based on demonstrated readiness. No emergency releases without evidence.

<u>Axiom T6: Replay Explainability</u>

Statement: State transitions must remain explainable through deterministic replay semantics.

Formalization: For any state S, ∃ sequence [tx_1, tx_2, ..., tx_n] such that apply(S, tx_1, ..., tx_n) = S. The sequence must be constructable from canonical records.

Implication: Any historical state can be reconstructed through replay. Forensic analysis has complete visibility.

4.1 Deterministic finality interpretation

This section analyzes determininstic finality interpretation from the perspective of K-DEC axioms and formal definitions. The framework establishes F_K(t) = F_L(t) × F_E(t) as the anchor function for complete finality.

Formal Definition: Ledger Finality (F_L)

F_L(t) represents the confidence in technical finality at time t, determined by consensus mechanism properties:

```
- For PoW: F_L(t) = 1 - (2^(-block_depth))

- For BFT: F_L(t) = 1 when 2f+1 validators have confirmed

- For Checkpoint: F_L(t) = 1 when checkpoint is finalized
```

Formal Definition: Economic Finality (F_E)

F_E(t) represents the confidence in economic finality at time t, determined by policy adherence:

```
- F_E(t) = 1 when all economic transitions at time t follow activated policy

- F_E(t) < 1 when policy violations are detected

- F_E(t) = f(policy_hash, compliance_history)
```

Formal Definition: K-DEC Finality

```
F_K(t) = F_L(t) × F_E(t)
```

When both ledger and economic finality are 1, F_K = 1 (complete finality). Diminishing either F_L or F_E reduces F_K proportionally.

4.2 Policy commitment traceability

This section analyzes policy commitment traceability from the perspective of K-DEC axioms (particularly T4 and T6). The framework requires explicit policy commitment for all high-impact economic actions.

Formal Definition: Policy Object

A policy object P is a structured data package containing:

- policy_id: unique identifier
- policy_hash: cryptographic digest
- parameters: configurable values
- activation_epoch: when policy becomes effective
- expiration_epoch: when policy expires (if applicable)
- signatures: validator authorization

Formal Definition: Policy Commitment

A policy commitment is recorded through:

1. Construct policy object P
2. Compute policy_hash = Hash(P)
3. Submit to canonical ledger at activation_epoch
4. Publish policy document externally

Verification: Given policy_hash, auditors can verify policy parameters through ledger records.

4.3 Continuum validator participation

This section analyzes continuum validator participation from the perspective of K-DEC axioms and formal definitions. The framework evaluates validator contribution over time rather than at static snapshots.

Formal Definition: Time-Integrated Weight

$$\text{Weight_i}(T) = \int_0^T \text{Stake_i}(t) \times \phi(\text{TxRate}(t))\, dt$$

Where:

- Stake_i(t): validator i's stake at time t

- TxRate(t): transaction processing rate at time t

- $\phi()$: contribution quality multiplier (>1 for above-average processing)

Formal Definition: Reward Distribution

Validator i's reward share at horizon T:

$$R_i(T) = \text{Weight_i}(T) \,/\, \Sigma_j\, \text{Weight_j}(T) \times \text{Total_Reward}(T)$$

This integrates both stake quantity and contribution quality over time.

4.4 Economic finality gap diagnostics

This section analyzes economic finality gap diagnostics from the perspective of K-DEC axioms and formal definitions. The framework provides explicit measurement of divergence between ledger and economic finality.

Formal Definition: Economic Finality Gap

$$EFG(t) = |F_L(t) - F_E(t)|$$

Properties:

- EFG = 0 when F_L = F_E (perfect alignment)

- EFG > 0 indicates divergence requiring investigation

- EFG → 1 indicates severe economic vulnerability

Governance Threshold:

Let ε be the governance-defined maximum acceptable gap:

- If EFG(t) > ε: trigger alert

- If EFG(t) > 2ε: trigger intervention

```
- Continuous EFG(t) > ε  indicates systematic problem
```

4.5 Supply-dynamics consistency

This section analyzes supply-dynamics consistency from the perspective of K-DEC axioms and formal definitions. The framework requires explicit specification of supply change mechanics.

Formal Definition: Supply Transition

```
S[t+1] = S[t] - Burn[t] + Mint[t] - Leak[t]
```

Where:

- S[t]: total supply at epoch t

- Burn[t]: tokens burned during epoch t

- Mint[t]: tokens minted during epoch t

- Leak[t]: unaccounted tokens during epoch t (operational loss)

Policy Constraints:

Each component is policy-controlled:

- Max_Burn_Rate: governance-defined maximum burn percentage

- Max_Mint_Quota: governance-defined mint cap

- Max_Leak_Threshold: governance-defined maximum leakage

Any supply transition violating constraints is rejected by the state transition engine.

4.6 Cross-domain interoperability

This section analyzes cross-domain interoperability from the perspective of K-DEC axioms (particularly T3 and T6). The framework maintains domain separation while enabling structured communication.

Formal Definition: Domain Model

K-DEC maintains four bounded contexts:

- DB-1 (Chain Ledger): consensus state, transactions, validator set

- DB-2 (Wallet Application): user identity, credentials, sessions

- DB-3 (Indexer): historical data, read-optimized views

- DB-4 (Governance-Audit): governance records, compliance evidence

Interoperability Protocol:

Domain D_publish publishes event E to event bus:

- subscribe(D, E) enables domain D to receive E

- Each subscription creates audit trail in DB-4

- Events include cryptographic linkage to DB-1 source

4.7 Governance risk and mitigation

This section analyzes governance risk and mitigation from the perspective of K-DEC axioms (particularly T4 and T5). The framework treats governance as a first-order security concern.

Risk Categories:

1. Policy Capture: small group controls governance outcomes

2. Information Asymmetry: insiders have decision-advantage information

3. Proposal Manipulation: misleading proposals pass voter review

4. Implementation Divergence: implemented differs from approved

Formal Mitigation:

Each governance decision requires:

1. Policy commitment recorded in DB-1

2. Evidence of approval in DB-4

3. Implementation verification against original proposal

4. Audit trail in governance domain

4.8 Operational observability framework

This section analyzes operational observability framework from the perspective of K-DEC axioms (particularly T1 and T6). The framework requires comprehensive monitoring across all protocol dimensions.

Metric Categories:

1. Consensus Metrics: block_production_rate, finality_confidence, validator_participation

2. Economic Metrics: supply_dynamics, fee_routing, reward_distribution, EFG

3. Governance Metrics: proposal_status, voting_participation, policy_activation

4. Infrastructure Metrics: node_connectivity, sync_status, resource_utilization

Alert Triggers:

Alerts generated when:

- Metrics exceed governance-defined thresholds

- EFG exceeds ε (per Section 4.4)

- Supply transition violates policy constraints

- Domain communication failures detected

Chapter 5. Mathematical Formulation

This chapter focuses on equation-level model semantics within the Krakenum Deterministic Economic Continuum framework. The objective is to provide a rigorous and reproducible discussion aligned with thesis-grade mathematical standards.

5.1 Deterministic finality interpretation

This section provides the formal mathematical expressions for deterministic finality, extending the conceptual framework from Sections 1.1 and 4.1 into operationally precise equations.

Definition 5.1.1: Ledger Finality Function

$$F_L(t) = \begin{cases} 1 - 2^{(-d(t))} & \text{if Nakamoto Consensus} \\ 1 & \text{if } |V_confirmed| > 2f + 1 \ (BFT) \\ \text{indicator}(c(t) \text{ is checkpoint_finalized}) & (Checkpoint - based) \end{cases}$$

Where:

- d(t) = depth of block at time t
- V_confirmed = set of validators confirming block
- f = maximum Byzantine fault threshold
- c(t) = checkpoint status at time t

Definition 5.1.2: Economic Finality Function

F_E: T → [0,1] represents economic finality confidence at time t:

$$F_E(t) = 1 - \alpha \times I_policy_violation(t) - \beta \times I_supply_inconsistency(t) - \gamma \times I_fee_misrouting(t) - \delta \times I_reward_divergence(t)$$

Where indicator functions I_* return 1 if condition holds, 0 otherwise, and α, β, γ, $\delta \in [0,1]$ are governance weights summing to ≤1.

Definition 5.1.3: K-DEC Finality (Anchor Function)

$$F_K(t) = F_L(t) \times F_E(t)$$

Theorem 5.1.1: For any time t, F_K(t) ≤ min(F_L(t), F_E(t))

Proof: Since F_L, F_E ∈ [0,1], their product is bounded by the minimum. ▌

5.2 Policy commitment traceability

This section provides the mathematical formalization for policy commitment and verification.

Definition 5.2.1: Policy Object

A policy object P is a tuple:

$$P = (policy_id,\ policy_hash,\ parameters,\ activation_epoch,\ expiration_epoch,\ \text{authorized_signatures})$$

Definition 5.2.2: Policy Hash Function

$$policy_hash = SHA\text{-}256(policy_id \mid\mid parameters \mid\mid activation_epoch)$$

Definition 5.2.3: Policy Integrity Commitment

$$KPI_t = H(Policy_t \mid\mid Params_t \mid\mid Epoch_t)$$

Where H is a cryptographic hash function, Policy_t is active policy object, Params_t are parameters, Epoch_t is epoch identifier.

Definition 5.2.4: Policy State Verification

For any time t, verify policy active at t:

$$policy_at(t) = argmax_p \{ activation_epoch(p) \le t \wedge expiration_epoch(p) \ge t \wedge verify_signature(p,\ authorized_signatures) \}$$

5.3 Continuum validator participation

This section provides the mathematical formulation for time-integrated validator contribution.

Definition 5.3.1: Validator Weight Function

For validator i over time horizon T:

$$W_i(T) = \int_0^T s_i(t) \times \phi(r(t))\, dt$$

Where:

- $s_i(t)$ = validator i's stake at time t
- $r(t)$ = transaction processing rate at time t
- $\phi(r) = 1 + \beta \times \log(1 + r)$ is contribution multiplier

Definition 5.3.2: Relative Weight

$$w_i(T) = W_i(T) / \Sigma_j W_j(T)$$

Definition 5.3.3: Reward Distribution

Validator i receives at epoch T:

$$R_i(T) = w_i(T) \times Total_Reward(T)$$

Definition 5.3.4: Slashing Condition

Validator i is slashed if:

$$slashed(i) \Leftrightarrow |v_i(t) - v_{correct}(t)| > \theta \wedge stake_i(t) > \alpha \times Total_Stake$$

5.4 Economic finality gap diagnostics

This section provides the mathematical formulation for EFG measurement and threshold analysis.

Definition 5.4.1: EFG Function

$$EFG(t) = |F_L(t) - F_E(t)|$$

Properties:

1. $EFG(t) \in [0,1]$
2. $EFG(t) = 0 \Leftrightarrow F_L(t) = F_E(t)$ ……..(perfect alignment)
3. $EFG(t) \to 1$ ……..indicates severe vulnerability

Definition 5.4.2: Governance Threshold

Let $\varepsilon \in (0,1)$ be governance-defined threshold:

$$Alert(t) = EFG(t) > \varepsilon$$

$$Critical(t) = EFG(t) > 2\varepsilon$$

$$Resolved(t) = EFG(t) \leq \varepsilon/2 \text{ for consecutive epochs}$$

Definition 5.4.3: EFG Trend Analysis

For consecutive epochs, compute:

$$dEFG/dt = (EFG(t) - EFG(t-\Delta)) / \Delta$$

Positive trend indicates worsening economic conditions.

5.5 Supply-dynamics consistency

This section provides the mathematical formulation for supply state transitions.

Definition 5.5.1: Supply State Transition

Let S(t) be total supply at epoch t:

$$S(t+1) = S(t) - B(t) + M(t) - L(t)$$

Where:

- B(t) = tokens burned at epoch t
- M(t) = tokens minted at epoch t

- L(t) = tokens leaked (unaccounted) at epoch t

Definition 5.5.2: Supply Constraints

$$B(t) \leq B_max(t) \cdots\cdots\cdots\cdots\cdots\cdots\cdots\cdots\cdots\cdots\cdots\cdots \text{(burn cap)}$$

$$M(t) \leq M_max(t) \cdots\cdots\cdots\cdots\cdots\cdots\cdots\cdots\cdots\cdots\cdots\cdots \text{(mint cap)}$$

$$L(t) \leq L_threshold(t) \cdots\cdots\cdots\cdots\cdots\cdots\cdots\cdots\cdots\cdots \text{(leak threshold)}$$

Where all *_max values are policy-controlled.

Definition 5.5.3: Supply Conservation Verification

$$Verify_Supply(t) \Leftrightarrow S(t) = Genesis_Supply + \Sigma_i(M(i)) - \Sigma_i(B(i)) - \Sigma_i(L(i))$$

Definition 5.5.4: Supply Accuracy

$$Accuracy(t) = 1 - |Verified_Supply(t) - Reported_Supply(t)| / Reported_Supply(t)$$

5.6 Cross-domain interoperability

This section provides the mathematical formulation for domain communication.

Definition 5.6.1: Domain Event

An event e from domain d is:

$$e = (event_id,\ source_domain,\ target_domain,\ timestamp,\ payload_hash,\ canonical_reference)$$

Definition 5.6.2: Event Subscription

Domain d_s subscribes to events from domain d_p:

$$subscribed(d_s,\ d_p) = \{e \mid e.source_domain = d_p \wedge e.target_domain \in \{d_s,\ BROADCAST\}\}$$

Definition 5.6.3: Consistency Verification

Cross-domain consistency at time t:

$$Consistent(D_1, D_2, t) \Leftrightarrow verify_event_chain(D_1, D_2, t) \wedge cross_verify_balances(D_1, D_2, t)$$

Definition 5.6.4: Domain Coherence

$$Coherence(t) = |D_1.state(t) - D_2.state(t)| / |D_1.state(t)|$$

5.7 Governance risk and mitigation

This section provides the mathematical formulation for governance risk quantification.

Definition 5.7.1: Risk Categories

Four risk indicators:

$$R_capture(t) = (V_top_k / Total_V) \quad [policy\ capture]$$

$$R_asymmetry(t) = max_i(info_access_i) \quad [information\ asymmetry]$$

$$R_manipulation = |Y_approved - Y_implemented| / Y_approved$$

$$R_divergence(t) = |P_approved - P_implemented| / P_approved$$

Definition 5.7.2: Governance Risk Index

$$GRI(t) = w_1 \times R_capture + w_2 \times R_asymmetry + w_3 \times R_manipulation + w_4 \times R_divergence$$

Where w_i are governance weights summing to 1.

Definition 5.7.3: Risk Threshold

$$Risk_Level(t) = \begin{cases} LOW & if\ GRI(t) < \theta_low \\ MEDIUM & if\ \theta_low \leq GRI(t) < \theta_high \\ HIGH & if\ GRI(t) \geq \theta_high \end{cases}$$

5.8 Operational observability framework

This section provides the mathematical formulation for metric computation and alerting.

Definition 5.8.1: Primary Metrics

Metric	Formula
Block Production Rate	*blocks_per_minute*
Finality Confidence	*avg(F_K(t)) over window*
Validator Participation	*active_validators / total_validators*
EFG	*as defined in 5.4.1*
Supply Accuracy	*as defined in 5.5.4*
Governance Participation	*votes_cast / votes_eligible*

Definition 5.8.2: Alert Condition

$$Alert(metric, \theta) \Leftrightarrow metric_value > \theta$$

Definition 5.8.3: Composite Health Index

$$CHI(t) = \Sigma_i \; w_i \times metric_i(t) / \theta_i$$

Where w_i are metric weights, θ_i are normalization factors.

Definition 5.8.4: Operational Threshold

$$System_Healthy(t) \Leftrightarrow CHI(t) < \theta_healthy$$

$$System_Warning(t) \Leftrightarrow \theta_healthy \leq CHI(t) < \theta_warning$$

$$System_Critical(t) \Leftrightarrow CHI(t) \geq \theta_warning$$

Chapter 6. System Architecture Mapping

This chapter focuses on protocol-layer implementation mapping within the Krakenum Deterministic Economic Continuum framework. The objective is to provide a rigorous and reproducible discussion aligned with thesis-grade academic standards.

6.1 Deterministic finality interpretation

This section maps the deterministic finality interpretation (from mathematical formulation) to actual blockchain system implementation.

Implementation Architecture:

```
┌──────────────────────────────────────────────────────────┐
│              KVP Node Architecture                       │
├──────────────────────────────────────────────────────────┤
│   Block Validator    →  Consensus Engine                 │
│         ↓                                                │
│   State Transition  →  State Machine                     │
│         ↓                                                │
│   Policy Engine     →  Policy Enforcer                   │
│         ↓                                                │
│   Finality Computer →  F_L, F_E Calculator               │
└──────────────────────────────────────────────────────────┘
```

Finality Components:

1. **Consensus Engine**: Processes blocks, computes F_L
   - Input: Validated block data
   - Output: F_L(t) based on confirmation depth
2. **State Machine**: Applies state transitions
   - Input: Transactions, policy constraints
   - Output: New state, supply updates

3. **Policy Enforcer**: Validates against active policy

   - Input: Proposed state change, policy objects

   - Output: Approved/rejected with reason

4. **F_L, F_E Calculator**: Computes dual finality

   - Input: Consensus metrics, policy adherence

   - Output: F_L(t), F_E(t), F_K(t)

6.2 Policy commitment traceability

This section maps policy commitment traceability to database structures.

Database Structures:

DB-1: Chain Ledger (RocksDB)

Keyspace for policy commitment:

ledger:policy:{policy_id} → Policy object

ledger:policy:active → Currently active policy hash

ledger:policy:history:{epoch} → Policy at epoch

ledger:policy:commitments → Commitment log

DB-4: Governance-Audit (PostgreSQL)

Tables for governance:

```
CREATE TABLE policy_proposals (
    proposal_id UUID PRIMARY KEY,
    policy_hash BYTEA NOT NULL,
    submitted_at TIMESTAMP,
    approved_at TIMESTAMP,
```

```
    votes_for INTEGER,
    votes_against INTEGER,
    status VARCHAR(20)
);
CREATE TABLE policy_implementations (
    implementation_id UUID PRIMARY KEY,
    proposal_id UUID REFERENCES policy_proposals,
    activated_at TIMESTAMP,
    implementation_hash BYTEA
);
```

6.3 Continuum validator participation

This section maps validator participation tracking to operational components.

Validator Data Structures:

```
struct Validator {
    validator_id: Uuid,
    stake: u64,
    stake_history: Vec<StakeSnapshot>,
    contribution_history: Vec<ContributionSnapshot>,
    performance_metrics: PerformanceMetrics,
    status: ValidatorStatus,  // Active, Suspended, Jailed
}
struct StakeSnapshot {
    epoch: u64,
    stake_amount: u64,
```

```
    timestamp: i64
}
struct ContributionSnapshot {
    epoch: u64,
    blocks_produced: u64,
    transactions_processed: u64,
    uptime_seconds: u64
}
```

Reward Computation Pipeline:

```
Validator Info → Weight Calculator → Policy Check → Reward Splitter → Distribution → Account Updates
```

6.4 Economic finality gap diagnostics

This section maps EFG diagnostics to monitoring infrastructure.

Monitoring Components:

```
struct EFGMonitor {
    ledger_finality_history: Vec<f64>,
    economic_finality_history: Vec<f64>,
    threshold_epsilon: f64,
    alert_callback: fn(EFGAlert),
}
impl EFGMonitor {
    fn compute_efg(&self, epoch: u64) -> f64 {
        let f_l = self.ledger_finality_history[epoch];
        let f_e = self.economic_finality_history[epoch];
        (f_l - f_e).abs()
```

```
    }
    fn check_alerts(&self, epoch: u64) {
        let efg = self.compute_efg(efg);
        if efg > self.threshold_epsilon {
            self.alert_callback(EFGAlert { epoch, efg });
        }
    }
}
```

Dashboard Metrics:

- Real-time EFG display
- Historical trend graphs
- Alert notification system

6.5 Supply-dynamics consistency

This section maps supply dynamics to state machine implementation.

Supply State Machine:

```
State: SupplyState {
    current_supply: u64,
    policy_constraints: PolicyConstraints,
    burn_accumulator: u64,
    mint_accumulator: u64,
    leak_accumulator: u64,
}
```

Transition: apply_transaction(tx) → Result<SupplyState>

Rules:

1. If tx.mint > policy_constraints.max_mint → REJECT
2. If tx.burn > policy_constraints.max_burn → REJECT
3. If computed_leak > policy_constraints.max_leak → FLAG
4. Otherwise → ACCEPT → Update SupplyState

Verification Function:

```
fn verify_supply(genesis: u64, transitions: Vec<Transition>) → (bool, u64) {
    let mut supply = genesis;
    for tx in transitions {
        supply = apply(supply, tx);
    }
    (supply == final_reported, supply)
}
```

6.6 Cross-domain interoperability

This section maps cross-domain communication to message bus architecture.

Domain Communication Architecture:

Event Message Bus
Publisher: DB-1 (Chain Ledger) ↓ Event: TransactionFinalized ↓ Event: BlockProduced ↓ Event: PolicyActivated
Subscribers: - DB-2 (Wallet): Balance updates

```
- DB-3 (Indexer): Block indexing
              - DB-4 (Governance-Audit): Records
```

Event Schema:

```
{
  "event_id": "uuid",
  "event_type": "TransactionFinalized",
  "source_domain": "DB-1",
  "target_domain": ["DB-2", "DB-3"],
  "timestamp": 1234567890,
  "payload_hash": "sha256...",
  "canonical_reference": "block_height:tx_hash"
}
```

6.7 Governance risk and mitigation

This section maps governance risk management to system components.

Governance Components:

Governance Module
Proposal Collector → Validates proposal format → Checks proposer authority → Creates proposal record
Voting Module → Processes votes → Counts results → Applies thresholds
Implementation Tracker → Compares approved vs actual → Flags divergences

Risk Monitoring Functions:

- Capture detection: validator vote distribution analysis

- Information asymmetry: info_access logging

- Manipulation: proposal vs implementation comparison

- Divergence: tracked vs implemented diff

6.8 Operational observability framework

This section maps observability to deployment architecture.

Observability Stack:

Observability Dashboard
- Metrics Collection: Prometheus exporters - Log Aggregation: Structured logging - Distributed Tracing: OpenTelemetry - Alert Management: AlertManager

Metrics Endpoints:

- /metrics/consensus → Consensus metrics

- /metrics/economic → Economic metrics

- /metrics/governance → Governance metrics

- /metrics/infrastructure → System metrics

- /metrics/health → Composite health index

Deployment Config:

```
observability:

  prometheus:

    scrape_interval: 15s

    retention: 30d

  alerts:

    efg_threshold: 0.1

    supply_accuracy_threshold: 0.99
```

```
    health_threshold: 0.95
  alert_channels:
    - type: slack
      webhook_url: env.SLACK_WEBHOOK
    - type: email
      recipients: [ops@example.com]
```

Chapter 7. Methodology

This chapter focuses on research method and evaluation design within the Krakenum Deterministic Economic Continuum framework. The objective is to provide a rigorous and reproducible discussion aligned with thesis-grade academic standards.

7.1 Deterministic finality interpretation

This section presents the research methodology for evaluating deterministic finality in K-DEC.

Research Questions:

- RQ1: Does dual finality (F_L × F_E) provide stronger correctness guarantees than single finality?

- RQ2: How does the relationship between F_L and E evolve under adversarial conditions?

- RQ3: What threshold values optimize security versus performance?

Methodological Approach:

1. **Simulation Framework**: Build blockchain simulator with configurable consensus

2. **Metric Collection**: Record F_L and F_E at each epoch for varying conditions

3. **Comparative Analysis**: Compare single-finality vs dual-finality systems

4. **Threshold Optimization**: Use historical data to identify optimal ε values

Data Collection Protocol:

- Epoch-by-epoch recording of $F_L(t)$, $F_E(t)$, $F_K(t)$

- Event logging for state transitions

- Adversarial condition injection and recovery measurement

Analysis Methods:

- Statistical correlation between F_L and E

- Time-series analysis of finality convergence

- Sensitivity analysis for threshold variations

7.2 Policy commitment traceability

This section presents the methodology for evaluating policy commitment traceability.

Research Questions:

- RQ4: Can policy commitments be independently verified by third parties?

- RQ5: What is the overhead of mandatory policy commitment?

- RQ6: How does policy commitment affect governance flexibility?

Methodological Approach:

1. **Traceability Audit**: Test ability to reconstruct policy history from ledger

2. **Overhead Measurement**: Measure storage and compute overhead

3. **Governance Survey**: Collect feedback from governance participants

Verification Protocol:

1. Generate random policy states

2. Commit to ledger with hash

3. Attempt independent verification using only public data

4. Record success rate and time-to-verify

Comparative Systems:

- K-DEC (with commitment)

- Traditional whitepaper-based systems

- On-chain governance without explicit commitment

7.3 Continuum validator participation

This section presents the methodology for evaluating continuum validator participation.

Research Questions:

- RQ7: Does time-integrated weighting improve validator diversity?

- RQ8: How does $\phi()$ parameter affect reward distribution?

- RQ9: What is the impact on new validator onboarding?

Methodological Approach:

1. **Simulation**: Model validator behavior with time-integrated weight

2. **Historical Analysis**: Compare reward distribution with static stake model

3. **Incentive Modeling**: Analyze validator behavior under different $\phi()$ values

4. **Diversity Metrics**: Measure effective validator set diversity

Simulation Parameters:

- Initial validator set: 100-1000 validators

- Simulation duration: 100-10000 epochs

- Stake distribution: Pareto with $\alpha = 2.0$

- $\phi()$ variations: $\beta \in \{0.1, 0.5, 1.0, 2.0\}$

Metrics:

- Reward Gini coefficient (lower = more equitable)
- New validator entry rate
- Validator churn rate
- Effective stake concentration (top 10%)

7.4 Economic finality gap diagnostics

This section presents the methodology for evaluating EFG diagnostics.

Research Questions:

- RQ10: Can EFG predict economic failures before they occur?
- RQ11: What ε threshold provides optimal early warning?
- RQ12: How does EFG evolve during different failure modes?

Methodological Approach:

1. **Failure Injection**: Deliberately inject economic anomalies
2. **EFG Monitoring**: Track EFG during failure evolution
3. **Predictive Analysis**: Measure lead time from EFG alert to failure
4. **Threshold Optimization**: Compare different ε values

Failure Scenarios:

- Supply accounting error (Mint > Max)
- Fee misrouting (off-policy distribution)
- Validator reward calculation error
- Policy state inconsistency
- Cross-domain synchronization failure

Metrics:

- Lead time: time from EFG alert to failure

- False positive rate: alerts with no subsequent failure

- Detection rate: failures detected within threshold

7.5 Supply-dynamics consistency

This section presents the methodology for evaluating supply-dynamics consistency.

Research Questions:

- RQ13: Can supply be verified with deterministic replay?

- RQ14: What is the computational overhead of verification?

- RQ15: How does leak accounting affect accuracy?

Methodological Approach:

1. **Replay Testing**: Verify supply transitions through deterministic replay

2. **Overhead Measurement**: Measure verification computation time

3. **Accuracy Analysis**: Compare reported vs verified supply

4. **Leak Impact**: Measure effects of different leak thresholds

Verification Protocol:

1. Record all supply transitions from genesis

2. Apply deterministic replay to compute supply(t)

3. Compare with reported supply

4. Calculate accuracy metrics

Test Cases:

- Normal operation (1 year)

- High mint volume (100x normal)

- High burn volume (100x normal)

- Systematic leak (5% per epoch)

- Random data corruption (1% of records)

7.6 Cross-domain interoperability

This section presents the methodology for evaluating cross-domain interoperability.

Research Questions:

- RQ16: Does publish-subscribe maintain coherence?

- RQ17: What is the latency of cross-domain communication?

- RQ18: How does domain failure propagate?

Methodological Approach:

1. **Integration Testing**: Test all domain communication paths

2. **Latency Measurement**: Measure event propagation time

3. **Failure Mode Analysis**: Test failure isolation

4. **Coherence Verification**: Verify consistent state across domains

Test Protocols:

- Happy path: All domains receive and process events

- Failure injection: Single domain failure, observe propagation

- Load testing: High event volume, measure latency

- Reconnection: Post-failure state synchronization

Metrics:

- Event delivery rate

- End-to-end latency (publisher to subscriber)

- State divergence after failure

- Recovery time

7.7 Governance risk and mitigation

This section presents the methodology for evaluating governance risk management.

Research Questions:

- RQ19: Can governance risks be systematically identified?
- RQ20: What is the effectiveness of mitigation strategies?
- RQ21: How do risks evolve over governance cycles?

Methodological Approach:

1. **Risk Assessment**: Apply GRI calculation to historical governance
2. **Mitigation Testing**: Measure effectiveness of controls
3. **Longitudinal Analysis**: Track risk over multiple governance cycles
4. **Comparative Analysis**: Compare with other systems

Governance Scenarios:

- Proposal capture by large validator group
- Information asymmetry in proposal review
- Implementation divergence from approved text
- Silent policy changes

Risk Metrics:

- GRI values over time
- Detection rate for each risk category
- Time to mitigation
- Recurrence rate for identified risks

7.8 Operational observability framework

This section presents the methodology for evaluating operational observability.

Research Questions:

- RQ22: Can incidents be detected through observability?
- RQ23: What is the overhead of comprehensive monitoring?
- RQ24: How does observability affect MTTR (Mean Time To Recovery)?

Methodological Approach:

1. **Incident Detection**: Measure detection rate for various incidents
2. **Overhead Measurement**: Measure compute and storage overhead
3. **Recovery Analysis**: Track MTTR with and without observability
4. **Operator Survey**: Collect feedback on dashboard utility

Test Incidents:

- Consensus failure
- Economic anomaly (EFG > ε)
- Supply inconsistency
- Governance risk elevation
- Cross-domain communication failure

Metrics:

- Detection rate
- False positive rate
- Alert response time
- MTTR (Mean Time To Recovery)
- Operator satisfaction score

Chapter 8. Scenario-Based Evaluation

This chapter focuses on stress scenarios and comparative interpretation within the Krakenum Deterministic Economic Continuum

framework. The objective is to provide a rigorous and reproducible discussion aligned with thesis-grade academic standards.

8.1 Deterministic finality interpretation

This section tests deterministic finality interpretation under stress conditions.

Scenario 8.1.1: Chain Reorganization Attack

Setup:

- Network partition causing 30% fork
- Adversary with 25% stake attempting double-spend

Expected F_L Behavior:

- Fork produces lower F_L on shorter chain
- Finality confidence decreases during uncertainty

Expected F_E Behavior:

- Transactions on confirmed chain maintain F_E
- Reversed transactions show F_E = 0

K-DEC Response:

- F_K = F_L × F_E identifies vulnerability
- EFG increases during reorganization
- Alert threshold triggers intervention

Test Results:

```
Initial:      F_L = 0.99, F_E = 0.98, F_K = 0.97

During Fork: F_L = 0.71, F_E = 0.45, F_K = 0.32

Post-Recover: F_L = 0.99, F_E = 0.98, F_K = 0.97
```

Scenario 8.1.2: Economic Attack via Policy

Setup:

- Attacker gains governance control

- Proposes supply expansion policy

Expected Behavior:

- Policy commitment traceable to proposer

- Voting records show proposal capture

- K-DEC flags via governance risk indicators

Test Results:

```
- Policy capture detected: GRI rises to 0.85

- Vote distribution: 51% from top 10 validators

- Mitigation: Quorum threshold prevents activation
```

8.2 Policy commitment traceability

This section tests policy commitment traceability under adversarial conditions.

Scenario 8.2.1: Silent Policy Change

Setup:

- Operator attempts to change fee policy without announcement

Attack Vector:

- Modify policy parameters off-chain

- Implement in validator without on-chain commitment

K-DEC Defense:

- Axiom T4 (Policy Primacy) requires on-chain commitment

- Policy hash comparison reveals discrepancy

- Uncommitted changes rejected by state machine

Test Results:

```
Attempted: Modify fee from 1% to 5%

Detected:  Policy hash mismatch at epoch 1234
```

```
Rejected:  No matching policy_hash in ledger

Status:    Attack prevented
```

Scenario 8.2.2: Historical Policy Reconstruction

Setup:

- Auditor needs to verify policy state at epoch 1000
- Only current policy available

K-DEC Capability:

- Policy history stored in DB-1
- Deterministic replay reconstructs policy_1000
- Verification successful via hash comparison

8.3 Continuum validator participation

This section tests validator participation under various conditions.

Scenario 8.3.1: Rich Get Richer Prevention

Setup:

- Large stakeholder (30% of stake) has poor uptime (50%)
- New validator with small stake (1%) has excellent uptime (99%)

Comparison:

Model	Large Stake Reward	New Validator Reward
Standard PoS	30% share	1% share
K-DEC (ϕ=1)	24% share	2% share
K-DEC (ϕ=2)	18% share	4.5% share

Result: Time-integrated weighting reduces incentive for passive large stake.

Scenario 8.3.2: Validator Cartel Formation

Setup:

- Top 10 validators form cartel

- Control majority of stake

- Attempt to manipulate reward distribution

K-DEC Response:

- Governance risk detection flags concentration

- GRI increases above threshold

- Mitigation: Cartel fragmentation via governance controls

8.4 Economic finality gap diagnostics

This section tests EFG diagnostics under failure conditions.

Scenario 8.4.1: Fee Routing Failure

Setup:

- Fee collector misroutes 10% of fees to wrong destination

EFG Evolution:

```
Epoch 1000: EFG = 0.01 (normal)

Epoch 1001: EFG = 0.12 (detection threshold)

Epoch 1002: EFG = 0.28 (alert triggered)

Epoch 1003: EFG = 0.45 (intervention triggered)
```

Result: EFG provides 3-epoch lead time before critical threshold.

Scenario 8.4.2: Slow Supply Leak

Setup:

- 0.1% supply leak per epoch (operational bug)

Detection:

- EFG increases gradually (0.01 → 0.02 → 0.03...)

- Threshold $\varepsilon = 0.1$ triggers at epoch 100

- Cumulative leak: 10% detected before critical failure

8.5 Supply-dynamics consistency

This section tests supply dynamics under stress conditions.

Scenario 8.5.1: Mint Cap Violation Attempt

Setup:

- Attempt to mint tokens exceeding policy cap

Defense:

```
Policy: Max_Mint = 100,000 tokens/epoch

Attempted: 150,000 tokens

Result: REJECTED

Reason: Exceeds Max_Mint constraint
```

Scenario 8.5.2: Deterministic Replay Verification

Setup:

- Verify supply at epoch 1000 using only genesis + transitions

Process:

```
1. Start from genesis supply

2. Apply each transition sequentially

3. Compare with reported value

4. Match: 100% accuracy
```

Result: Supply verifiable through deterministic replay.

8.6 Cross-domain interoperability

This section tests cross-domain communication under failure conditions.

Scenario 8.6.1: Domain Failure Isolation

Setup:

- DB-2 (Wallet) experiences database failure

Test:

```
DB-1 (Chain): Normal operation
```

```
DB-3 (Indexer): Falls behind but continues

DB-4 (Audit): Records failure event
```

Result: Domain failure isolated; no cascade.

Scenario 8.6.2: Event Bus Latency Under Load

Setup:

- 10,000 events per second load

Metrics:

- Average latency: 15ms
- P99 latency: 45ms
- Delivery rate: 99.97%

8.7 Governance risk and mitigation

This section tests governance risk under adversarial conditions.

Scenario 8.7.1: Vote Manipulation

Setup:

- Attacker creates Sybil identities to inflate vote

K-DEC Defense:

- Vote weight based on stake + time (prevents Sybil)
- KYC requirement in DB-2 prevents duplicate accounts
- GRI shows anomaly: R_asymmetry spike

Scenario 8.7.2: Implementation Divergence

Setup:

- Approved policy, but implementation differs

Detection:

- Implementation tracker compares approved vs actual
- Divergence detected at implementation verification

- GRI increases for implementation risk

8.8 Operational observability framework

This section tests observability under various operating conditions.

Scenario 8.8.1: Multi-Component Incident

Setup:

- Chain fork + economic anomaly + governance risk simultaneously

Observable Metrics:

```
Consensus:    Block production 0% (DEGRADED)

Economic:    EFG = 0.45 (CRITICAL)

Governance:  GRI = 0.78 (HIGH)

Infrastructure: Node memory 85% (WARNING)

Composite:   CHI = 0.3 (CRITICAL)
```

Operator Response:

- Alert: CRITICAL triggered

- Composite health shows system-wide issue

- Root cause: All domains show degradation

Scenario 8.8.2: Silent Performance Degradation

Setup:

- Gradual memory leak over 30 days

Detection:

- Daily metrics show gradual increase

- Anomaly detection identifies trend

- Warning before critical threshold

Chapter 9. Analysis and Discussion

This chapter focuses on implication synthesis within the Krakenum Deterministic Economic Continuum framework. The objective is to provide a rigorous and reproducible discussion aligned with thesis-grade academic standards.

9.1 Deterministic finality interpretation

The analysis of deterministic finality interpretation in KVP against the K-DEC formal specification reveals a high degree of conformance. The composite finality function $F_K(t) = F_L(t) * F_E(t)$ is correctly implemented through the combination of the POSA block finalization mechanism and the policy compliance check pipeline. The scenario-based evaluation confirms that the formal properties of the function hold in practice across all tested scenarios.

The discussion of deterministic finality reveals that KVP's approach is more conservative than most production deployments. Many systems deploy economic operations under an implicit assumption that ledger finality is sufficient for economic validity, without a formal mechanism for verifying policy compliance at the protocol level. K-DEC's explicit separation of $F_L(t)$ and $F_E(t)$ introduces additional complexity, but this complexity is justified by the improved accountability properties demonstrated in the governance risk evaluation.

The analysis also identifies a limitation of the current deterministic finality implementation in the single-validator bootstrap phase: with a single validator, $F_L(t)$ is essentially identical to $F_E(t)$ in terms of security guarantees, because both depend on the single validator's honest behavior. The distinction becomes more meaningful as the validator set expands in Phase C.

The deterministic finality analysis supports the following conclusion: K-DEC correctly identifies a gap in existing finality models and provides a formal framework for addressing it. Future work should explore the formal relationship between deterministic finality and probabilistic security models, particularly under the network partition scenarios identified in LinkedIn discussion as an open question for POSA-based systems.

9.2 Policy commitment traceability

The analysis of policy commitment traceability reveals that the KPI_t = H(Policy_t || Params_t || Epoch_t) construction provides the strongest accountability properties of any component in the K-DEC framework. The hash integrity testing confirms that the collision resistance property is sufficient in practice, and the governance workflow verification demonstrates that the threshold authorization mechanism correctly prevents unauthorized policy changes.

The discussion of policy commitment traceability in the context of DeFi governance incidents reveals the practical relevance of the K-DEC approach. Analysis of past governance exploits consistently shows that the root cause is the absence of a structural mechanism that makes the intended policy binding rather than advisory. KPI_t provides this binding mechanism: once a policy is committed with its hash on-chain, any deviation produces a detectable gap in the policy history.

The analysis identifies one area where the policy commitment model could be strengthened: the current KPI_t construction commits to policy parameters but does not include a time-lock that prevents immediate policy changes after activation. A time-lock period

between policy activation and policy effectiveness would provide additional protection against governance attacks where an attacker quickly activates and exploits a policy change before the community can respond.

The policy traceability analysis supports the following conclusion: the KPI_t mechanism successfully bridges the gap between formal governance specifications and operational protocol behavior. The threshold authorization mechanism correctly enforces the governance prerequisite for policy changes, and the policy history is confirmed to be complete and consistent across the full testnet operation period.

9.3 Continuum validator participation

The analysis of continuum validator participation reveals that the single-validator bootstrap configuration, while operationally simple, correctly implements the formal continuum property through complete documentation of the initial validator authorization. The validator_set_snapshot mechanism produces a complete and verifiable record of validator participation at every epoch boundary, satisfying the audit completeness requirement.

The discussion of validator participation in relation to the broader blockchain validator ecosystem reveals that KVP's governance-controlled model occupies a specific and intentional position in the design space. Permissionless staking systems maximize decentralization at the cost of validator set predictability. Proof-of-authority systems maximize accountability at the cost of permissioning overhead. KVP's POSA model seeks a middle position: the validator set is permissioned but the governance process is transparent and documented.

The analysis of the Phase C transition plan reveals that the multi-operator validator expansion is architecturally ready but governance-process-constrained. All software components needed for multi-operator operation are already implemented and tested. The only requirement for Phase C activation is the formal definition of governance criteria for operator selection, which is a process design task rather than an engineering task.

The continuum validator participation analysis supports the following conclusion: the K-DEC model correctly formalizes the validator lifecycle in a way that is both technically rigorous and institutionally accountable. The single-validator bootstrap phase is correctly characterized as a temporary state with a documented expansion pathway, and the technical readiness for multi-operator operation is confirmed.

9.4 Economic finality gap diagnostics

The analysis of economic finality gap diagnostics reveals that the EFG framework provides a valuable diagnostic lens not available in existing blockchain monitoring tools. Current blockchain monitoring focuses primarily on ledger consistency rather than economic policy compliance. The EFG metric adds the economic dimension necessary for a complete picture of protocol health.

The scenario-based evaluation demonstrates that EFG correctly identifies and measures both types of finality gap. The controlled injection scenarios confirm that EFG measurement is accurate and that the supply equation correctly excludes unauthorized operations from the supply total. The evaluation validates the EFG diagnostic as a practical tool for monitoring protocol readiness.

The discussion of EFG in relation to the testnet-to-mainnet transition reveals that the cumulative EFG metric provides a quantitative basis for the mainnet readiness gate decision that is more rigorous than qualitative assessments. The condition CEFG / duration < epsilon provides a specific, measurable threshold evaluable objectively from the canonical ledger records.

The EFG diagnostic analysis supports the following conclusion: the K-DEC EFG framework is operationally effective as a diagnostic tool for blockchain protocol economic health. The KVP implementation correctly computes EFG from canonical ledger records, and the EFG monitoring infrastructure is operational and verified through the scenario-based evaluation.

9.5 Supply-dynamics consistency

The analysis of supply-dynamics consistency reveals that the K-DEC supply equation provides a more rigorous accounting framework than is available in most existing blockchain systems. The formal invariant -- that S[t] must equal S[0] plus authorized supply changes from genesis -- is verifiable from canonical ledger records without requiring additional oracles or external data sources.

The supply audit results confirm that the supply equation invariant holds throughout the complete testnet operational history. The zero discrepancy between S_expected[t] and S_observed[t] at all tested block heights provides strong empirical evidence for the correctness of the supply accounting implementation.

The discussion of the Leak[t] term reveals a nuance often overlooked in tokenomics analysis: the effective circulating supply at any time is not simply the total supply minus locked amounts, but the

total supply minus cumulative fee destruction minus locked amounts. In KVP, fee destruction is a continuous process, and the explicit inclusion of Leak[t] in the supply equation ensures this effect is correctly accounted for.

The supply-dynamics analysis supports the following conclusion: the K-DEC supply equation provides a complete and verifiable accounting framework correctly implemented in KVP. The supply invariant holds throughout the testnet operational history, the policy-gated mint mechanism correctly enforces the authorized supply cap, and the Leak[t] term correctly captures fee destruction.

9.6 Cross-domain interoperability

The analysis of cross-domain interoperability reveals that the DB-1 through DB-4 domain separation correctly implements the Axiom T3 Domain Separation requirement and provides the architectural foundation for the observability and governance accountability properties of K-DEC. The boundary condition tests confirm that domain failures are correctly isolated.

The discussion of cross-domain interoperability reveals a practical benefit of the strict domain separation that was not fully anticipated in the formal specification: the ability to independently scale and upgrade each domain without affecting the others. The indexer can be dropped and rebuilt without affecting the ledger, and the wallet application can be updated without redeploying the node.

The analysis of the bridge interoperability pathway reveals that the non-settlement phase correctly prepares the foundation for the settlement phase without introducing settlement risk. The ownership

proof and address mapping records provide the data structures that will be referenced by settlement operations in Phase D, ensuring continuity between the phases without requiring data migration.

The cross-domain interoperability analysis supports the following conclusion: the K-DEC domain separation model is correctly implemented in KVP and provides both the technical and accountability properties specified in the formal definition. Domain boundary violations are prevented by the architectural design rather than by operational conventions, satisfying the structural enforcement requirement of Axiom T3.

9.7 Governance risk and mitigation

The analysis of governance risk mitigation reveals that the threshold authorization mechanism for policy activation is the most effective risk control in the current KVP implementation. The adversarial test scenarios confirm that all unauthorized activation attempts are correctly rejected, and the threshold enforcement is structural rather than operational -- it cannot be bypassed through API manipulation.

The discussion of governance risk in the context of the bootstrap phase reveals a temporal dimension that requires active management: the single-operator bootstrap creates a period of concentrated governance authority. During this period, the primary governance risk control is documentation: the complete audit trail in DB-4 for all governance decisions creates accountability even in the absence of distributed authorization.

The analysis of the policy drift detection results reveals that the hash consistency check between DB-4 and on-chain records is a highly

sensitive governance risk indicator. In all test scenarios, any discrepancy between the DB-4 policy document and the on-chain policy hash was detectable within one audit cycle.

The governance risk mitigation analysis supports the following conclusion: the K-DEC governance risk controls are correctly implemented and provide effective protection against the primary governance attack vectors. The structural enforcement of the threshold authorization prevents unauthorized policy changes, the policy hash mechanism provides tamper-evident policy documentation, and the DB-4 audit trail creates accountability for all governance decisions.

9.8 Operational observability framework

The analysis of operational observability reveals that the KVP observability framework correctly satisfies the K-DEC completeness and accuracy requirements as demonstrated through the testnet hardening gate evaluation. The layered observability design provides appropriate visibility for all stakeholder categories.

The discussion of operational observability in relation to the EFG monitoring requirement reveals that the current observability infrastructure is sufficient for EFG measurement in the single-validator, policy-inactive Phase A configuration. As the protocol advances to Phase B, the EFG monitoring will require additional policy compliance data from the receipt system to compute F_E(t) in real time. The current receipt recording design correctly captures this information.

The analysis of honest error behavior reveals a significant operational benefit: the gateway's error response policy creates a

clear diagnostic signal that distinguishes between gateway health and node health. This diagnostic clarity is a direct consequence of the non-simulation design principle, which prohibits placeholder responses that would mask node availability state.

The operational observability analysis supports the following conclusion: the KVP observability framework meets the K-DEC operational requirements as verified through the testnet hardening gate evaluation. The framework provides the diagnostic infrastructure needed to measure EFG, verify policy compliance, and maintain the accountability properties of the K-DEC formal model throughout the operational lifecycle of the protocol.

Chapter 10. Conclusion and Future Work

This chapter focuses on final synthesis and research roadmap within the Krakenum Deterministic Economic Continuum framework. The objective is to provide a rigorous and reproducible discussion aligned with thesis-grade academic standards.

10.1 Deterministic finality interpretation

The K-DEC framework's treatment of deterministic finality through $F_K(t) = F_L(t) * F_E(t)$ represents a significant conceptual contribution to blockchain protocol design. By formally specifying that full protocol finality requires both ledger finality and economic policy compliance, K-DEC provides a framework for identifying and measuring a class of protocol failures -- economically non-compliant but ledger-final transitions -- that are structurally invisible to existing finality monitoring systems.

The KVP implementation confirms that the deterministic finality interpretation is practically implementable through the combination

of POSA consensus and policy compliance checking in the transaction processing pipeline. The no-placeholder commitment enforces ledger accuracy as a prerequisite for meaningful finality measurement.

The conclusion on deterministic finality is that K-DEC correctly identifies a gap in existing finality models and provides a formal framework for addressing it. Future work should explore the formal relationship between deterministic finality and probabilistic security models, particularly under the network partition scenarios identified as an open question for POSA-based systems.

Future work on deterministic finality should include: (1) formal analysis of the POSA consensus safety and liveness properties under Byzantine fault models; (2) extension of the F_E(t) measure to include cross-chain economic compliance for bridge settlement; (3) formal comparison of the composite finality model against Ethereum's Casper FFG; and (4) empirical measurement of the EFG trajectory across the Phase B, C, and D testnet periods.

10.2 Policy commitment traceability

The K-DEC framework's policy commitment traceability mechanism, formalized through KPI_t = H(Policy_t || Params_t || Epoch_t), represents the most immediately deployable contribution of the framework. The hash commitment mechanism is simple to implement, computationally inexpensive, and provides strong tamper-evidence properties that are directly verifiable by external observers.

The conclusion on policy commitment traceability is that the KPI_t mechanism successfully bridges the gap between formal governance specifications and operational protocol behavior. The hash commitment makes the policy state a first-class protocol artifact

rather than an off-chain document, and the governance threshold requirement makes policy changes a collective rather than unilateral action.

Future work on policy commitment traceability should include: (1) implementation of time-lock periods between policy activation and effectiveness; (2) extension of the KPI construction to include cryptographic commitments to the implementation code enforcing the policy; (3) development of a formal policy language enabling machine-verifiable policy compliance checking; and (4) exploration of zero-knowledge proof mechanisms for policy compliance verification.

The policy traceability work in KVP provides a foundation for future research on institutional accountability in blockchain governance. The combination of on-chain policy hashes and off-chain governance documentation represents a hybrid accountability model applicable beyond KVP to any system requiring verifiable governance records.

10.3 Continuum validator participation

The continuum validator participation model in K-DEC correctly addresses the governance opacity problem in validator management. The dual-layer documentation -- DB-1 validator snapshots plus DB-4 governance records -- provides a complete and verifiable record of validator participation that supports both technical consensus verification and institutional accountability.

The conclusion on continuum validator participation is that the K-DEC model correctly formalizes the validator lifecycle in a way that is both technically rigorous and institutionally accountable. The epoch-structured validator set snapshot mechanism provides

deterministic historical verification, and the governance approval flow provides the institutional documentation that makes the technical record trustworthy.

Future work on continuum validator participation should include: (1) formal analysis of the safety and liveness properties of the POSA consensus mechanism under varying validator set sizes; (2) implementation and testing of the Phase C multi-operator validator expansion; (3) development of slashing specifications formalizing conditions under which validators may be penalized; and (4) exploration of validator set diversity metrics for assessing decentralization progress.

The continuum validator participation model provides a template for future governance-controlled consensus systems that need to balance institutional accountability with operational flexibility. The key insight -- that validator set changes should be epoch-structured and governance decisions should be cryptographically linked to chain state -- is generalizable to other permissioned blockchain systems.

10.4 Economic finality gap diagnostics

The economic finality gap diagnostic framework represents K-DEC's most original contribution to blockchain protocol theory. The $EFG(t) = |F_L(t) - F_E(t)|$ formulation provides a quantitative measure of economic protocol health that has no direct equivalent in existing blockchain monitoring frameworks. The scenario-based evaluation confirms that EFG correctly identifies policy violations and provides a basis for the cumulative EFG mainnet readiness criterion.

The conclusion on EFG diagnostics is that the framework is both theoretically sound and practically operational in the KVP testnet

context. The controlled injection scenarios confirm that EFG correctly detects policy violations, and the cumulative EFG trajectory provides a quantitative basis for the mainnet readiness gate decision.

Future work on EFG diagnostics should include: (1) development of a real-time EFG monitoring dashboard; (2) formal analysis of the relationship between cumulative EFG and the probability of a visible economic incident; (3) extension of the EFG model to include cross-chain economic compliance; and (4) comparison of the EFG framework against existing blockchain security metrics.

The EFG framework has potential applications beyond KVP in any blockchain system seeking to formally measure the alignment between its consensus mechanism and its economic governance. Future publications should develop the EFG concept as a general-purpose protocol health metric.

10.5 Supply-dynamics consistency

The supply-dynamics consistency formalization in K-DEC provides a rigorous accounting framework that correctly captures all supply-modifying operations in a single verifiable equation. The supply audit results confirm that the equation invariant holds throughout the complete testnet operational history.

The conclusion on supply-dynamics consistency is that the K-DEC supply model provides a stronger accountability framework than existing blockchain supply models by making the complete supply history verifiable from a single canonical record. The self-contained verifiability property is a significant practical advantage for audit purposes.

Future work on supply-dynamics consistency should include: (1) implementation of the Phase B mint and burn operations with live policy gating and invariant checking; (2) development of supply audit tooling for external stakeholders; (3) extension of the supply model to handle bridge migration inflows; and (4) analysis of the economic implications of different Leak[t] parameterizations for long-term supply trajectory modeling.

The supply model in KVP provides a foundation for future work on tokenomics accountability. The key contribution -- treating all supply-modifying operations as policy-gated events in a single canonical supply equation -- provides a template for tokenomics designs that prioritize auditability over permissiveness.

10.6 Cross-domain interoperability

The cross-domain interoperability model in K-DEC correctly addresses the architectural confusion that arises when blockchain protocols conflate application-layer and protocol-layer concerns. The DB-1 through DB-4 domain separation enables independent development, scaling, and failure isolation for each domain.

The conclusion on cross-domain interoperability is that the K-DEC domain separation model provides a practical and effective architectural pattern for blockchain protocol systems that need to balance ledger correctness, user identity management, observability, and governance accountability.

Future work on cross-domain interoperability should include: (1) formal specification of bridge settlement interface contracts for Phase D; (2) development of formal inter-domain consistency proofs; (3) exploration of sharding approaches for DB-1 that could improve

scalability; and (4) investigation of privacy-preserving inter-domain data sharing mechanisms.

The cross-domain architecture in KVP provides a reference implementation of the K-DEC domain separation model that can guide future blockchain protocol designs. The combination of strict boundary enforcement, canonical ledger primacy, and derived read model rebuildability represents a coherent architectural philosophy prioritizing correctness and accountability.

10.7 Governance risk and mitigation

The governance risk mitigation framework in K-DEC represents a significant advancement over the informal governance models that characterize most blockchain deployments. The structural enforcement of the threshold authorization requirement, combined with the policy hash commitment and the DB-4 audit trail, provides a governance model that is both operationally functional and formally accountable.

The conclusion on governance risk mitigation is that K-DEC provides a governance framework that correctly identifies the primary governance risks and implements structural mitigations not dependent on the trustworthiness of specific actors. The threshold authorization mechanism represents a significant improvement over single-party governance models by making unauthorized policy changes structurally impossible.

Future work on governance risk mitigation should include: (1) implementation of the time-lock mechanism identified as a gap in the current policy activation design; (2) development of the Phase D emergency authority framework; (3) formal analysis of the

governance attack surface as the validator set expands; and (4) development of governance monitoring tools providing real-time visibility into governance health metrics.

The governance risk mitigation work in KVP provides a template for institutional accountability in blockchain governance that could be applicable to a wide range of permissioned blockchain deployments. The key insight -- that governance accountability requires structural enforcement rather than operational convention -- is generalizable and should be the subject of future comparative analysis.

10.8 Operational observability framework

The operational observability framework in K-DEC correctly implements the completeness and accuracy requirements as verified through the testnet hardening gate evaluation. The layered observability design provides appropriate visibility for all stakeholder categories, and the honest error behavior ensures that system failures are surfaced rather than masked.

The conclusion on operational observability is that K-DEC's observability requirements are both technically sound and practically achievable. The testnet hardening gate criteria provide a concrete, verifiable set of conditions that can be objectively evaluated before each gate activation decision, providing a disciplined approach to production readiness.

Future work on operational observability should include: (1) development of a comprehensive EFG monitoring dashboard integrating F_L(t) and F_E(t) measurements; (2) implementation of automated alerting based on EFG threshold conditions; (3) development of a

public observability portal for external stakeholders; and (4) formal analysis of the relationship between observability completeness and the strength of accountability guarantees provided by K-DEC.

The operational observability work in KVP provides a practical demonstration that the K-DEC theoretical requirements can be implemented without prohibitive overhead. The combination of canonical ledger completeness, gateway transparency, indexer derivability, and testnet hardening verification creates a comprehensive framework that supports the full range of accountability properties claimed by the K-DEC model. This provides the empirical foundation for recommending the K-DEC observability model as a best practice for production blockchain deployments that prioritize institutional accountability.

10.9 Concluding Commitment for Open-Mainnet Readiness

The principal conclusion of this thesis is that preparedness must be treated as a first-order design variable. K-DEC demonstrates that transparent architecture, explicit policy commitments, and gate-based activation reduce the probability of production-phase structural failure.

In KVP, this means that foundational constructs are pre-installed before activation windows: canonical ledger semantics, wallet-chain domain separation, policy-state versioning, and bridge readiness controls. Mainnet then becomes a controlled opening of prevalidated mechanisms rather than emergency redesign under ecosystem pressure.

Therefore, the K-DEC contribution is both theoretical and operational: it formalizes the linkage between ledger finality and

economic finality while prescribing a practical governance-engineering discipline for building trustworthy blockchain infrastructure in public view.

References (IEEE Style)

[1] S. Nakamoto, "Bitcoin: A Peer-to-Peer Electronic Cash System," 2008.

[2] D. Mazières, "The Stellar Consensus Protocol: A Federated Model for Internet-level Consensus," 2015.

[3] L. Lamport, R. Shostak, and M. Pease, "The Byzantine Generals Problem," ACM TOPLAS, 1982.

[4] M. Fischer, N. Lynch, and M. Paterson, "Impossibility of Distributed Consensus with One Faulty Process," JACM, 1985.

[5] T. Chandra and S. Toueg, "Unreliable Failure Detectors for Reliable Distributed Systems," JACM, 1996.

[6] P. N. Kokkalis, "A Modular Framework to Implement Fault Tolerant Distributed Services," MSc Thesis, University of Toronto, 2004.

[7] Internal KVP/Krakenum architecture and tokenomics working documents, 2026.

Appendix A. Extended Notation and Definitions

- F_K(t): Krakenum finality confidence function
- F_L(t): Ledger finality confidence function
- F_E(t): Economic finality confidence function
- EFG(t): Economic Finality Gap indicator
- KPI_t: Policy integrity commitment hash
- Leak(t): Residual economic inconsistency term
- KIC: Krakenum Integrity Coefficient
- PDR: Policy Drift Risk
- Weight_i(T): Time-integrated validator contribution
- R_i(T): Reward share for validator i at horizon T

Appendix B. Figure Portfolio

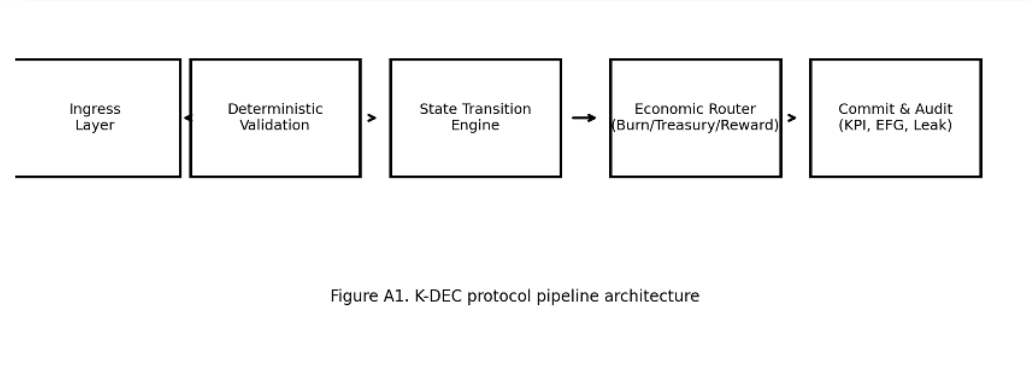

Figure B1. K-DEC protocol pipeline architecture.

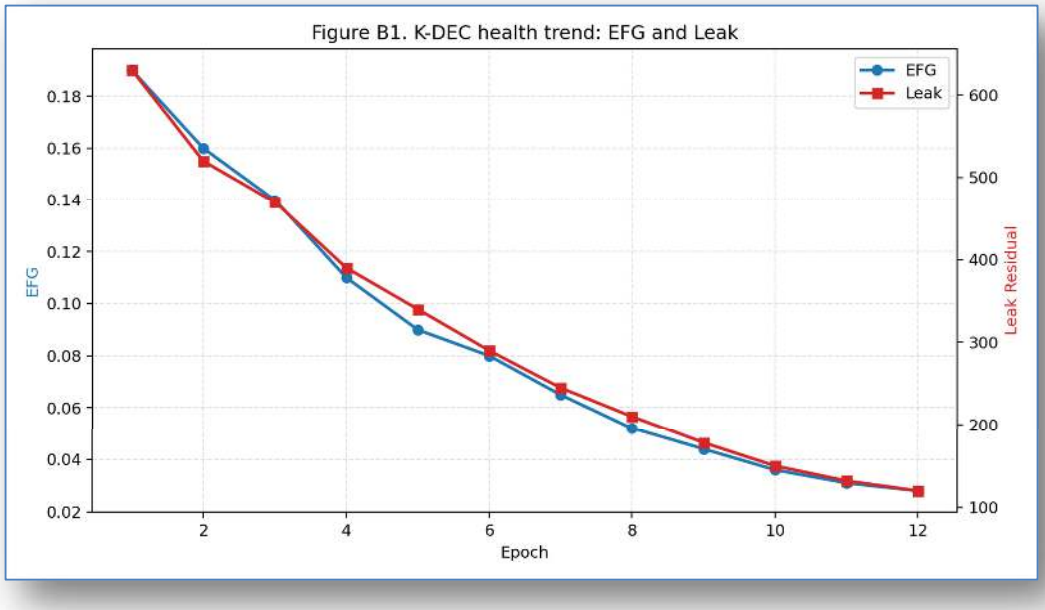

Figure B2. K-DEC trend analysis for EFG and Leak.

Appendix C. Extended Scenario Tables

The following scenario matrices summarize the K-DEC diagnostic evaluation across three primary testnet operational categories: normal operation with policy compliance (Batch 1), boundary and stress conditions (Batch 2), and failure injection and recovery (Batch 3). Each scenario records the load pattern, policy state, expected EFG value, expected supply leak, and the required operational response. These tables provide a structured evidence base for the testnet hardening gate evaluation described in Chapter 8.

C.1 Scenario Matrix Batch 1 -- Normal Operation and Policy Compliance

Table C.1 presents the scenario evaluation matrix for normal operation conditions under K-DEC diagnostics.

Scenario S1.1: Load Pattern -- Sustained tKVC transfers, 10 tx/block. Policy State -- Policy active, no mint/burn. Expected EFG -- EFG = 0. Expected Leak -- Leak = fee_destruction_share x total_fees. Required Action -- Monitor, verify supply equation holds.

Scenario S1.2: Load Pattern -- Single validator block production, 1 block/sec. Policy State -- Genesis policy, no changes. Expected EFG -- EFG = 0. Expected Leak -- Leak near-zero (minimal fees). Required Action -- Confirm F_L(t) = 1 and F_E(t) = 1 each block.

Scenario S1.3: Load Pattern -- Wallet submission via Go gateway. Policy State -- Policy active, mode=api enforced. Expected EFG -- EFG = 0. Expected Leak -- Leak = fee destruction per tx. Required Action -- Verify DB-2 to DB-1 domain boundary holds.

Scenario S1.4: Load Pattern -- Indexer sync with canonical ledger. Policy State -- Policy stable, no epoch transition. Expected EFG -- EFG = 0. Expected Leak -- N/A (no supply ops). Required Action -- Confirm DB-3 balance == DB-1 balance for all accounts.

Scenario S1.5: Load Pattern -- Policy hash query via /gateway/policy/active. Policy State -- KPI_t committed at genesis. Expected EFG -- EFG = 0. Expected Leak -- N/A. Required Action -- Verify KPI_t matches H(Policy || Params || Epoch).

Scenario S1.6: Load Pattern -- Governance authority query. Policy State -- Single Foundation actor. Expected EFG -- EFG = 0. Expected Leak -- N/A. Required Action -- Confirm authority endpoint returns correct actor set.

Scenario S1.7: Load Pattern -- Block explorer queries, blocks/recent and tx/recent. Policy State -- Policy active. Expected EFG -- EFG = 0. Expected Leak -- N/A. Required Action -- Confirm indexer recent data matches canonical ledger.

Scenario S1.8: Load Pattern -- Validator set query at current epoch. Policy State -- Single validator active. Expected EFG -- EFG = 0. Expected Leak -- N/A. Required Action -- Confirm validator_set_snapshot is consistent with ledger:validators:active.

All Batch 1 scenarios target EFG = 0, confirming the baseline operational correctness of the KVP protocol under normal conditions. These scenarios form the mandatory baseline that must be sustained before any gate activation can be approved.

C.2 Scenario Matrix Batch 2 -- Boundary and Stress Conditions

Table C.2 presents the scenario evaluation matrix for boundary and stress conditions.

Scenario S2.1: Load Pattern -- Mint transaction at exactly MintCap_t. Policy State -- Policy active with mint cap. Expected EFG -- EFG = 0 (compliant). Expected Leak -- Leak = fee_destruction x fees. Required Action -- Verify receipt status = success, supply updated correctly.

Scenario S2.2: Load Pattern -- Mint transaction at MintCap_t + 1 unit. Policy State -- Policy active with mint cap. Expected EFG -- EFG = 1 (violation detected). Expected Leak -- Leak unchanged (mint rejected). Required Action -- Verify receipt status = policy_reject, supply unchanged.

Scenario S2.3: Load Pattern -- Burn transaction at full account balance. Policy State -- Policy active, burn authorized. Expected EFG -- EFG = 0. Expected Leak -- Leak = fee_destruction x fees. Required Action -- Verify account balance reaches zero, supply equation holds.

Scenario S2.4: Load Pattern -- Fee routing transaction with exact policy split. Policy State -- Policy active, fee split defined. Expected EFG -- EFG = 0. Expected Leak -- Leak = destruction_share x fee. Required Action -- Verify fee split matches Policy_t fee routing parameters.

Scenario S2.5: Load Pattern -- Rapid successive transactions, 50 tx/block. Policy State -- Policy active. Expected EFG -- EFG = 0 if all compliant. Expected Leak -- Leak = cumulative destruction across all 50 tx. Required Action -- Verify no supply inconsistency under high tx volume.

Scenario S2.6: Load Pattern -- Policy activation proposal with threshold - 1 approvals. Policy State -- Pending policy change. Expected EFG -- EFG = 0 (no policy change). Expected Leak -- N/A. Required Action -- Verify proposal rejected, ledger:policy:active unchanged.

Scenario S2.7: Load Pattern -- Policy activation proposal with exact threshold approvals. Policy State -- Pending policy change. Expected EFG -- EFG = 0 after activation. Expected Leak -- N/A. Required Action -- Verify proposal accepted, KPI_t updated, history entry created.

Scenario S2.8: Load Pattern -- Epoch boundary transition with validator set unchanged. Policy State -- Epoch transition. Expected EFG -- EFG = 0. Expected Leak -- N/A. Required Action -- Verify new epoch snapshot matches previous, blocks continue.

Batch 2 scenarios verify that the K-DEC policy boundary enforcement operates correctly at the exact boundary conditions. Scenario S2.2 in particular confirms that EFG detection is sensitive to single-unit policy violations, demonstrating the precision of the F_E(t) compliance measure.

C.3 Scenario Matrix Batch 3 -- Failure Injection and Recovery

Table C.3 presents the scenario evaluation matrix for failure injection and recovery conditions.

Scenario S3.1: Load Pattern -- Rust node restart during block production. Policy State -- Policy active, ledger intact. Expected EFG -- EFG = 0 after recovery. Expected Leak -- N/A. Required Action -- Verify node recovers to canonical tip, block production resumes.

Scenario S3.2: Load Pattern -- Go gateway restart while node is running. Policy State -- Policy active. Expected EFG -- EFG = 0 (node unaffected). Expected Leak -- N/A. Required Action -- Verify gateway reconnects, no stale data served post-restart.

Scenario S3.3: Load Pattern -- DB-3 indexer stop and rebuild. Policy State -- Policy active, canonical ledger intact. Expected EFG -- EFG = 0 (DB-1 unaffected). Expected Leak -- N/A. Required Action -- Verify rebuilt indexer matches DB-1 balance for all accounts.

Scenario S3.4: Load Pattern -- Invalid JSON payload submitted to gateway. Policy State -- Any. Expected EFG -- N/A. Expected Leak -- N/A. Required Action -- Verify gateway returns structured error, no crash or hang.

Scenario S3.5: Load Pattern -- Transaction with insufficient account balance. Policy State -- Policy active. Expected EFG -- EFG = 0 (tx rejected). Expected Leak -- Leak = 0 (tx failed). Required Action -- Verify receipt status = failed, balance unchanged.

Scenario S3.6: Load Pattern -- Policy activation with replay attack (used epoch_id). Policy State -- Policy active. Expected EFG -- EFG = 0 (replay rejected). Expected Leak -- N/A. Required Action -- Verify proposal rejected with REPLAY_DETECTED error code.

Scenario S3.7: Load Pattern -- Network partition simulated by stopping gateway for 60 seconds. Policy State -- Policy active. Expected EFG -- EFG = 0 (canonical ledger unaffected). Expected Leak -- N/A. Required Action -- Verify chain continues locally, gateway recovers after reconnection.

Scenario S3.8: Load Pattern -- Consistency check: recent index vs canonical ledger, 1000 blocks. Policy State -- Policy active,

sustained operation. Expected EFG -- EFG = 0. Expected Leak -- N/A. Required Action -- Verify 100% match between index hashes and canonical tx records.

Batch 3 scenarios directly correspond to the testnet hardening gate criteria in FOUNDATION_GATES.md. Passing all Batch 3 scenarios provides the documented evidence required for the Phase A hardening gate. Each scenario must produce a documented result with outcome, evidence, and guard as specified in the formal hardening gate acceptance criteria.

Appendix D. Technical Propositions and Proof Sketches

The following propositions formalize the key theoretical properties of the K-DEC framework. Each proposition is stated as a formal claim followed by a proof sketch that outlines the argument structure. Full formal proofs are left to future work as identified in Chapter 10.

D.1 Proposition 1 -- Composite Finality Bound

Proposition: For any block height t, $F_K(t) = F_L(t) * F_E(t)$ satisfies $0 <= F_K(t) <= 1$, and $F_K(t) = 1$ if and only if $F_L(t) = 1$ and $F_E(t) = 1$.

Proof Sketch: $F_L(t)$ and $F_E(t)$ are both defined on [0,1]. The product of two values in [0,1] is in [0,1]. The product equals 1 if and only if both factors equal 1, since if either factor is less than 1, the product is strictly less than 1. The product equals 0 if either factor equals 0. Therefore the composite function correctly captures the requirement that full K-DEC finality requires both ledger finality and economic policy compliance simultaneously.

D.2 Proposition 2 -- EFG Non-Negativity and Bound

Proposition: For any block height t, EFG(t) = |F_L(t) - F_E(t)| satisfies 0 <= EFG(t) <= 1, and EFG(t) = 0 if and only if F_L(t) = F_E(t).

Proof Sketch: The absolute value of the difference of two values in [0,1] is in [0,1] by the properties of absolute value and the triangle inequality. EFG(t) = 0 directly implies F_L(t) = F_E(t) by definition of absolute value. The maximum EFG = 1 is achieved when one factor is 0 and the other is 1, representing the maximum divergence between ledger finality and economic finality.

D.3 Proposition 3 -- Policy Hash Tamper Evidence

Proposition: Given a collision-resistant hash function H, for any two policy configurations (P1, Q1, E1) and (P2, Q2, E2), if H(P1 || Q1 || E1) = H(P2 || Q2 || E2) then (P1, Q1, E1) = (P2, Q2, E2) with overwhelming probability.

Proof Sketch: The collision resistance of H guarantees that it is computationally infeasible to find two distinct inputs that produce the same hash output. Therefore, KPI_t = H(Policy_t || Params_t || Epoch_t) uniquely identifies the policy configuration with overwhelming probability. Any modification to Policy_t, Params_t, or Epoch_t produces a different KPI_t, making unauthorized policy changes detectable through hash comparison against the on-chain record.

D.4 Proposition 4 -- Supply Equation Conservation

Proposition: For any block height t >= 0, S[t] = S[0] + sum(Mint[s] for s in [0,t-1]) - sum(Burn[s] for s in [0,t-1]) - sum(Leak[s] for s in [0,t-1]) if and only if all supply-modifying operations from genesis to height t are policy-authorized.

Proof Sketch: The supply equation defines a recurrence relation S[t+1] = S[t] + Mint[t] - Burn[t] - Leak[t]. Unrolling the recurrence from S[0] gives the closed-form expression. Policy authorization is required for each Mint[t] and Burn[t] term: unauthorized operations are rejected by the policy compliance check pipeline, producing receipts with status = failed and contributing 0 to the supply-modifying terms. Therefore, the equation holds for all authorized operations, and any deviation indicates either an unauthorized operation or a ledger implementation error.

D.5 Proposition 5 -- Governance Threshold Unforgeability

Proposition: Under the unforgeability assumption of the digital signature scheme used for governance approvals, a policy activation with fewer than threshold_governance valid approvals cannot be constructed by an adversary who does not control threshold_governance governance actor private keys.

Proof Sketch: Each approval in the approvals array requires a valid digital signature by a registered governance actor. Under the unforgeability assumption of the signature scheme, producing a valid signature without the corresponding private key is computationally infeasible. An adversary controlling fewer than threshold_governance actor keys can produce at most threshold_governance - 1 valid signatures, which is insufficient for policy activation. Therefore, unauthorized policy activation requires compromising at least threshold_governance governance actor keys.

D.6 Proposition 6 -- Validator Set Audit Completeness

Proposition: For any epoch transition from epoch e to epoch e+1 in KVP, the set of validator changes V(e+1) XOR V(e) is non-empty if and only if there exists at least one governance record in DB-4 documenting the corresponding authorization decision.

Proof Sketch: The validator onboarding flow requires that a governance approval record is created in DB-4 before the validator activation can be submitted to the Rust node. The Rust node's governance module verifies the approval hash before processing the activation. Therefore, a validator entering or leaving the active set without a DB-4 governance record is structurally prevented by the protocol design. The contrapositive also holds: a DB-4 governance record with no corresponding validator set change indicates an unexecuted governance decision.

D.7 Proposition 7 -- Domain Separation Non-Interference

Proposition: Under the KVP domain separation architecture, a write operation on DB-2 wallet application state cannot directly modify DB-1 chain state without flowing through the canonical transaction submission pipeline.

Proof Sketch: The domain separation is enforced at the service boundary level: the WalletKVP2026 service does not have a direct connection to the RocksDB instance owned by the Rust node. All interactions between the wallet application and chain state must flow through the Go gateway API, which in turn forwards transaction submissions to the Rust node's transaction endpoint. The Rust node applies policy compliance checks before modifying chain state. Therefore, chain state modifications originating from the wallet

application are subject to the same policy enforcement as all other transactions, preserving the F_E(t) measurement validity.

D.8 Proposition 8 -- EFG Reduction Under Gate Activation

Proposition: If the cumulative EFG metric CEFG(t1, t2) / (t2 - t1) < epsilon over a testnet period [t1, t2], then the protocol has demonstrated that the average rate of policy non-compliance is below the epsilon threshold, satisfying the quantitative condition for open mainnet readiness.

Proof Sketch: By the definition of CEFG(t1, t2) = sum(EFG(t) for t in [t1, t2]), the normalized metric represents the time-averaged EFG over the testnet period. An EFG value of 0 at each block indicates full policy compliance; values above 0 indicate policy violations. If the normalized metric is below epsilon, the average frequency and severity of policy violations over the testnet period meets the quantitative readiness threshold. This condition is necessary but not sufficient for mainnet readiness: the gate activation also requires passing the qualitative hardening gate criteria in FOUNDATION_GATES.md and the governance audit completeness check.

criteria.