	People's Democratic Republic of Algeria **Ministry of Higher Education and Scientific Research** **National Polytechnic School of Oran – MA**	

Practical Internship Report at:
General Directorate of ATM, Mobilis

Title: Study and Implementation of Embedded Communication Protocols

Prepared by: KRAMMALA Assala Haifaa and LARBAOUI Keltoum
Program: Electrical Engineering
Specialization: Electronics and Embedded Systems
Supervised by: Merdjani said salah eddine

Academic Year: 2025/2026

Acknowledgements

This internship has been a valuable journey of learning, practical experience, and personal growth. Throughout our time at Mobilis, we were fortunate to receive guidance, support, and encouragement from several remarkable individuals.

We would like to sincerely thank Mr. MERDJANI SAID SALAH EDDINE, our supervisor, for his constant support, advice, and encouragement throughout the internship. His guidance helped us define our objectives, stay organized, and approach challenges with confidence. He always made himself available to answer our questions, provide feedback, and ensure we were on the right track. His mentorship not only supported our project but also inspired us to deepen our understanding and strive for excellence in every task.

We are also especially grateful to Ms. MAIZI HASSIBA , who provided invaluable technical assistance and practical insights. He patiently explained the company's infrastructure, network, and cloud systems, and guided us through this internship journey

Finally, we wish to extend our heartfelt thanks to the entire Mobilis team. From the very first day, we were warmly welcomed and supported. Their openness, collaboration, and willingness to share knowledge created an environment in which we could learn, contribute, and feel like a true part of the team.

This internship has been an enriching experience thanks to all of them, and we are deeply grateful for the opportunity to learn, grow professionally, and gain practical experience in a real industrial context.

TABLE OF CONTENTS :

. Chapter 1: Présentation of Mobilis……03

1.1. Overview……..03
1.2. Structure and Organization ……..03
1.3. Team Organization Structure ……...04

. Chapter II:Mobile Networks structure……...……07

2.1. Mobile Network Technologies ……..…07

2.2. Transport Network Infrastructure……..…07

2.3. 2G (GMS) Structure……...08

2.4. 3G (UMTS) Network Structure…….…10

2.5. 4G (eNodeB) Structure……..…11

2.6 5G and Cloud Network……...…14

. Chapter III: COMMUNICATION PROTOCOLS……..…16

3.1. Defining communication protocols in embedded systems……16

3.2. Common communication protocols in embedded systems……16

3.3 Communication Protocols Are Used within Mobilis……..…19

. Chapter IV: PRACTICAL REALISATION…….....22

4.1. Context and Problem Statement…….22

4.2. Objectives of the Project……...22

4.3. Proposed Solution……..23

4.4. Components and Tools Used in the Project……...24

4.5. System Architecture and Operation……...25

4.6. Practical Use of Communication Protocols……...27

4.7. Implementation of MQTT Communication (DHT11 & LED Control)…….31

4.8. Choice Between HTTP and MQTT……...32

4.9. Difficulties Encountered and Solutions……33

4.10. Vision and Expectations……...33

4.11. Future Improvements……...34

Introduction :

As part of our engineering training at the National Polytechnic School of Oran, students are required to complete an internship in order to complement their theoretical knowledge with practical experience in a professional environment. This internship represents an essential step in the academic curriculum, as it allows students to become familiar with real industrial systems, professional practices, and modern technologies used in companies.

In this context, I carried out my internship at **Algérie Télécom Mobile (Mobilis)**, one of the leading telecommunications operators in Algeria. Mobilis plays a key role in the deployment, operation, and maintenance of mobile communication networks across the country, relying on advanced technologies and embedded systems to ensure reliable and efficient services.

The main objective of this internship was to **study embedded systems used within the company and to analyze the communication protocols employed for data exchange and system coordination**. During this period, I focused on understanding the architecture of embedded devices, their role in telecommunications infrastructure, and the principles of communication between different hardware and software components.

This internship provided me with the opportunity to observe real embedded systems operating in a professional telecommunications environment and to link theoretical concepts—such as communication protocols, data transmission, and system integration—to practical applications. In addition to technical knowledge, this experience enhanced my understanding of teamwork, technical documentation, and professional responsibility.

Internship Objectives:

- To understand the operating principles of UART, SPI, and I2C communication protocols.
- To study network and application-layer communication protocols such as TCP/IP, MQTT, and HTTP.
- To implement these protocols on embedded platforms.
- To deploy and evaluate communication over mobile networks.
- To compare the performance, latency, and energy consumption of each protocol.
- To conduct a theoretical study of embedded communication protocols (UART, SPI, I2C).
- To carry out the practical implementation of these protocols on a microcontroller.
- To analyze network and application protocols (TCP/IP, MQTT, HTTP).
-

Chapter I: Présentation of Mobilis

I.1.Overview:

ATM Mobilis, a subsidiary of the telecommunications operator **Algérie Télécom**, is the **leading mobile telecommunications operator in Algeria**. Having become an autonomous company in August 2003, Mobilis offers its customers a wide range of innovative, high-quality products and services, including prepaid and postpaid offers adapted to all budgets, SMS services to all national and international operators, international roaming, voicemail services, and other value-added solutions.

As an innovative company, Mobilis relies on the convergence between the Internet and mobile telephony in the management of its communication systems, thereby positioning itself as a true **"mobile Internet" enterprise**.

In order to provide high-quality services to its customers, Mobilis has undertaken a large-scale project to deploy its **GSM network across the national territory**. Today, more than **96.7% of the Algerian population** is covered by a high-quality mobile network. ATM Mobilis currently serves **more than seven million active subscribers**.

I.2 Structure and Organization :

ATM Mobilis is structured according to international management standards in order to ensure efficient decision-making, operational performance, and high-quality service delivery. The company is headed by a **Chief Executive Officer (CEO)**, who is responsible for defining the overall strategy and supervising all activities.

The executive management is supported by **Division Managers, Central Directors, Regional Directors, and Advisors**, each responsible for specific functional or geographical areas. Strategic orientations and major decisions are validated by the **Board of Directors**, whose members come from diverse professional backgrounds.

Organizationally, Mobilis is divided into several key departments, including **Network and Technical Operations, Information Systems, Commercial and Marketing, Human Resources, Finance, and Customer Services**. Each department plays a crucial role in ensuring the reliability, performance, and continuous development of mobile telecommunications services.

Coordination between these departments is essential, particularly in technical operations where network infrastructure, embedded systems, and communication technologies must operate reliably and securely. Mobilis relies on modern information systems and internal communication tools to facilitate collaboration, optimize workflows, and support real-time decision-making.

This division consists of front-office and back-office teams, each playing critical roles in services such as:

• Transmission

• Network Supervision

• Radio Networks

• Core Network

• Value-Added Services (VAS)

• IP Networks

• Telecom Infrastructure

This experience provided deep insight into the technical and operational aspects of Mobilis' network management.

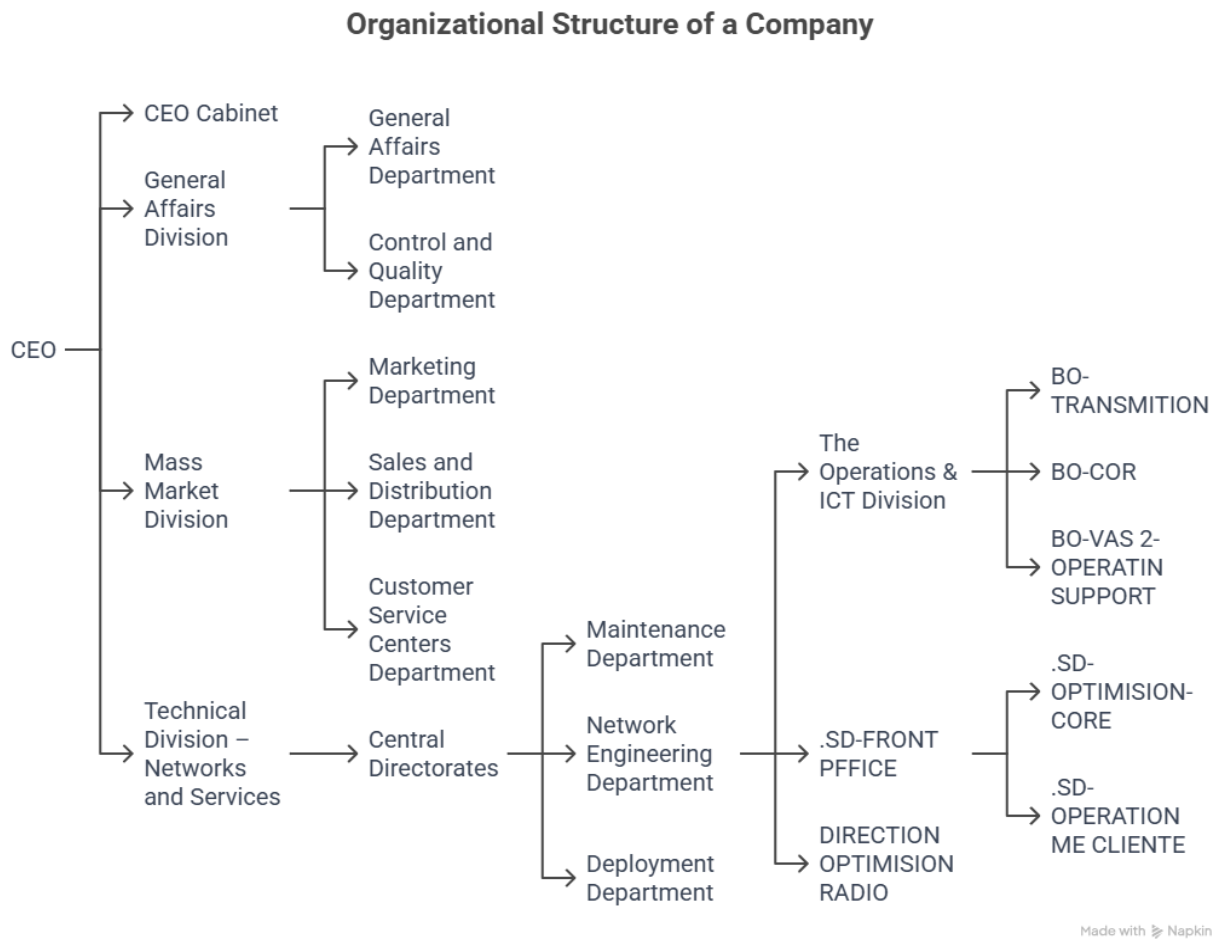

Figure 1: Organizational Chart of Mobilis

<u>Team Organization Structure :</u>

The Operations and Maintenance Directorate is structured into several divisions, each playing a specific role in network operations and maintenance. These divisions consist of two main types of teams:

1. **Front Office Teams:**

-Service Layer Team:

• Uses the OWS (Operational Workstation System) for alarm and incident management.

• When alarms are triggered in systems such as VAS (Value-Added Services), PS (Packet Switching), or OSS (Operational Support Systems), the Service Layer automatically generates tickets in OWS.

• These tickets are then assigned to the relevant departments (e.g., NSSD – Network Support and Service Delivery) for troubleshooting and resolution.

-Netico Team :

• Specializes in monitoring power infrastructure (energy equipment).

• Uses advanced surveillance tools to quickly detect power-related alarms (failures, anomalies, etc.).

• Upon detecting an alarm, Netico escalates the issue to the appropriate team for immediate action, ensuring operational continuity and minimizing service disruptions.

-Transmission & Radio Supervision Team :

• Responsible for monitoring and maintaining transmission links and radio equipment to ensure reliable network coverage.

• Uses signal quality management systems and radio parameter optimization tools.

2. Back Office Teams :

-Transmission Services Team:

This division manages the infrastructure supporting call transmission, ensuring stability and quality for voice communications through fiber optic and microwave links.

-Call Initiation Process :

1. **User Action**: A subscriber dials a number on their User Equipment (UE).

2. **Network Routing:**

• 2G (GSM): Signal travels via BTS (Base Transceiver Station) → BSC (Base Station Controller).

• 3G (UMTS): Handled by NodeB, which communicates with RNC (Radio Network Controller) via IuB interface.

• 4G (LTE): Managed by eNodeB (evolved NodeB), connecting directly to EPC (Evolved Packet Core) via S1 interface.

Voice Data Transmission :

-**Voice Data Transmission :**

<u>-2G/3G (Circuit Switched - CS):</u>

• Voice is digitized via a codec and routed through dedicated channels (CS).

• Path: BTS/NodeB → BSC/RNC → MSC/MGW for call setup.

<u>- 4G (Packet Switched - PS - VoLTE):</u>

• Voice is transmitted as IP packets over the PS network.

• Path: eNodeB → EPC (SGW/PGW/MME).

-Key Interfaces :

• Abis: BTS ↔ BSC (2G signaling/data).

• IuB: NodeB ↔ RNC (3G radio resource management).

• S1: eNodeB ↔ EPC (4G direct core connection).

-Call Termination :

• 2G/3G: MSC releases CS resources.

• 4G: EPC releases PS resources.

3. SD - Operation Maintenance ME Client VIP :

1. Office Structure & Team:

• Primary Function: o Infrastructure maintenance for corporate clients (ME).

• Team Size & Roles: o Network Engineers (handling core/transmission). o VIP Support Specialists (managing escalations).

2. Core Responsibilities :

- Infrastructure Management:

• Monitoring enterprise-grade networks (MPLS, cloud links, SD-WAN).

• Deploying security/compliance measures (firewalls, VPNs, audits).

- VIP Client Support:

• 24/7 incident response for critical outages.

• Custom SLAs (e.g., 1-hour resolution guarantees).

Conclusion du Chapitre :

Ce premier chapitre a permis de présenter l'entreprise Mobilis, son rôle stratégique dans le secteur des télécommunications en Algérie ainsi que son organisation interne. L'étude de la structure hiérarchique et des différentes directions a mis en évidence la complexité et la rigueur nécessaires à la gestion d'un réseau mobile à grande échelle.

La description des équipes techniques, notamment les équipes front-office et back-office, a permis de comprendre les mécanismes de supervision, de maintenance et de gestion des incidents réseau. Ce chapitre constitue ainsi une base essentielle pour situer le contexte professionnel du stage et comprendre l'environnement technique dans lequel les travaux ont été réalisés.

Chapter II: Mobile Networks structure

1. Mobile Network Technologies :

Mobile networks have evolved across different generations, each offering improved services:

• 2G (GSM): Supports voice calls and SMS. It uses the GSM standard and operates typically on 900 MHz and 1800 MHz frequencies.

• 3G (UMTS): Provides data services in addition to voice. It uses NodeB base stations and operates around 2100 MHz.

• 4G (LTE): Delivers high-speed internet data services. It uses eNodeB base stations and typically operates around 2300 MHz.

2. Transport Network Infrastructure :

Base stations are connected to higher network levels through a transport network, which ensures the flow of data between different network elements. This network typically includes:

1. **Feeder links:**
   These are the connections that link each base station to a central site or hub, where data from multiple stations is aggregated before being sent further into the network.
2. **Centralized connection to a Data Center (DC) or core network point:**
   From the hub, data is routed to a Data Center or the core of the network, where it is processed, stored, and directed to its final destination.
3. **Fiber optic connections:**
   Fiber optics are commonly used for transport networks because of their high bandwidth and reliability.

Fiber Optic Transmission Method:

To maximize the amount of data transmitted on a single fiber, a technique called DWDM (Dense Wavelength Division Multiplexing) is used:

- DWDM allows multiple optical signals to travel simultaneously over a single fiber, each using a different wavelength (or “color”) of light.
- Each wavelength carries its own independent data stream, effectively multiplying the fiber’s capacity without needing extra fibers.

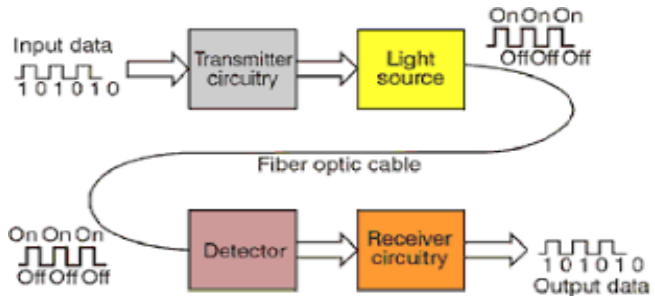

Figure 2: Fiber Optic

3. 2G (GMS) Structure :

The 2G network is organized in hierarchical layers, each with specific roles to manage communication between mobile users and the wider network.

1) BTS (Base Transceiver Station) :

- Examples: BTS1, BTS2.
- These are the cell towers that communicate directly with mobile phones using radio signals.
- Responsible for transmitting and receiving radio signals to and from users.
- Each BTS is connected to a BSC (Base Station Controller).

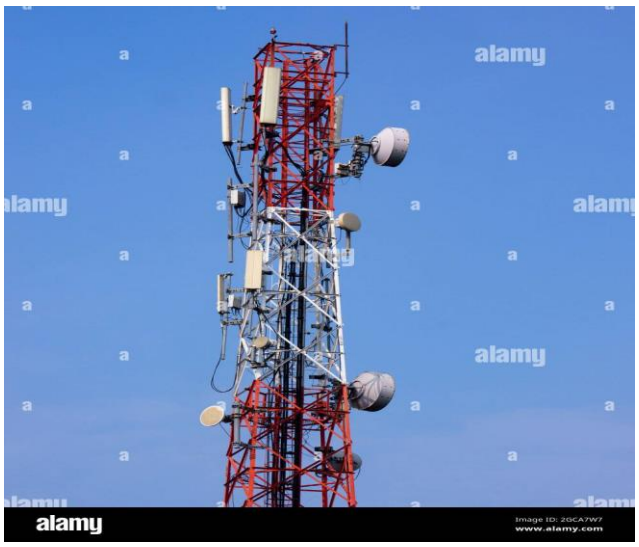

Figure 3: BTS

2) BSC (Base Station Controller) :

- Controls multiple BTSs.
- Manages radio resources, such as frequency allocation and handover (switching a call or data session from one BTS to another).
- Acts as a link between the BTSs and the MSC (Mobile Switching Center, labeled B.C in your diagram).

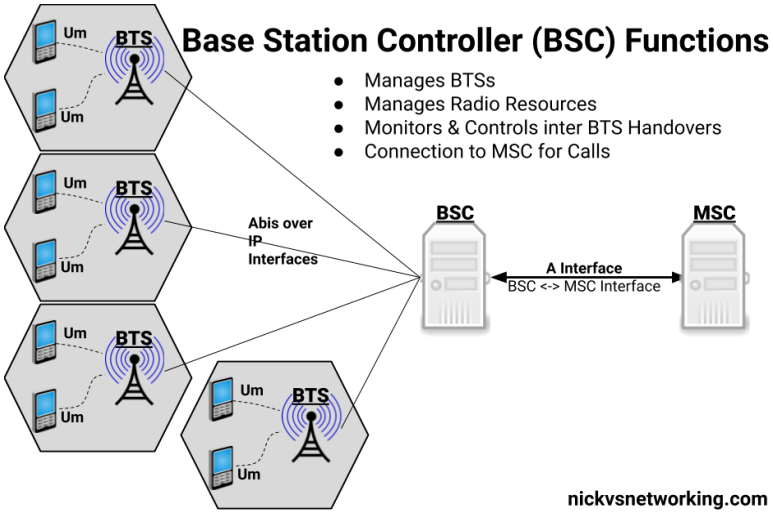

Figure 4: BSC

3) MSC (Mobile Switching Center, labeled B.C):

- Controls multiple BSCs.
- Responsible for call setup, routing, mobility management, and handovers.
- Splits network traffic into:
  - Voice/traffic data, which goes to the MGW (Media Gateway).
  - Signaling data, which goes to SGSN/GGSN for packet-switched services like mobile internet.

4) MGW (Media Gateway) :

- Routes voice traffic from the 2G network to the PSTN (Public Switched Telephone Network) or other networks.
- Handles voice calls and some media processing.

5) **SGSN (Serving GPRS Support Node):**

- Manages mobile data sessions for 2G and 3G networks.
- Responsible for packet switching, mobility management, authentication, and session management.

6) **GGSN (Gateway GPRS Support Node):**

- Acts as a gateway between the mobile network and external data networks, such as the Internet.
- Assigns IP addresses to mobile devices and routes packet data.

7) GW (Gateway) :

- Connects the entire GSM structure to external networks, ensuring communication beyond the mobile operator's network.

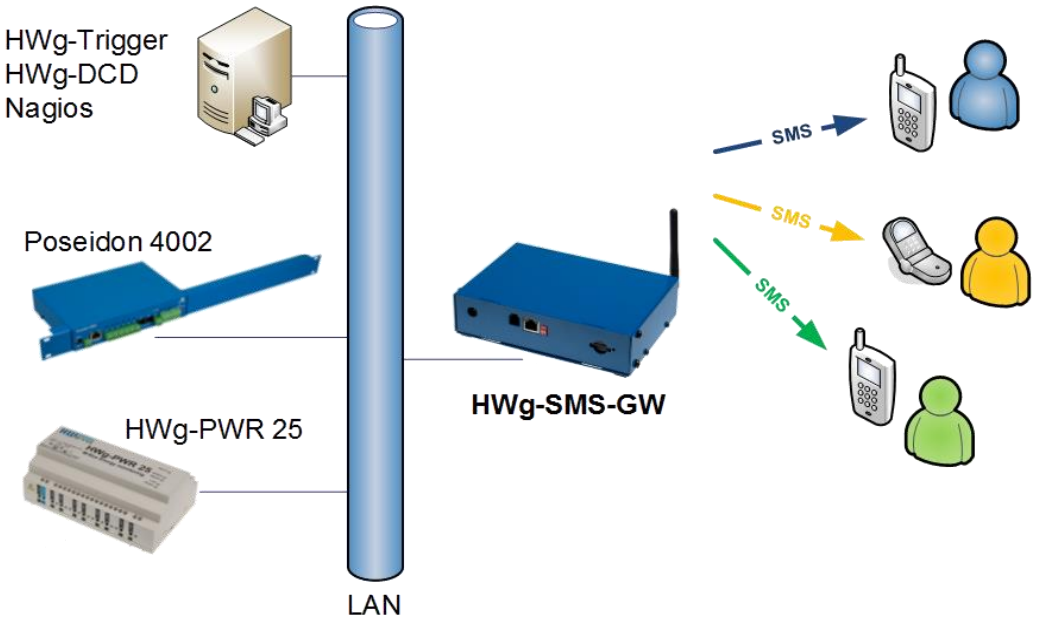

Figure 5: 2G (GMS) Structure

4. 3G (UMTS) Network Structure:

The 3G network (UMTS) builds on the 2G structure but adds better support for high-speed data and multimedia services. Its architecture is organized in layers with defined responsibilities:

1) **NodeB :**

- Equivalent to the BTS in 2G.
- Directly communicates with mobile users via radio signals.
- Handles radio transmission and reception, including tasks like:
    - Modulation (converting digital data to radio signals)
    - Coding (error correction and data formatting)
    - Power control (adjusting signal strength for quality and efficiency)
- Connected to the RNC (Radio Network Controller).

2) **RNC (Radio Network Controller) :**

- Equivalent to the BSC in 2G.
- Controls multiple NodeBs.
- Manages radio resources, mobility, handover between cells, and encryption/security.
- Acts as a bridge to the MSC (for voice) and SGSN (for data).

3) **MSC (Mobile Switching Center) :**

- Handles circuit-switched services like voice calls and SMS.
- Responsible for call setup, routing, and handover.
- Works together with the MGW (Media Gateway) to route voice traffic to external networks (like PSTN).

4) **MGW (Media Gateway) :**

- Routes voice and data traffic between the 3G network and external networks.
- Works with the MSC to manage voice call routing.

5) **USN (User Services Node, similar to SGSN/GGSN in 2G) :**

- Handles packet-switched data, such as internet browsing, apps, and multimedia.
- Manages mobility, session, and user authentication.
- Receives data from the RNC and forwards it to the GGSN.
- Provides access to external packet data networks, like the Internet.
- Assigns IP addresses to mobile devices.
- Routes data packets to and from external networks.

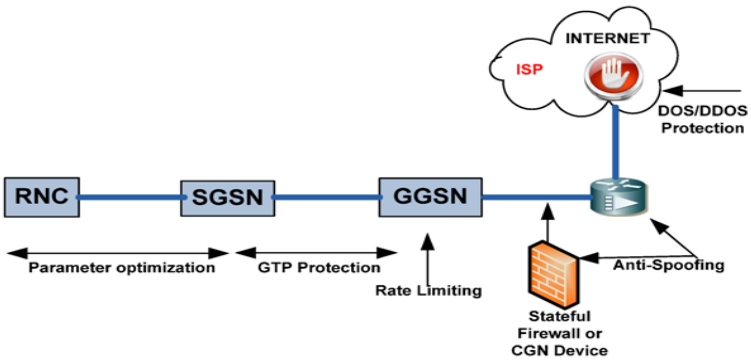

Figure 6: 3G (UMTS) Network Structure

5. 4G (eNodeB) Structure:

The LTE network consists of two main parts: the radio access network (E-UTRAN) and the core network (EPC – Evolved Packet Core)**.** It also relies on key interfaces to connect user devices to external networks.

1) **eNodeB (Evolved Node B) :**

- **Role:** The base station in LTE networks; it communicates wirelessly with LTE user devices (UEs).
- **Functions:**
  - Manages radio resources (e.g., scheduling, power control).
  - Connects to UEs over the Uu interface (air interface).
  - Connects to other eNodeBs via the X2 interface for handovers and coordination.
  - Connects to the EPC via the S1 interface, split into:
    - S1-MME: control plane (signaling, management)
    - S1-U: user plane (actual data traffic)

2) **LTE UE (User Equipment) :**

- **Role:** The end-user device (smartphone, tablet, IoT device).
- **Function:** Connects to the LTE network through the Uu interface**.**

3) **E-UTRAN (Evolved Universal Terrestrial Radio Access Network):**

- **Role:** The LTE radio access network composed of eNodeBs.
- **Function:** Provides the air interface to UEs and connects them to the EPC.

4) **MME (Mobility Management Entity) :**

- **Role:** Control plane entity.
- **Functions:**
    - Handles UE authentication**,** session establishment**,** and mobility management (e.g., tracking area updates).
    - Connects to eNodeB via S1-MME.
    - Connects to HSS via S6a for subscriber data.
    - Connects to S-GW via S11 for session management.

5) **S-GW (Serving Gateway) :**

- **Role:** User plane entity.
- **Functions:**
    - Routes and forwards user data packets.
    - Acts as a mobility anchor during handovers.
    - Connects to eNodeB via S1-U and to **P-GW** via **S5/S8**.

6) **P-GW (Packet Data Network Gateway)**

- **Role:** Gateway to external IP networks.
- **Functions:**
    - Assigns IP addresses to UEs.
    - Enforces QoS policies via the PCRF (through the Gx interface).
    - Connects to S-GW via S5/S8 and to external networks via SGi.

7) **HSS (Home Subscriber Server) :**

- **Role:** Central subscriber database.
- **Functions:**
    - Stores user profiles, authentication, and authorization data.
    - Connects to the MME via S6a

8) **PCRF (Policy and Charging Rules Function):**

- **Role:** Manages QoS and charging policies.
- **Functions:**
    - Dynamically controls network resources based on operator policies.
    - Connects to P-GW via Gx

9) **Key Interfaces :**

Interface	Connection	Purpose
Uu	UE ↔ eNodeB	Air interface for radio communication
X2	eNodeB ↔ eNodeB	Handover coordination and load balancing
S1-MME	eNodeB ↔ MME	Control plane (signaling, session setup)
S1-U	eNodeB ↔ S-GW	User plane (data traffic)
S6a	MME ↔ HSS	Subscriber data and authentication
S11	MME ↔ S-GW	Session management
S5/S8	S-GW ↔ P-GW	Data forwarding (S5: same network, S8: roaming)
Gx	P-GW ↔ PCRF	Policy and QoS control
SGi	P-GW ↔ External network	Access to Internet, IMS, apps

10) **External Networks :**

- **IMS (IP Multimedia Subsystem):** Supports VoIP, video calls, and other multimedia services.
- **Internet:** General internet access.
- **External Applications / App Servers:** Hosted services accessed by UEs.

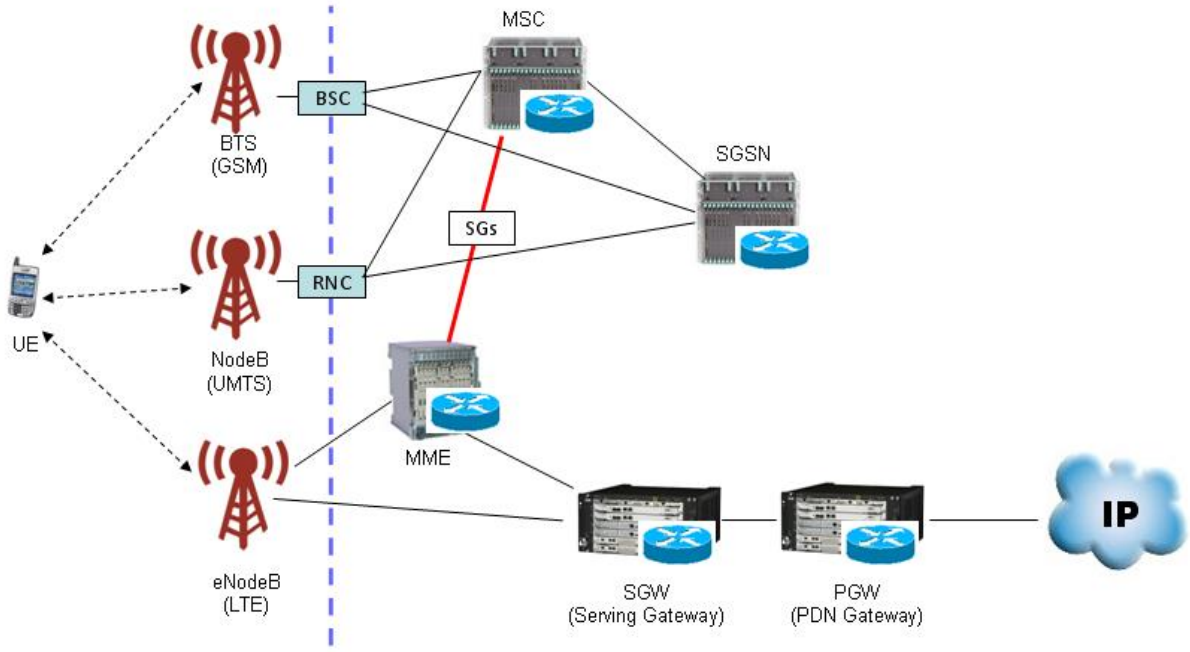

Figure 7: 4G (eNodeB) Structure

5. 5G and Cloud Network Concepts :

1) **Cloud Computing in 5G :**

Cloud computing is the foundation for virtualization in 5G. It allows network functions to run on standard servers instead of dedicated hardware. There are three main types:

1. **Public Cloud**
   - Hosted by external providers (AWS, Azure, Google Cloud).
   - Resources are shared among multiple users.
   - Pros: scalability, cost-efficiency.
   - Cons: less control over sensitive data.
2. **Private Cloud**
   - Dedicated infrastructure for a single organization or operator.
   - Pros: full control, enhanced security.
   - Often used by telecom operators for critical network functions.
3. **Hybrid Cloud**
   - Combines public and private clouds.
   - Sensitive data can stay on the private cloud; other services can use public cloud resources.
   - Flexible and cost-efficient.

2) **Telco Cloud :**

- A telecom-focused cloud that runs mobile network functions.
- Supports vRAN, core network functions, and edge computing.
- Key for 5G slicing, dynamic resource allocation, and low-latency services.

3) **Site Virtualization (vRAN / Virtualized RAN):**

- In traditional 2G/3G/4G networks, radio equipment (BTS, NodeB, eNB) is physical and located at each site**.**
- In 5G, these functions can be virtualized using software:
  - vRAN (Virtualized Radio Access Network**)** separates the physical hardware from the network logic.
  - Multiple network functions can run on standard servers in data centers, instead of requiring dedicated equipment at each site.
- **Benefits:**
  - Lower equipment and maintenance costs.
  - Faster deployment of new features or updates.
  - Ability to manage multiple sites remotely from a centralized control point

4) **Cloud and Data Centers :**

- Virtualized sites connect to data centers that host critical network functions:
  - CU (Central Unit): handles centralized signal processing and network control.
  - DU (Distributed Unit): located closer to antennas for low-latency processing.
  - Both units can be virtualized in the cloud.
- The cloud allows for centralized network management**,** dynamic resource allocation**,** and scalable capacity according to traffic demands.

5)**Key Network Functions:**

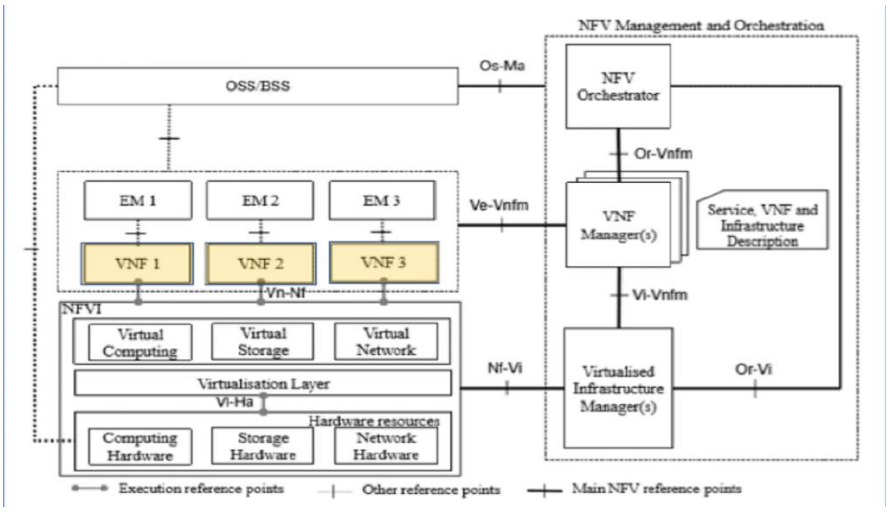

Figure 8: Virtualized Network

6) **How It Works in 5G :**

1. Radio Access (NodeB / gNodeB**)** sends data to vRAN, which may be virtualized in the cloud.
2. Central or Edge Data Centers host network functions like:
   - Core Network Functions**:** MME, PCRF, EPG
   - Virtualized Routers and Switches for traffic management
3. NFV and Orchestration**:**
   - NFVO, VNFM, and VIM manage deployment, scaling, and resource allocation of network functions.
4. Cloud-native functions ensure high scalability and automation.
5. Edge computing allows low-latency applications (AR/VR, autonomous cars, gaming).

7) **Key Advantages of This 5G Approach:**

- **Flexibility and agility:** the network can evolve quickly without touching physical sites.
- **Cost efficiency:** less specialized hardware at each site, more use of standard servers in data centers.
- **Centralized control:** easier and more efficient network management from a single location.
- **Improved performance:** virtualization allows better management of latency, capacity, and quality of service.

Conclusion du Chapitre :

Ce chapitre a permis d'analyser l'évolution et l'architecture des réseaux mobiles, depuis la 2G jusqu'à la 5G, en mettant en évidence les rôles des différents équipements et interfaces. L'étude des technologies GSM, UMTS, LTE et des concepts de virtualisation et de cloud a montré comment les réseaux mobiles sont devenus de plus en plus performants, flexibles et orientés vers les services de données.

La présentation de l'infrastructure de transport et de la transmission par fibre optique a également souligné l'importance des réseaux à très haut débit pour assurer la continuité et la qualité de service. Ce chapitre a ainsi permis de relier les concepts théoriques étudiés en cours à leur application réelle au sein de Mobilis.

Chapter III : COMMUNICATION PROTOCOLS

1- Defining communication protocols in embedded systems:

Communication protocols serve that purpose by imposing consistent data flows. This design prevents compatibility failures, wiring conflicts, or timing mismatches. Long-term gains include frameworks that can be applied to multiple projects, allowing more predictable schedules and reduced engineering effort.

Some systems transfer data serially, while others rely on parallel lines with several data paths running simultaneously. Decisions about which protocol to choose can shape total system costs, maximum data rates, and overall reliability. Factors such as ease of implementation, error detection, and flexibility for expansions come into play. As embedded systems grow more complex, protocols form the bedrock for stable performance, straightforward upgrades, and minimal rework.

2- Common communication protocols in embedded systems:

2.1. UART :

A direct, asynchronous link often proves efficient when connecting straightforward subsystems. UART (Universal Asynchronous Receiver/Transmitter) uses distinct transmit (TX) and receive (RX) lines without a shared clock. Developers often use UART for debugging because it is easy to monitor with basic hardware or software tools. Most microcontrollers have built-in UART interfaces, making this option attractive for simple device-to-device communication.

Reduced wiring requirements lower production expenses—an advantage in large-scale manufacturing. The asynchronous nature also simplifies board layout, as fewer timing components are necessary. This approach suits tasks that do not need extreme data rates, such as sensor reading or basic user interfaces. Overall complexity stays low, saving valuable engineering hours and budget.

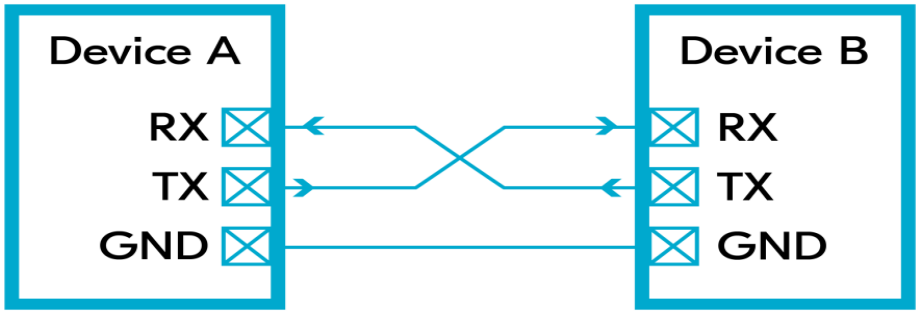

Figure 9: UART protocol

2.2. SPI:

High-speed sensor interfaces or external memory access often require a more powerful serial option. SPI (Serial Peripheral Interface) meets this need with a dedicated clock line plus separate lines for master-to-slave (MOSI) and slave-to-master (MISO) communication. A chip-select (CS) or slave-select (SS) line allows a single master to communicate with several slaves. This structure supports tasks needing fast transfers, such as retrieving large datasets from flash memory or driving high-resolution displays.

SPI can operate at higher clock speeds than asynchronous methods, which boosts throughput. The additional lines consume board space but deliver more predictable timing and reliability. Well-implemented SPI delivers improvements in data rates, essential for advanced control loops in applications like power electronics or flight control systems. Teams often see tangible gains in efficiency that free up resources for other design priorities.

“Performance gains often appear because SPI can function at higher clock frequencies than asynchronous alternatives.”

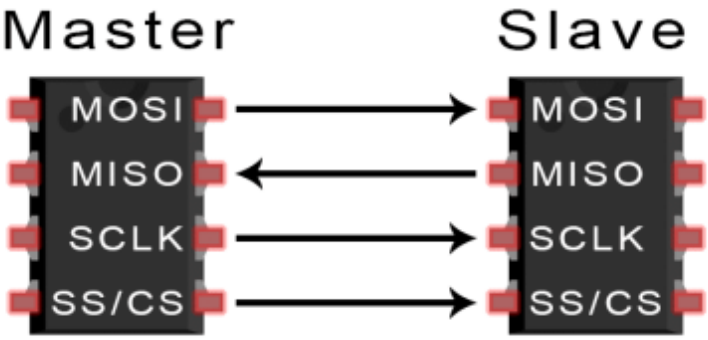

Figure 10: SPI PROTOCOL

2.3. I2C:

Resource-conscious designs sometimes benefit from minimal pin usage. I2C (Inter-Integrated Circuit) addresses that challenge by using just two signals (SDA for data, SCL for clock) to link multiple devices on one bus. Each node has an address, allowing one master to coordinate communication with various slave devices. Many common sensors or peripheral chips include built-in I2C support, which helps accelerate development.

Clock stretching is a key feature, letting slower devices pause the clock line until ready. This design prevents data corruption and maintains a stable transfer. I2C supports modes such as Standard, Fast, and Fast Plus for different bandwidth demands. Developers often favor I2C for sensor arrays or peripheral management because fewer wires reduce assembly time, total costs, and overall board complexity.

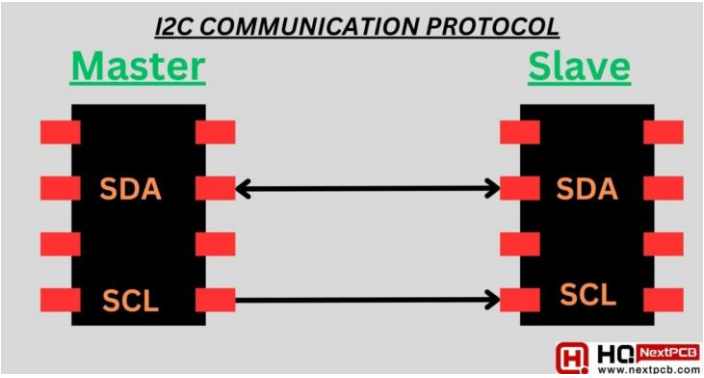

Figure 11: I2C PROTOCOL

2.4. MQTT:

MQTT stands for **M**essage **Q**ueuing **T**elemetry **T**ransport. MQTT is a simple messaging protocol, designed for constrained devices with low bandwidth. So, it's the perfect solution to exchange data between multiple IoT devices.

MQTT communication works as a publish and *subscribe* system. Devices publish messages on a specific topic. All devices that are subscribed to that topic receive the message.

The first concept is the publish *and subscribe* system. In a publish and subscribe system, a device can publish a message on a topic, or it can be subscribed to a particular topic to receive messages.

Another important concept is the *topics*. Topics are the way you register interest for incoming messages or how you specify where you want to publish the message.
Topics are represented with strings separated by a forward slash. Each forward slash indicates a topic level. Here's an example of how you would create a topic for a lamp in your home office:

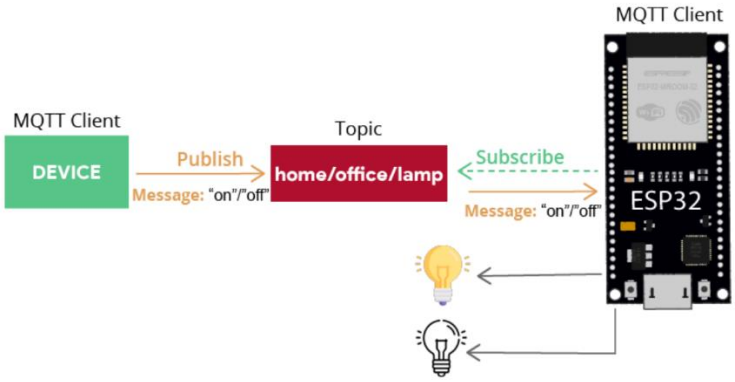

Figure 12: MQTT PROTOCOL

Finally, another important concept is the broker.
The MQTT broker is responsible for receiving all messages, filtering the messages, deciding who is interested in them, and then publishing the message to all subscribed clients.

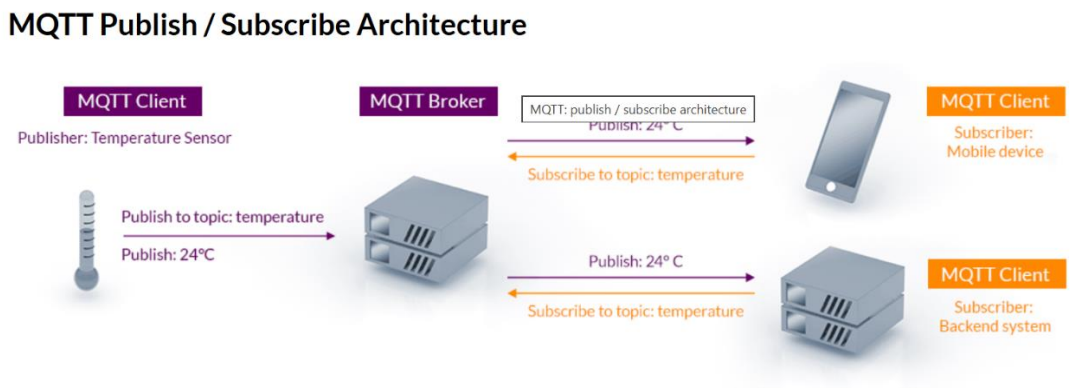

Figure 13: MQTT ARCHITECTURE

2.5. HTTP:

HTTP is considered a connectionless and stateless protocol. Being connectionless refers to the fact that a connection's lifecycle starts with the request and ends with the response, and no connection is preserved after the response from the server. This is advantageous as it prevents the hold-up of resources in idle times.

HTTP is considered a stateless protocol as each data exchange is independent from previous exchanges between the client and the server, which means the server does not keep a history of a client's previous requests. This is in contrast with the File Transfer Protocol (FTP) for example, where the two entities may keep track of exchanged authentication credentials or the current working directory, for continuity and ease-of-access purposes. This can be an advantage for server implementations as it reduces complexity and eliminates the need for complex overhead data**.**

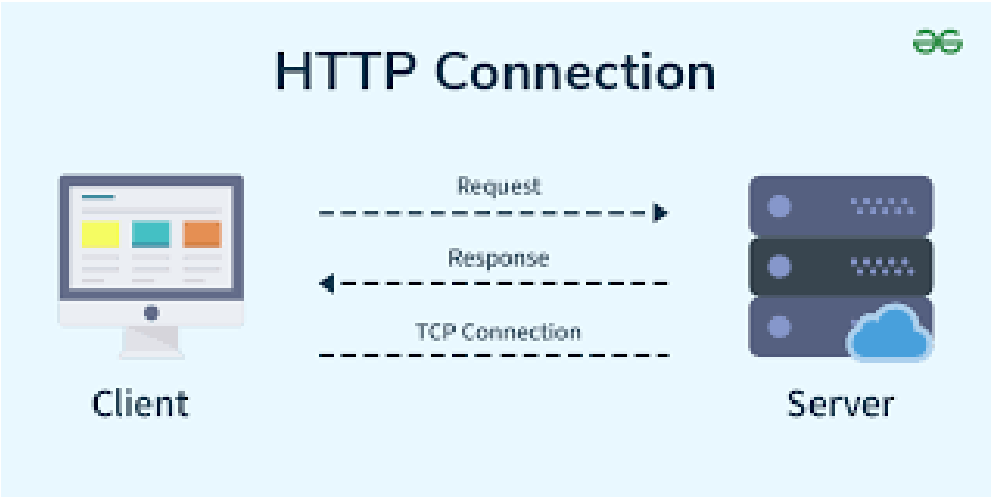

Figure 14: HTTP PROTOCOL

3. Communication Protocols Are Used within Mobilis:

In Mobilis, communication protocols are used across all layers of the telecommunications infrastructure to ensure reliable data transmission, network management, and service delivery. They operate in the Radio Access Network, transport network, and core network to support signaling, data routing, subscriber management, and internet access. These protocols are also essential for interconnecting base stations, aggregation sites, and data centers with high reliability and low latency. In addition, Mobilis relies on standard communication protocols within its IT systems, digital platforms, embedded systems, and IoT devices to enable monitoring, control, billing, customer management, and real-time data exchange across mobile and IP-based networks

Conclusion du Chapitre :

Dans ce chapitre, les protocoles de communication utilisés dans les systèmes embarqués ont été étudiés en détail. Les protocoles UART, SPI et I^2C ont été présentés comme des solutions essentielles pour assurer la communication entre les différents composants matériels d'un système embarqué.

L'analyse des protocoles réseau et applicatifs tels que HTTP et MQTT a mis en évidence leur rôle clé dans les systèmes connectés et l'Internet des objets. Ce chapitre a montré que le choix du protocole dépend fortement des contraintes du système, notamment la vitesse, la consommation énergétique, la fiabilité et la complexité. Il a également permis de comprendre l'importance de ces protocoles dans les infrastructures télécoms modernes utilisées par Mobilis.

Chapter IV: Practical Realization

1. Context and Problem Statement

The internship was carried out at **Mobilis**, a national telecommunications operator managing large-scale network infrastructures distributed across the country. These infrastructures include core network rooms, transmission rooms, data centers, base station control rooms, switching rooms, and power supply rooms, all hosting highly sensitive equipment such as servers, routers, switches, optical transmission systems, and power supply systems.

These environments are considered **critical technical areas**, where any unauthorized access, environmental degradation, or delayed intervention may lead to service interruption, data loss, or major network failures affecting a large number of users. Therefore, telecommunications operators require advanced physical security systems, strict access control policies, and continuous supervision of operating conditions.

The main technical challenges addressed during this internship concern the **management and supervision of restricted technical rooms**. Key requirements include:

- Ensuring controlled access for authorized personnel only
- Recording and tracing all entries and exits
- Providing continuous monitoring of environmental parameters
- Generating alerts when operating conditions fall outside safe ranges, potentially endangering equipment or disrupting services

This context motivated the design of an embedded system capable of addressing these technical needs.

2. Objectives of the Project

The main objective of this 15-day internship project was to design and prototype a **real-time monitoring and secure access system** based on embedded systems and communication protocols. The specific objectives were:

- Implement a double-authentication access control system for critical rooms
- Ensure continuous monitoring of environmental parameters inside the room
- Provide a web-based monitoring interface displaying access history, sensor data, and alerts
- Allow remote control of actuators installed in the room
- Practice and integrate multiple communication protocols commonly used in embedded systems

3. Proposed Solution

To address the identified problem, a complete embedded solution was proposed and prototyped. The system is based on an **ESP32 microcontroller**, which acts as the central unit.

The proposed system ensures:

- Secure access using double authentication (fingerprint + RFID)
- Real-time display of access events (log-in and log-out)
- Continuous acquisition of temperature and humidity data
- Alert generation when sensor values exceed predefined safety thresholds
- Remote control of room equipment through a web interface

All access attempts and sensor data are visualized in real time on a monitoring screen, allowing supervisors to quickly assess the state of the room.

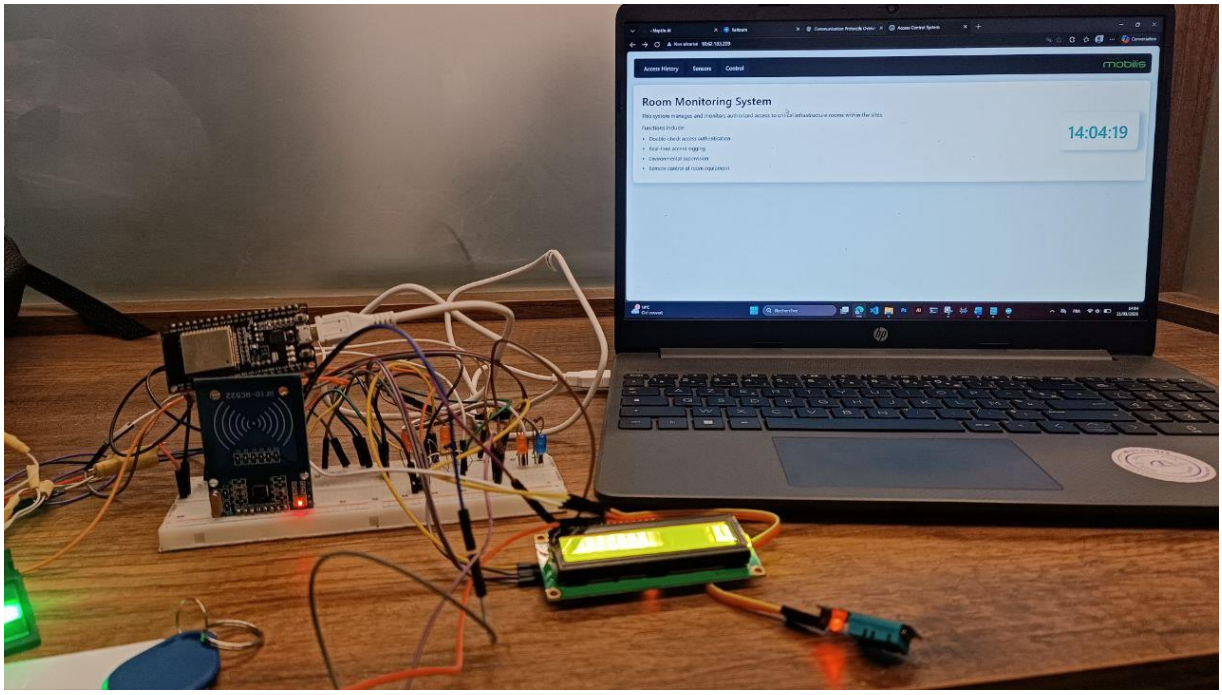

4. Components and Tools Used in the Project

4.1 Hardware Components

- ESP32-WROOM-32 microcontroller
- RFID RC522 module

- Fingerprint sensor
- LCD display (I^2C, address 0x3F, 16x2)
- DHT11 sensor
- Two LEDs for actuator simulation
- Two LEDs for access decision visualization
- Push button to simulate the door mechanism
- External power supply

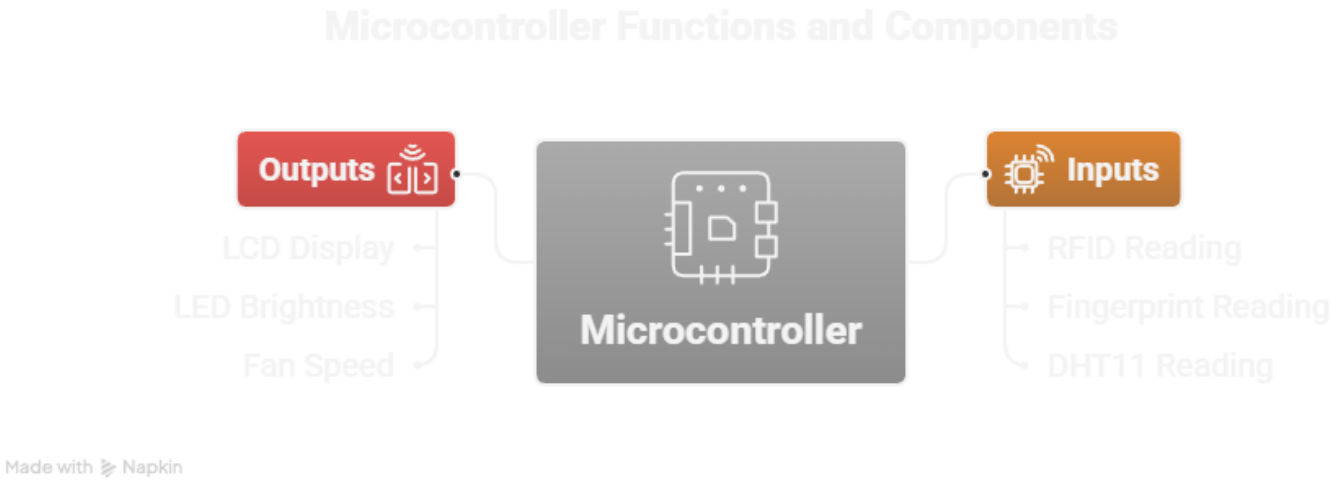

4.2 Software Tools

- Arduino IDE (for ESP32 programming)
- Visual Studio Code (for web interface and auxiliary development)
- Mosquitto MQTT broker
- KiCad (PCB design)

4.3 Communication Protocols Used

One of the core goals of this project was to practice different communication protocols used in embedded systems. The implemented protocols include:

- **UART**: Communication with the fingerprint sensor
- **SPI**: Communication with the RFID RC522 module
- **I^2C**: Communication with the LCD display

- **HTTP**: Hosting and serving the web interface directly from the ESP32
- **MQTT**: Real-time data exchange between the ESP32 and a PC

For MQTT, a Mosquitto broker was installed on the PC. Due to time constraints, full integration with a Python–Flask application was not completed. However, MQTT was successfully used to:

- Continuously read DHT11 sensor data in real time on the PC
- Remotely control the room lighting (on/off)

5. System Architecture and Operation

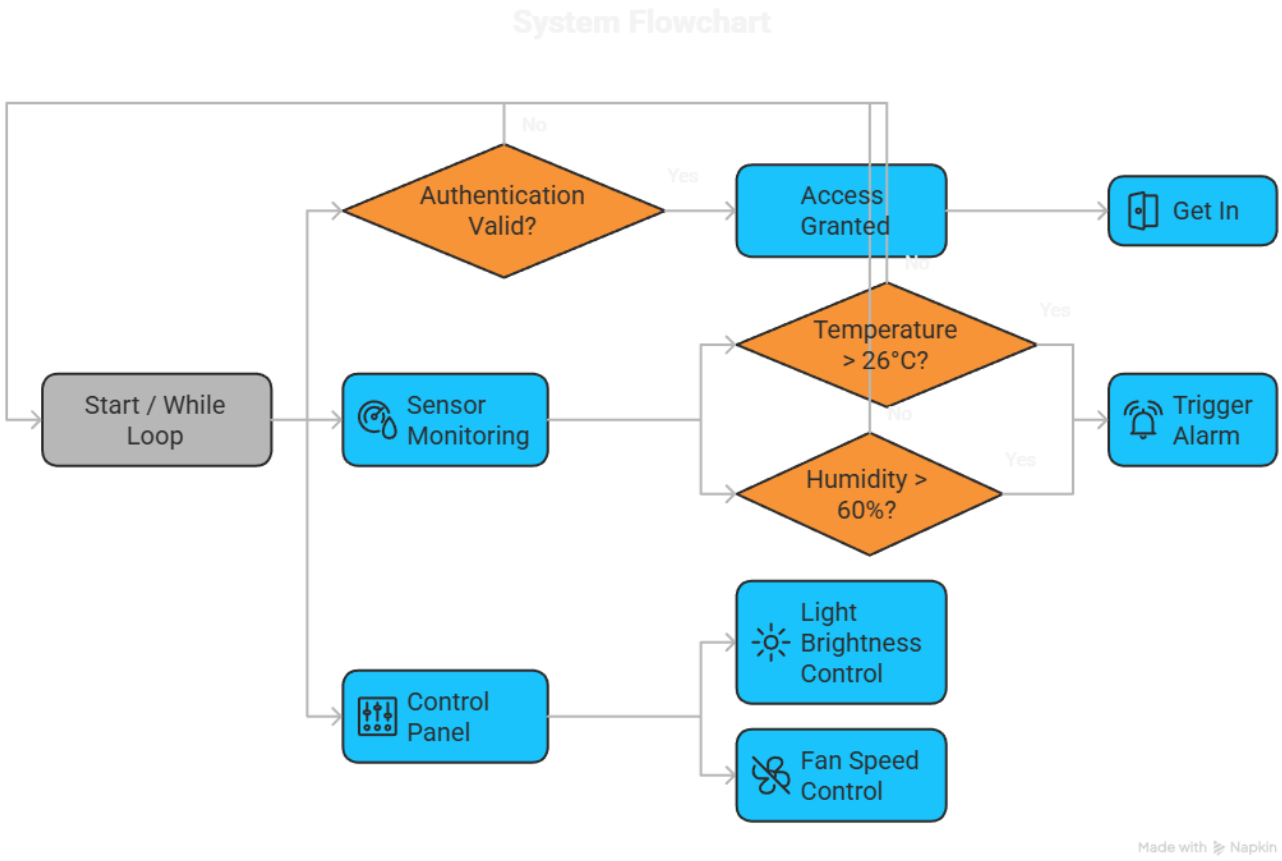

5.1 Access Control Mechanism

The access control system is based on **double authentication**:

1. **Fingerprint authentication**: The user scans their fingerprint. If it matches a registered employee, the system proceeds to the next step; otherwise, access is denied.
2. **RFID authentication**: After successful fingerprint verification, the user scans their RFID card. If the card is valid, access is granted; otherwise, it is denied.

This verification process is required for both log-in and log-out operations. Each successful or failed attempt is recorded and displayed in the access history table on the web interface.

5.2 Environmental Monitoring

The system continuously measures:

- Temperature
- Humidity

using a **DHT11 sensor** installed inside the room. Values are updated in real time and displayed on the web interface. If the measured values exceed predefined safe limits, a visual alert is triggered, indicating potentially harmful conditions for the equipment.

5.3 Actuator Control

Two actuators are simulated using LEDs:

- A blue LED simulates a fan or ventilation system to regulate temperature
- An orange LED simulates room lighting intensity

These actuators are controlled remotely through the web interface, demonstrating how actual equipment could be managed from a distance.

5.4 Full System Circuit :

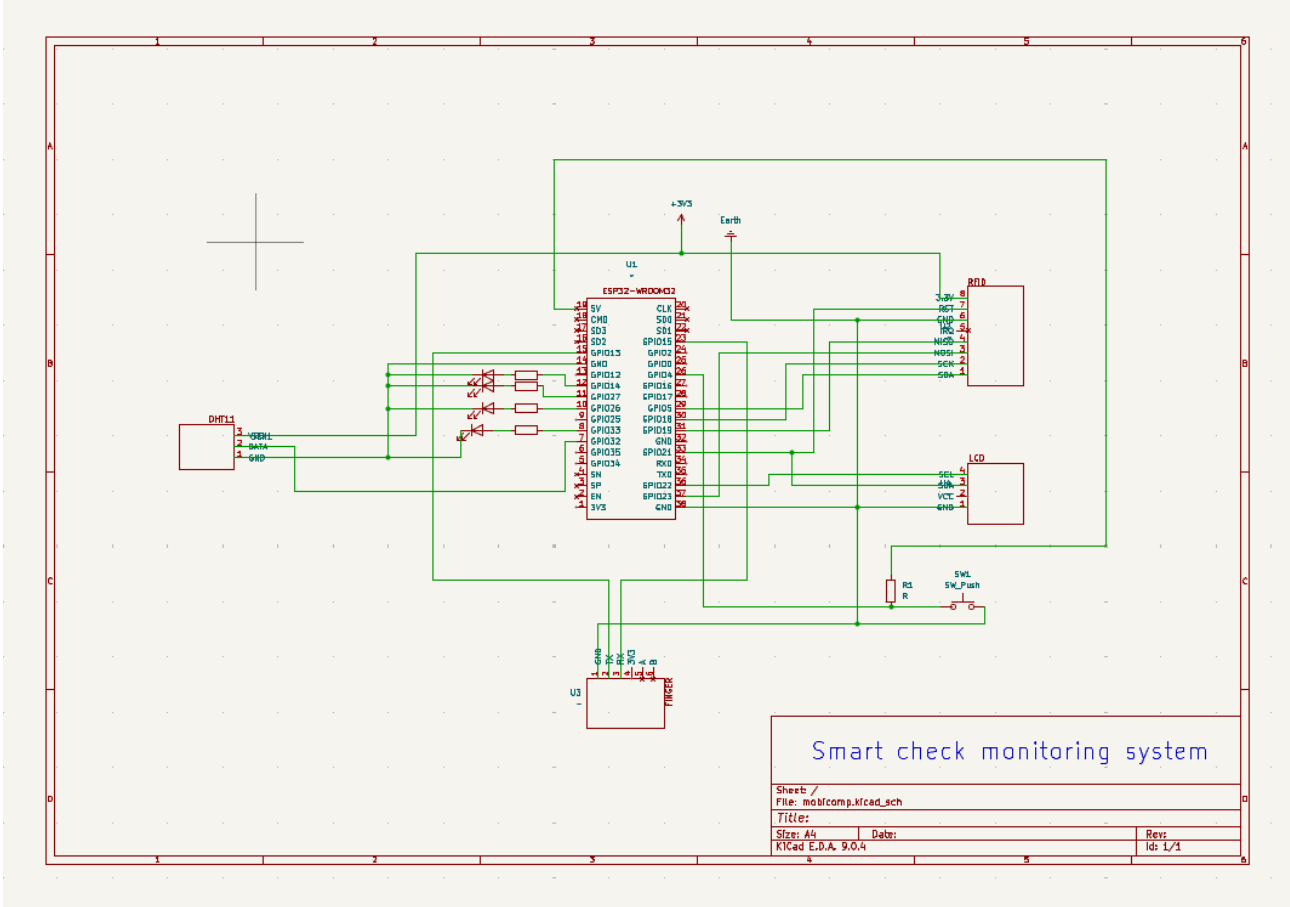

6. Practical Use of Communication Protocols

SPI Protocol – RFID Reader Communication

The RFID module communicates with the ESP32 through SPI. The SPI interface is initialized using the MFRC522 driver, with the ESP32 as the master device:

```
MFRC522DriverPinSimple ss_pin(5);

MFRC522DriverSPI driver{ss_pin};

MFRC522 mfrc522{driver};

mfrc522.PCD_Init();
```

When a card is presented, the ESP32 retrieves the card’s UID and checks it against the authorized users database.

I²C Protocol – LCD Display Communication

The LCD provides local feedback and communicates with the ESP32 over I²C:

```
Wire.begin(21, 22);
LiquidCrystal_I2C lcd(0x3F, 16, 2);
lcd.init();
lcd.backlight();
lcd.setCursor(0,0);
lcd.print("Ready");
lcd.setCursor(0,1);
lcd.print("Scan card");
```

This allows real-time visual feedback without interfering with other protocols.

UART Protocol – Fingerprint Sensor Communication

The fingerprint sensor communicates via UART:

```
Serial2.begin(57600, SERIAL_8N1, FP_RX, FP_TX);
Adafruit_Fingerprint finger(&Serial2);
```

Fingerprint acquisition, image processing, and identification occur through serial command exchanges, combined with RFID verification for enhanced security.

GPIO Digital Communication – DHT11 Sensor

The DHT11 communicates via a digital GPIO using a single-wire protocol:

```
#define DHTPIN 32
DHT dht(DHTPIN, DHTTYPE);
dht.begin();
float t = dht.readTemperature();
float h = dht.readHumidity();
```

Sensor data are read periodically for local display and remote transmission.

Wi-Fi and HTTP Protocol – Web Interface

The ESP32 connects to a local Wi-Fi network and hosts an HTTP server:

```
WiFi.begin(ssid, password);
WebServer server(80);
```

server.begin();

Endpoints serve dynamic web pages and data:

Home page : server.on("/", handleHome);

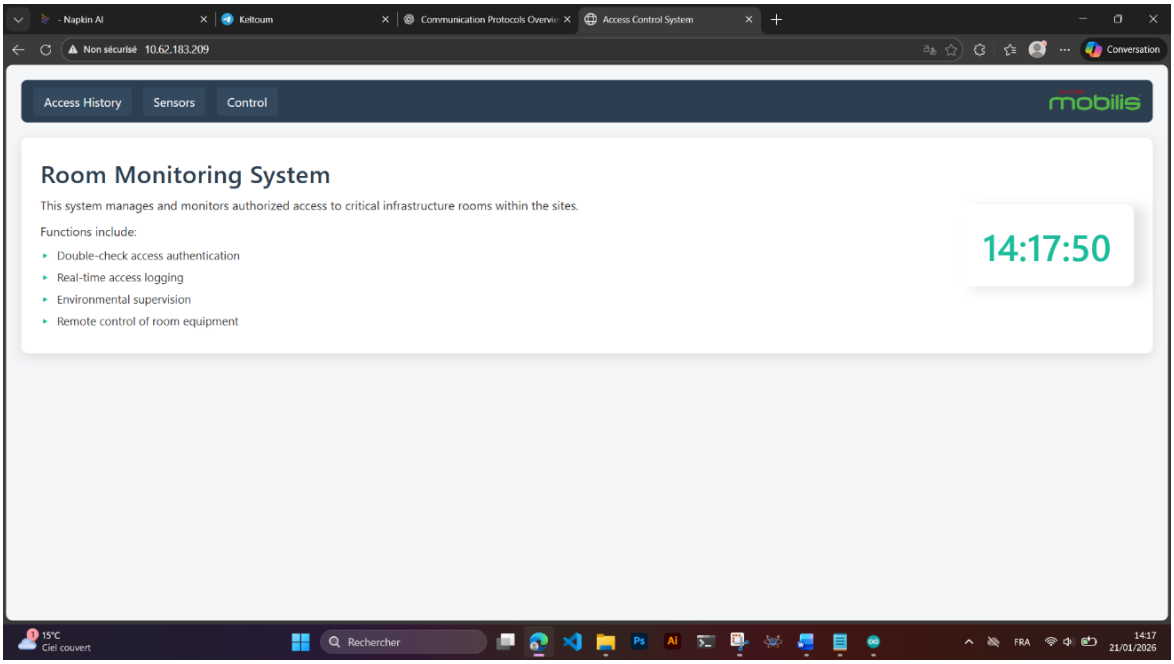

Acces history page : server.on("/acces_history", handleacces_history);

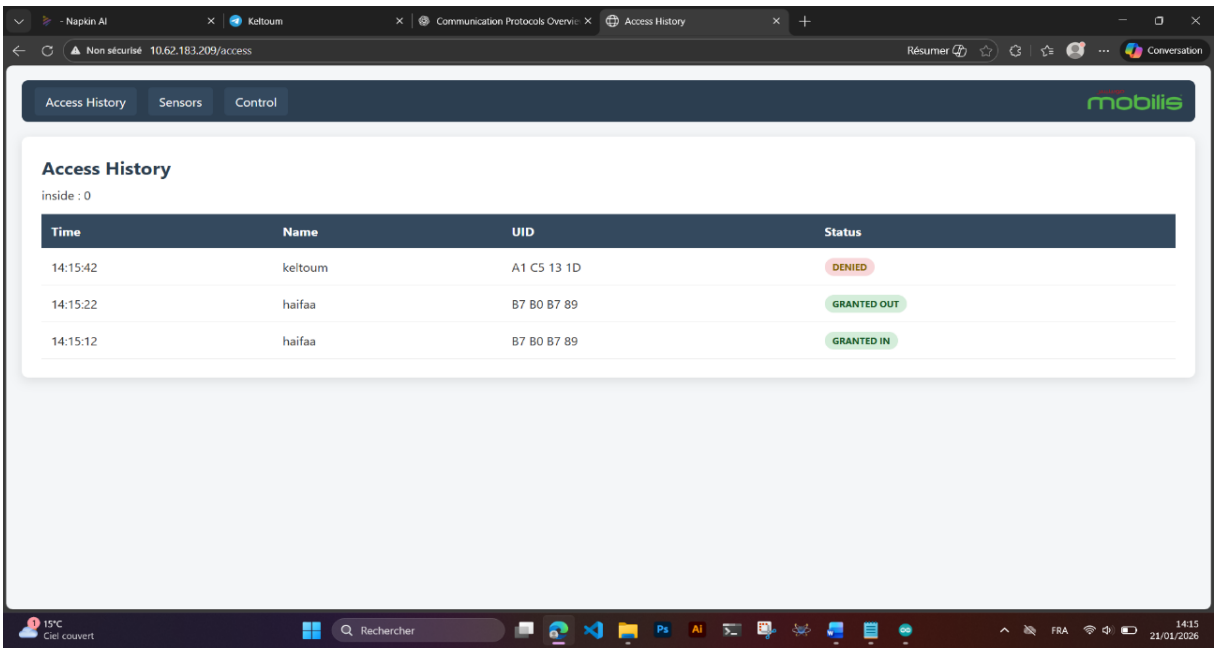

Sensor page : server.on("/sensors", handleSensors);

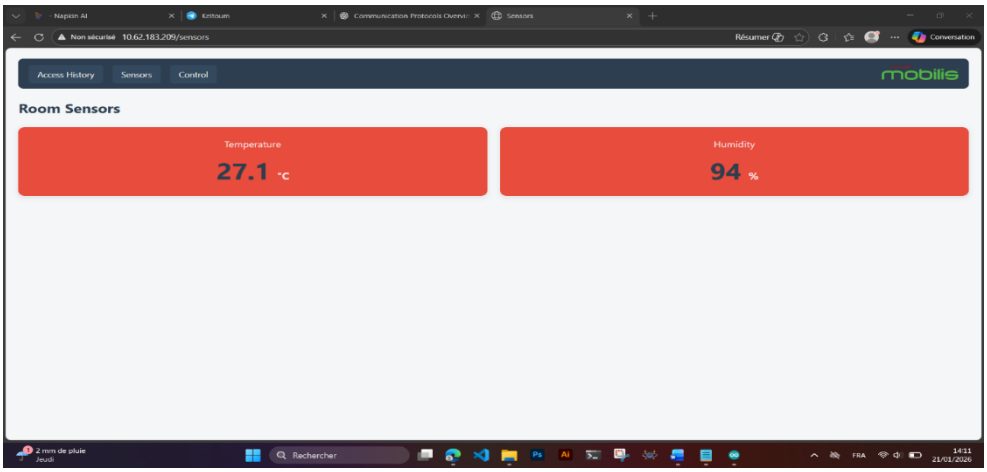

Control page : server.on("/control", handleControl);

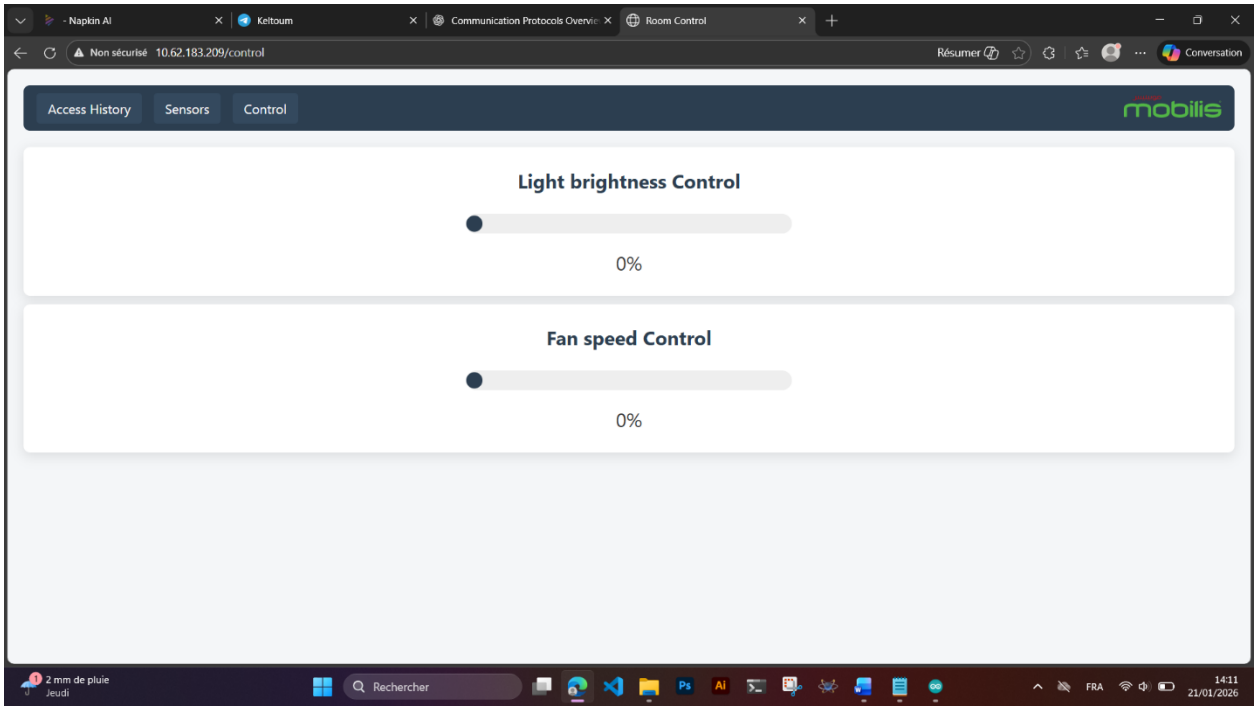

server.on("/data", handleData);

Static resources are served via SPIFFS.

Time Synchronization – NTP Protocol

To timestamp access events accurately:

configTime(3600, 0, "pool.ntp.org");

getLocalTime(&timeinfo);

Multi-Protocol Integration

The final system integrates multiple protocols:

- SPI for RFID authentication
- I²C for LCD display
- UART for fingerprint verification
- GPIO for sensor acquisition
- HTTP over Wi-Fi for monitoring and control
- NTP for time synchronization

This demonstrates the ESP32's capability to manage heterogeneous communication interfaces within a single embedded security and monitoring system.

7. Implementation of MQTT Communication (DHT11 & LED Control)

MQTT enables real-time monitoring and remote control. The ESP32 acts as both publisher and subscriber, while a PC hosts the Mosquitto broker. Sensor data (temperature and humidity) are published periodically, and LED control commands are received via subscribed topics, allowing fast, reliable communication.

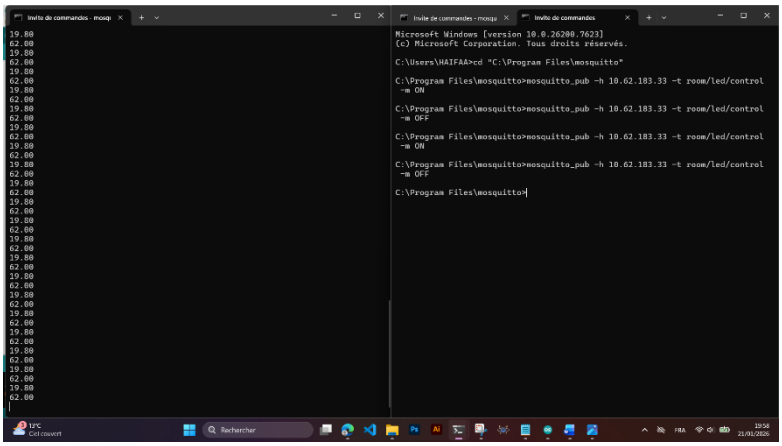

8. Choice Between HTTP and MQTT

HTTP uses a request/response model, which introduces higher latency and overhead, making it less suitable for real-time monitoring. MQTT, based on a publish/subscribe model, is lightweight, real-time, and optimized for embedded systems.

For this project, **MQTT was chosen instead of HTTP** for continuous supervision, faster response, and scalability.

9. Difficulties Encountered and Solutions

A major issue occurred when the fingerprint sensor was connected: the RFID reader stopped functioning. Initially, it was considered a software problem. With the supervisor's guidance, it was identified as a power issue and resolved by using an external power supply to independently power the RFID reader and DHT11 sensor.

10. Vision and Expectations

The system enhances security, automation, and predictive management of critical network rooms through double authentication and real-time monitoring. Logged access times and sensor data could support AI-driven predictive maintenance, fault detection, and operational optimization, establishing a foundation for intelligent management of critical infrastructures.

11. Future Improvements

Several enhancements could be considered to further improve the monitoring and access control system:

- **Electrogenes Group Control**: Integrate control and monitoring of backup generators to ensure uninterrupted power supply in case of outages.
- **Battery Level Monitoring**: Include sensors to track battery levels for critical equipment and alert when replacement or charging is needed.
- **Fire Detection System**: Implement smoke and fire sensors connected to the system to trigger automatic alerts and emergency actions.
- **Advanced Door Control**: Enhance door mechanisms with automated locking/unlocking based on multiple conditions and emergency scenarios.
- **Full MQTT-Based Interface**: Transition the entire web interface and control system to MQTT to optimize real-time data exchange and reduce dependency on HTTP.
- **Use of a Microcontroller as Broker**: Replace the PC broker with a microcontroller like a Raspberry Pi to create a more compact, dedicated, and energy-efficient MQTT broker solution.

These improvements would increase system reliability, scalability, and safety, further aligning the project with modern IoT and smart infrastructure standards.

Conclusion du Chapitre :

Ce dernier chapitre a été consacré à la réalisation pratique du projet développé durant le stage. Il a permis de mettre en œuvre concrètement les connaissances acquises sur les systèmes embarqués et les protocoles de communication. La conception d'un système de contrôle d'accès sécurisé et de supervision environnementale a démontré l'efficacité de l'ESP32 dans la gestion simultanée de plusieurs interfaces de communication.

L'intégration de protocoles tels que SPI, I²C, UART, HTTP et MQTT a illustré la capacité d'un système embarqué à répondre aux exigences de sécurité, de supervision et de contrôle à distance dans un environnement industriel. Les difficultés rencontrées et les solutions apportées ont renforcé l'aspect pédagogique du projet, tout en ouvrant des perspectives d'amélioration et d'évolution vers des systèmes plus intelligents et autonomes.

Conclusion:

During our internship at **Mobilis**, we explored the architecture and organization of critical telecom infrastructures, including networks, cloud systems, and secure access protocols. We gained practical insight into how sensitive centers are monitored and protected.

As part of our work, we developed an **embedded system project** for controlled room access and real-time environmental monitoring. This allowed us to apply our knowledge of sensors, authentication, alarms, and control panels in a real industrial context.

Overall, the internship strengthened our understanding of **industrial supervision, security, and automation**, and provided valuable hands-on experience in embedded systems and communication protocols.

Sources and bibliography :

- https://www.emqx.com/en/blog/esp32-connects-to-the-free-public-mqtt-broker
- https://randomnerdtutorials.com/what-is-mqtt-and-how-it-works/
- https://docs.espressif.com/projects/esp-protocols/esp_mqtt_cxx/docs/latest/index.html
- https://letmeknow.fr/fr/blog/180-tuto-mqtt-sur-esp32--mosquitto
- https://esp32io.com/tutorials/esp32-mqtt#google_vignette
- https://www.schemalyzer.com/en/blog/easyeda/tutorials/complete-easyeda-tutorial-2025
- https://randomnerdtutorials.com/install-esp32-filesystem-uploader-arduino-ide/