Multimedia Technology Group

Lossy audio coding (compression)

František Rund
xrund@fel.cvut.cz

Czech Technical University in Prague
Faculty of Electrical Engineering
Department of Radioelectronics

Technická 2
166 27 Prague 6

Department of
Radioelectronics
K13137

B2M37KAS

Contents

- **Introduction – lossy audio coding**
  - Requirements for audio coding system
  - Structure of a lossy audio coder
- **Block diagram**
  - Filter bank
  - Perceptual model
  - Quantization and coding
  - Frame packing
  - Additional coding tools
- **Coding of multichannel audio**
  - Review – recording of stereo signal
  - Joint stereo
  - M-S stereo coding
  - Intensity stereo coding
- ***Artifacts of a lossy coding***
- ***NEXT: audio lossless and lossy standards***

Coding of multichanel HiRes audio

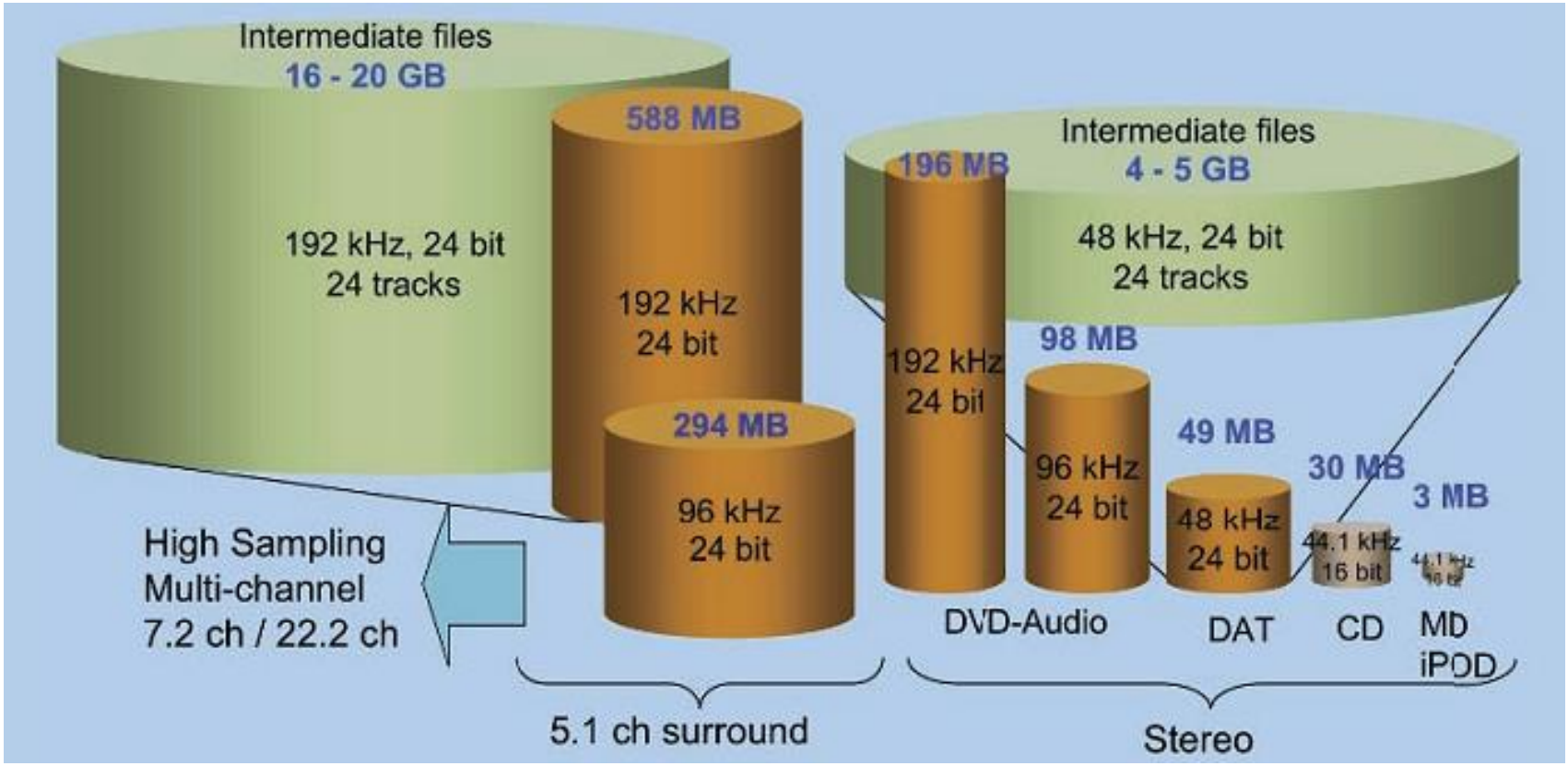

Rumsey, F: High Resolution Audio, J. Audio Eng. Soc., Vol. 55, No. 12, December 2007

Lossy compression

- **Irrelevance reduction**
- **Psychoacoustic model**
  - Hearing threshold
  - Critical bands
  - Masking

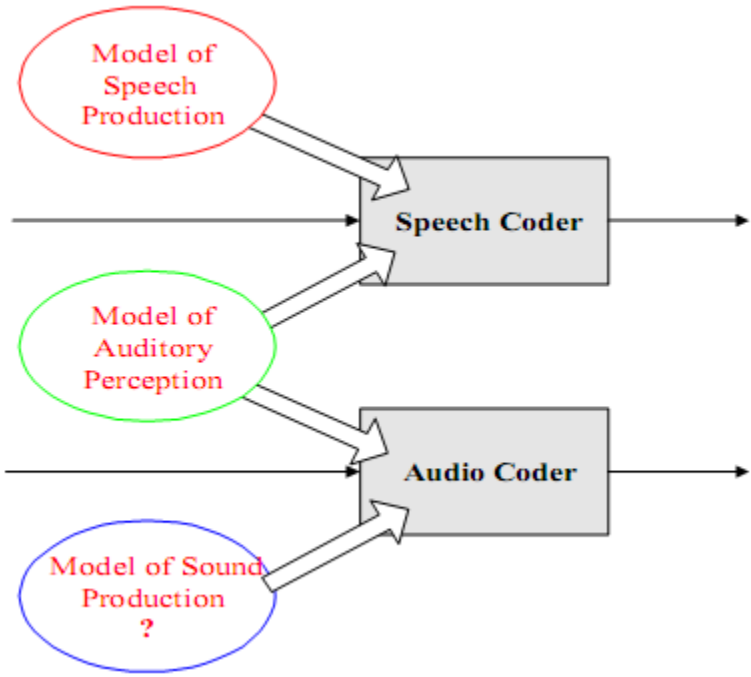

- **Subjective quality assessment**

Mean opinion score	Impairment scale
5	Imperceptible
4	Perceptible, but not annoying
3	Slightly annoying
2	Annoying
1	Very annoying

Requirements for audio coding systems

- **Compression efficiency – bit rate**
- **Absolute achievable quality**
- **Complexity**
  - Computational complexity
  - Storage requirements
  - Encoder versus decoder complexity
- **Algorithmic delay – for broadcasting ~ 100 ms**
- **Editability – one sample/frame size (e.g. 24 ms)/no editability**
- **Error resilience – errors in transmission channel**

- **Source coding –** removal of redundancy, statistical properties of signal (source) – known model of generation of the signal
- **Perceptual coding**
  - Removal of the data irrelevant to the auditory system
  - To minimize noise audibility

Kahrs, M, Brandenburg, K, Applications of Digital Signal Processing to Audio and Acoustics, Kluwer 1998

Perceptual (lossy) coding

„The basic idea about perceptual coding of high quality digital audio signals is to hide the quantization noise below the signal dependent thresholds of hearing“ **K. Brandenburg, Perceptual coding of high quality digital audio**

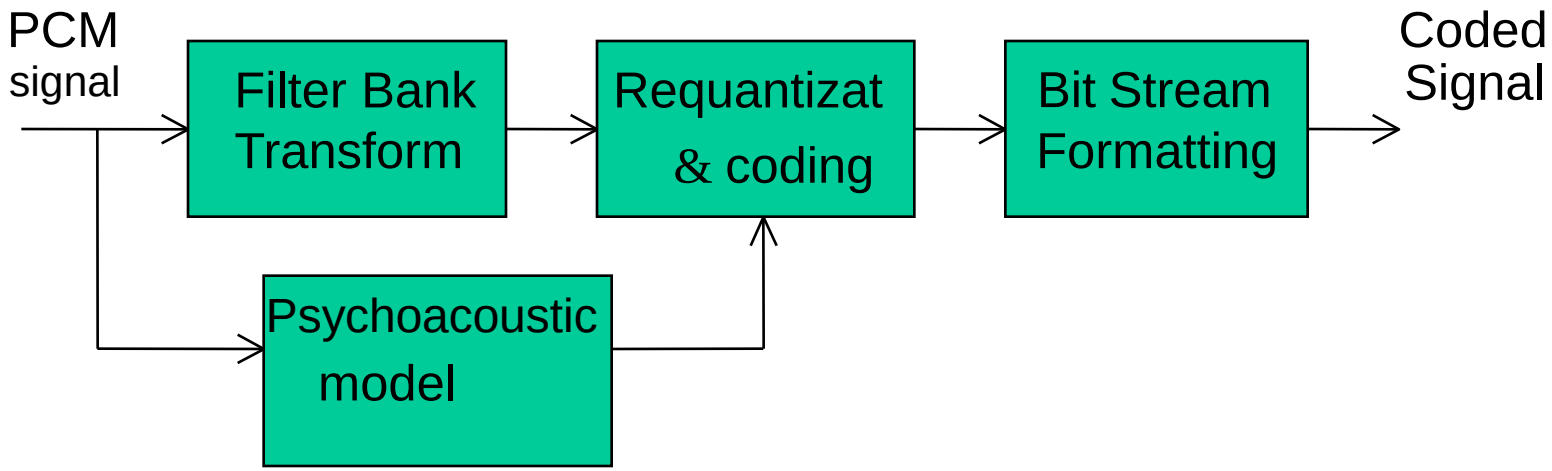

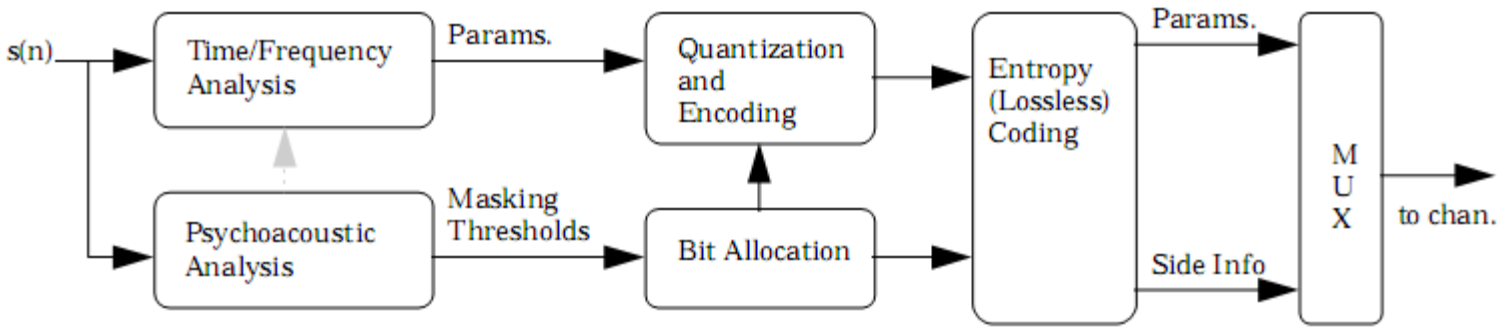

Kahrs, M, Brandenburg, K, Applications of Digital Signal Processing to Audio and Acoustics, Kluwer 1998,

Basic ideas of perceptual coding

- **Basic tools**
  - **Filter bank** – decomposes the input signal into subsampled spectral components
  - **Perceptual model** – estimates the actual (time dependent) masking threshold
  - **Quantization and coding** – quantizes and codes the signal with the aim of keeping the quantization noise below the masking threshold.
  - **Frame packing** – format the bitstream (quantized and coded spectral coefficients + side information)
- **Additional tools**
  - Prediction
  - Temporal noise shaping
  - M/S stereo coding
  - Intensity stereo coding
  - Coupling channel
  - Stereo prediction
  - Spectrum flattening

Kahrs, M, Brandenburg, K, Applications of Digital Signal Processing to Audio and Acoustics, Kluwer 1998

Filter banks

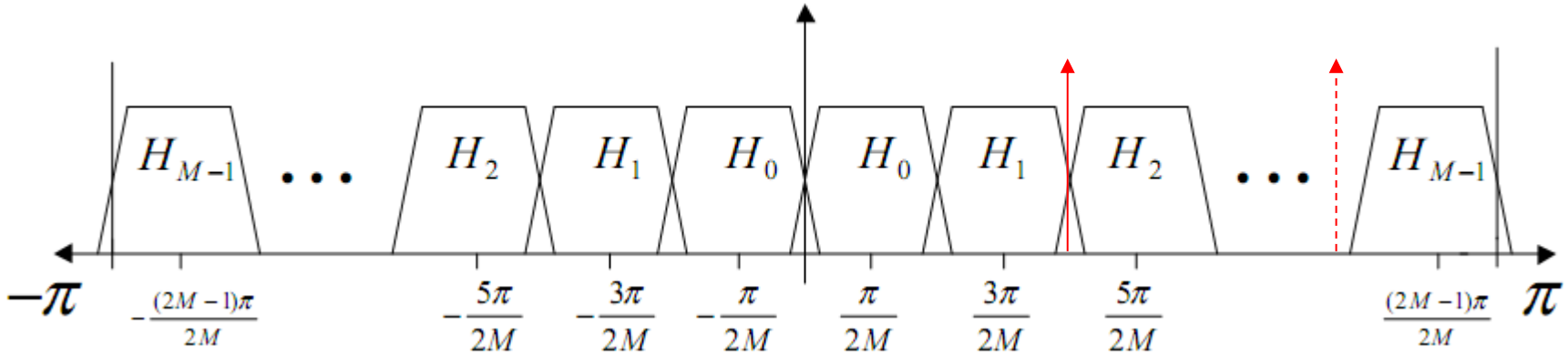

if 512 samples

32 bands

It means 16 smpls/band

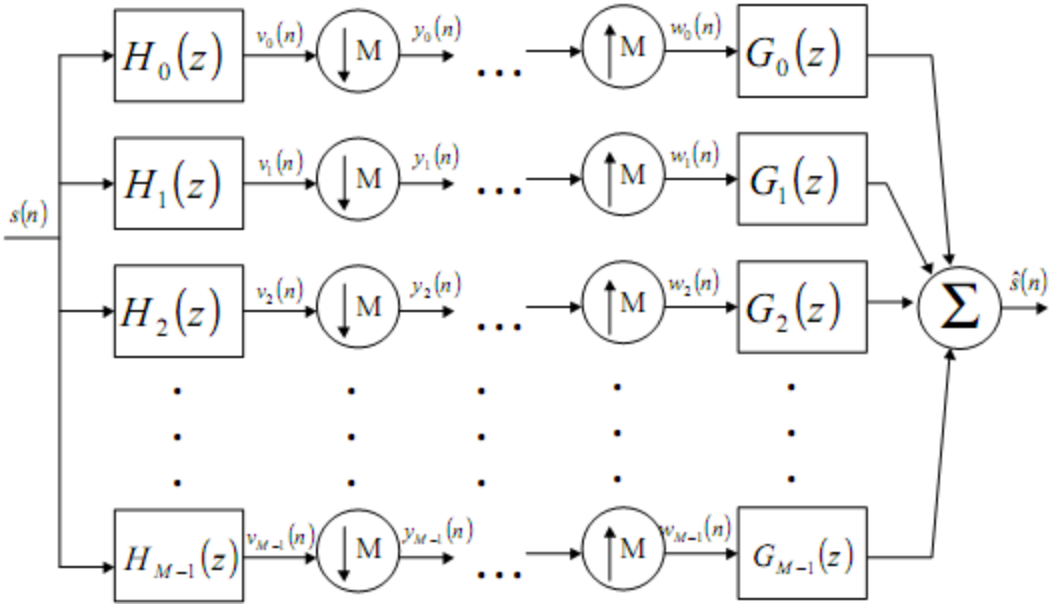

Painter, Spanias - Perceptual Coding of Digital Audio

Filter banks

- ***n*-channels, downsampling by *k* (critical sampling for *k*=*n*)**
- **Parameters**
  - **Frequency resolution**
    - Low resolution filter banks (e.g. 32 subbands) – coding in time domain – **subband coders**
    - High frequency resolution filter banks (e.g. 512 subbands) – coding in frequency domain – **transform coders**
  - **Perfect reconstruction** – lossless reconstruction if no quantization
  - **Prototype window** – windowing function
  - **Uniform/non-uniform frequency resolution**
  - **Static/adaptive filter bank** – preventing pre-noise (pre-echo)

Kahrs, M, Brandenburg, K, Applications of Digital Signal Processing to Audio and Acoustics, Kluwer 1998

Filter banks

- **Quadrature Mirror Filter banks – two way split – a tree of filters**
  - Non-perfect reconstruction – audible artifacts
  - Long system delay (e.g. 250 ms for resolution similar to critical bands)
- **Wavelet based filter banks**
- **Polyphase filter banks – equally spaced filter banks**
  - Advantages of QMF
  - Low complexity
- **Fourier Transform based filter banks (DFT, DCT)**
  - Windowing, overlap and add
  - Low complexity
  - Today is MDCT more used than DCT/DFT
- **Time domain aliasing cancellation based filter banks (MDCT)**
- **Hybrid filter banks**
  - Cascade of different types of filterbanks – different frequency resolution
  - Increased complexity, problems with aliasing
- **Adaptive filter banks**
  - Changing the resolution

Kahrs, M, Brandenburg, K, Applications of Digital Signal Processing to Audio and Acoustics, Kluwer 1998

Wavelet decomposition

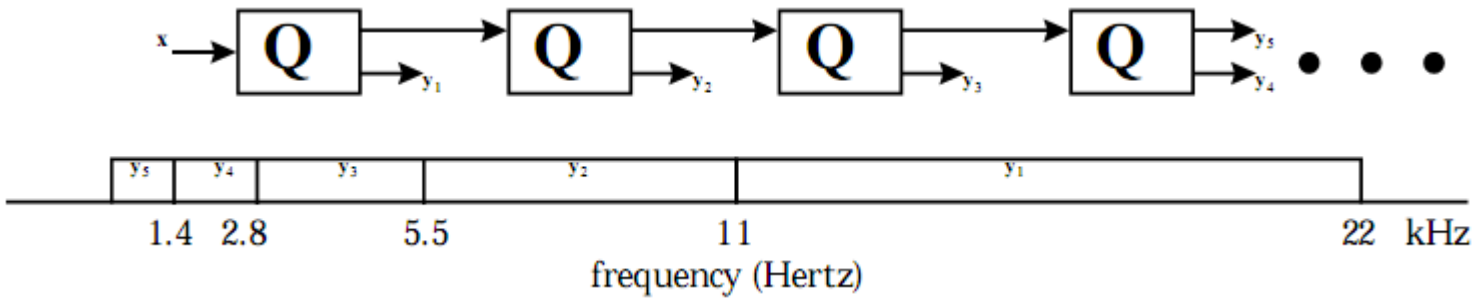

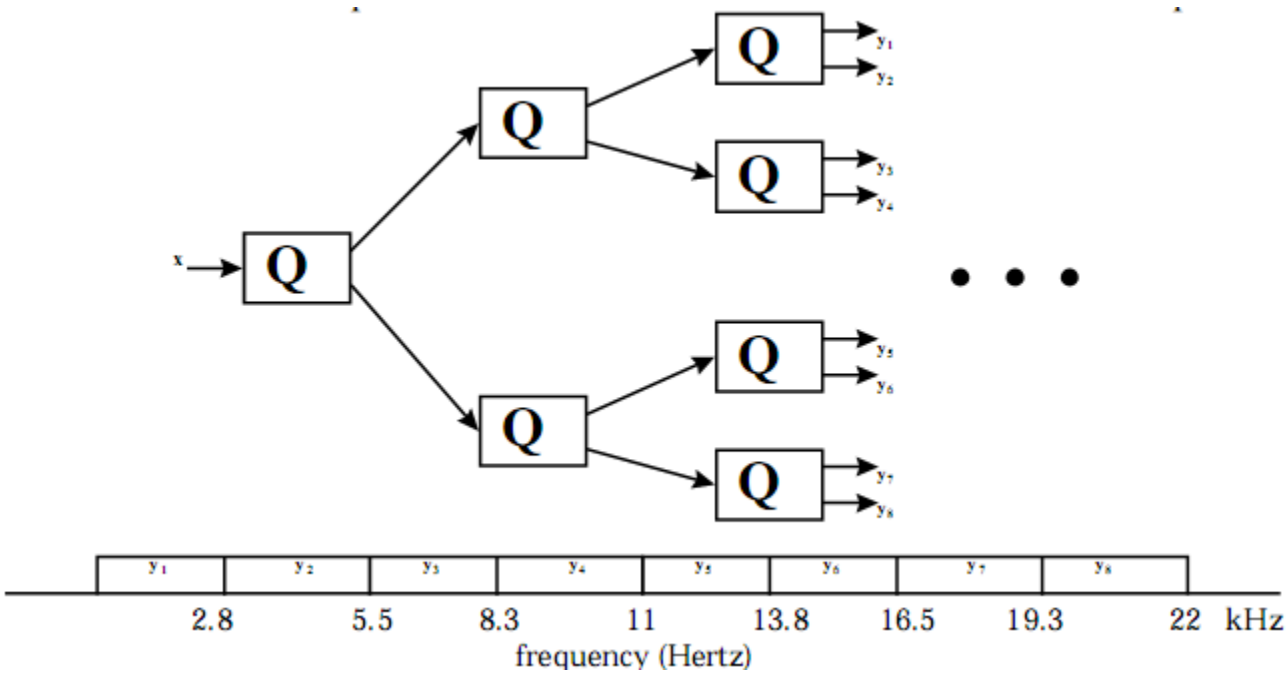

Painter, Spanias - Perceptual Coding of Digital Audio

Wavelet Packet Analysis Filter Bank Optimized for Minimum Bitrate

- **Example of non-uniform filterbank (critical bands approximation)**

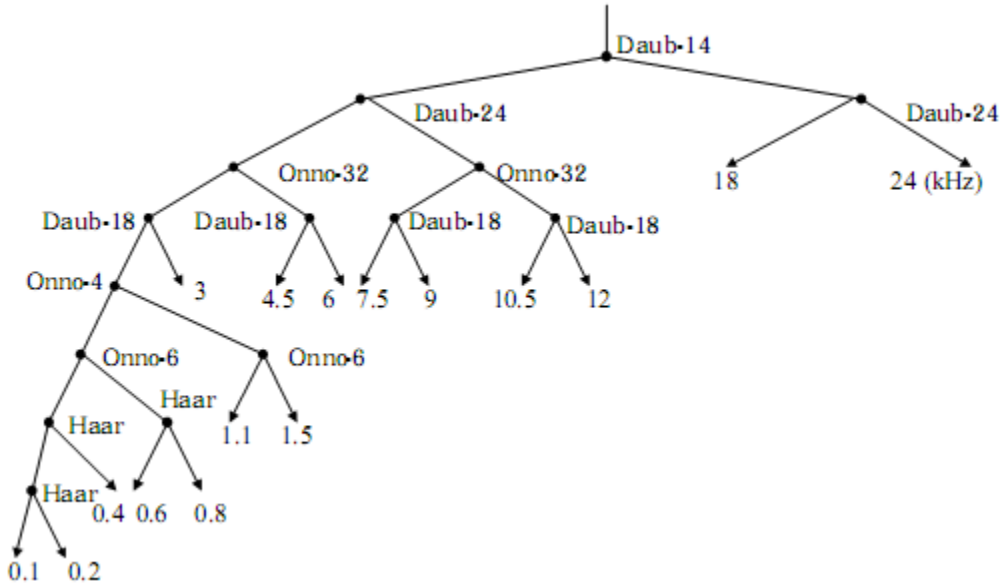

MDCT - overlap and add

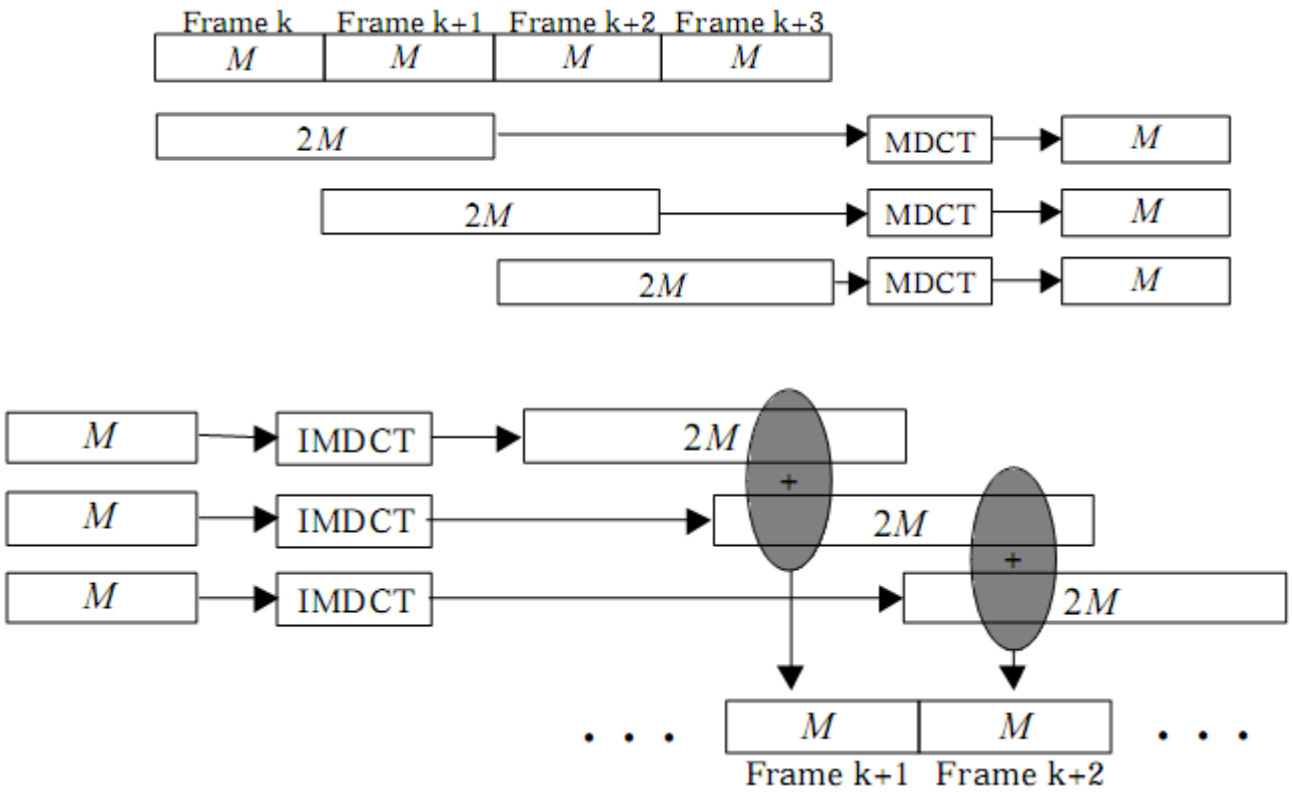

MDCT

- Time domain aliasing cancelation based filter bank
- Time window

$$w(2M-1-n)=w(n)$$

$$w^2(n)+w^2(n+M)=1$$

- Sine window

$$w(n)=\sin\left[\left(n+\frac{1}{2}\right)\frac{\pi}{2M}\right]$$

- MDCT

$$X(k)=\sum_{n=0}^{2M-1}x(n)h_k(n) \qquad 0\le k\le M-1$$

$$h_k(n)=w(n)\sqrt{\frac{2}{M}}\cos\left[\frac{(2n+M+1)(2k+1)\pi}{4M}\right]$$

- Frequency domain subsampling – critical sampling

IMDCT

- **Synthesis window**

$$g_k(n) = h_k(2M - 1 - n)$$

$$x(n) = \sum_{k=0}^{M-1} \left[X(k) h_k(n) + X^P(k) h_k(n + M) \right]$$

where $X^P(k)$ denotes the previous block of transform coefficients.

Windows

- **Shape**

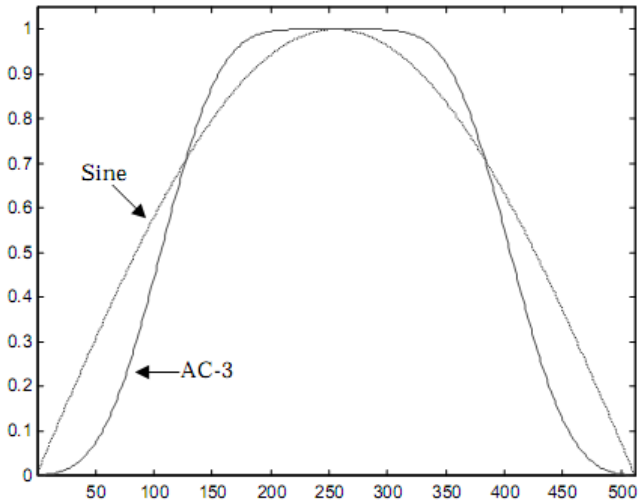

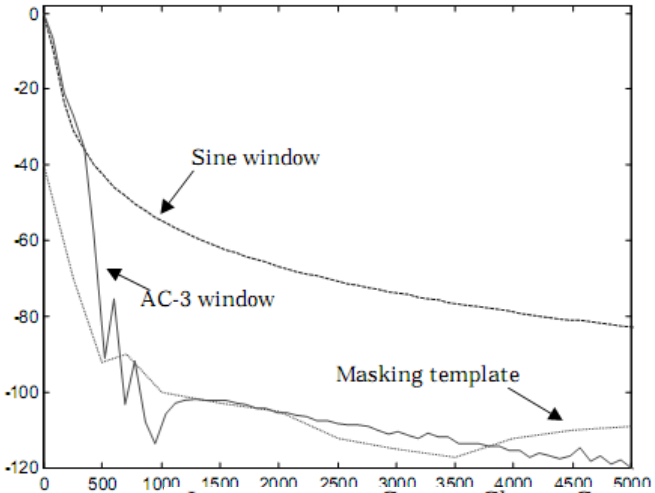

- **Time-varying – preventing Preecho**

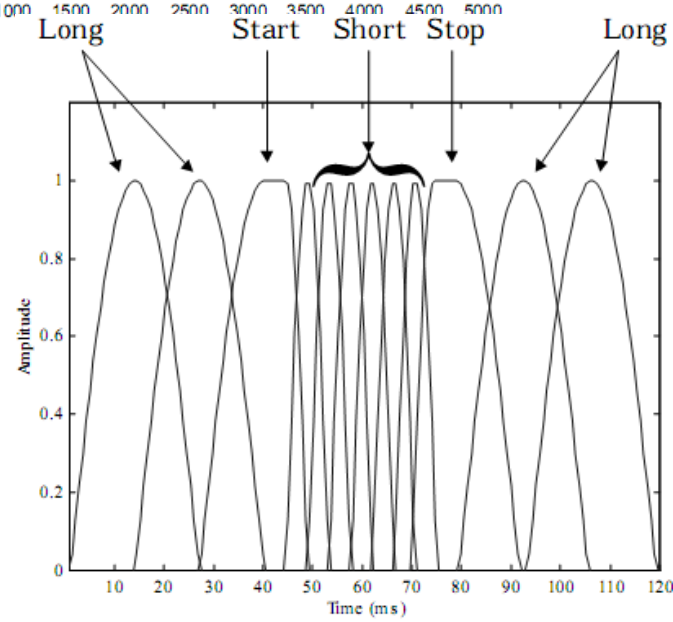

Pre-echo

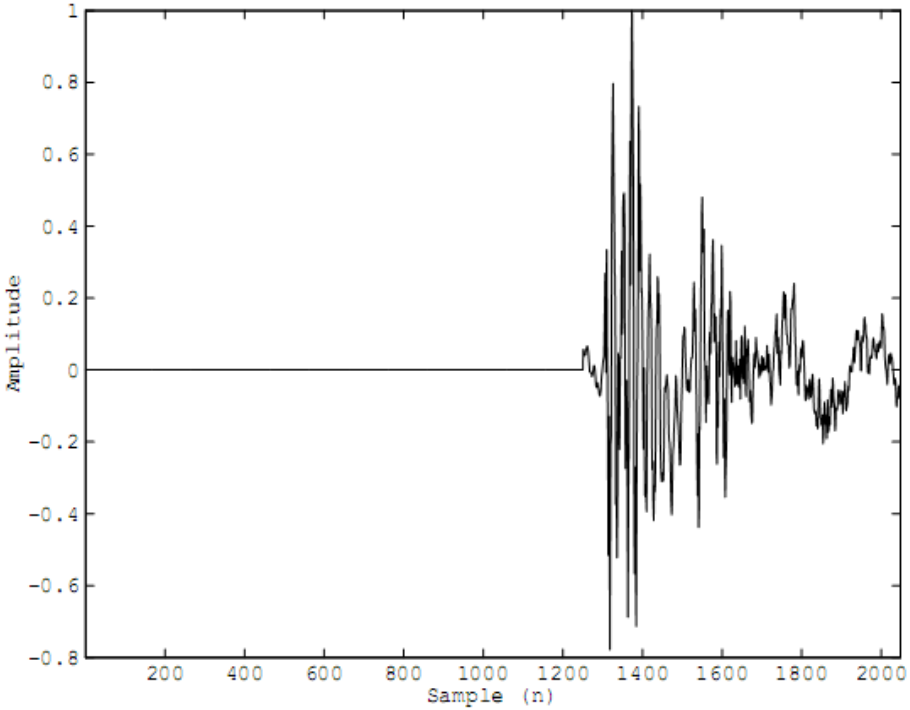

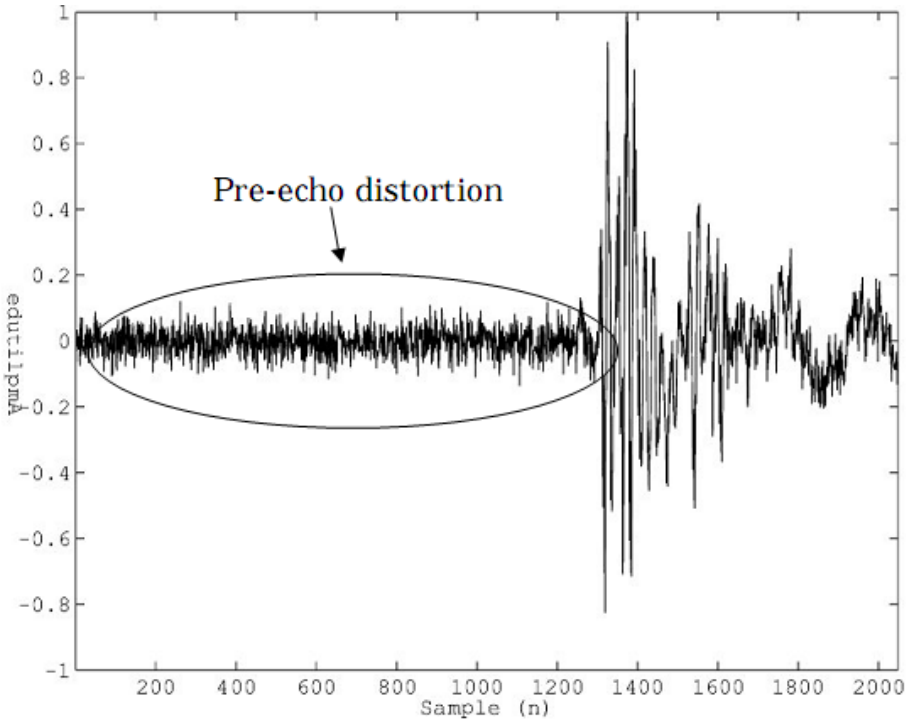

- **Solutions?**
  - Bit reservoir
  - Window switching
  - Hybrid/switched filterbanks
  - Gain modifications
  - TNS

Pre-echo

- **Gain modification**
  - smoothes transient peaks in the time-domain
  - Inverse operations at the decoder
- **Temporal noiseshaping**
  - Linear prediction (LPC) applied to a spectrum of a transient,
  - coeff. transmitted as SI
  - The residual quantized and encoded using PM
  - Convolution/multiplication
  - FB compatible

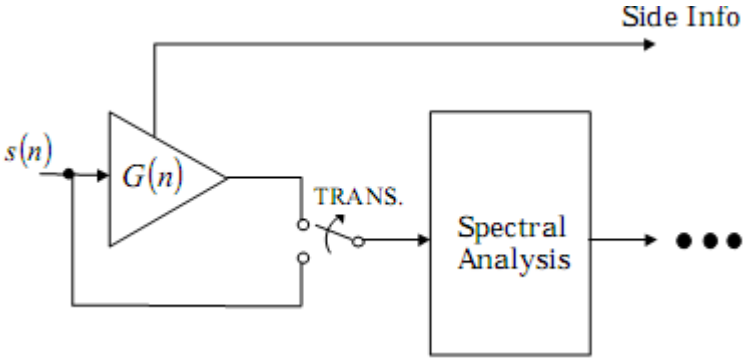

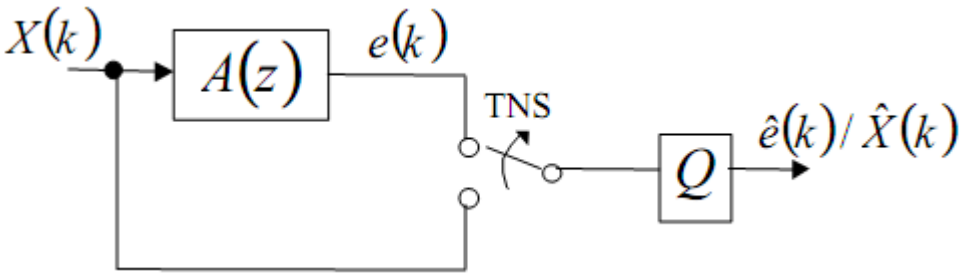

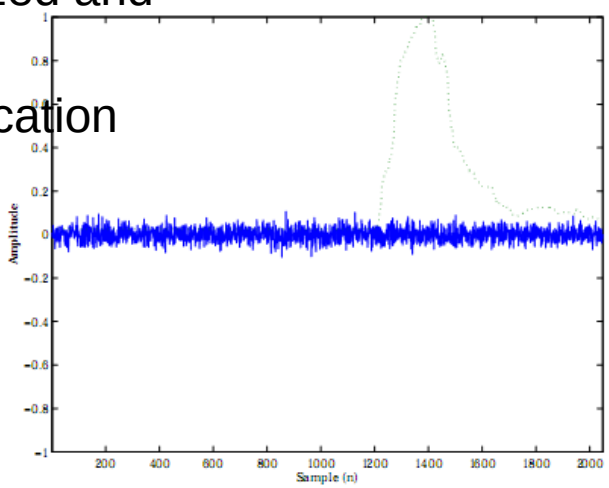

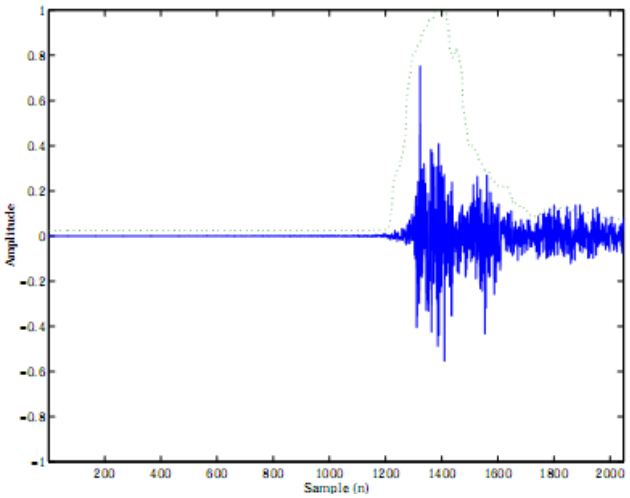

Perceptual models

- **A lot of systems just define the transmission format – improvement in encoder is possible**
- **Functions**
  - To deliver accurate estimates of the allowed noise according the time/frequency resolution of the coding system – **masking threshold**
  - The control of adaptive block switching for adaptive filter banks
  - The control of a bit reservoir if applicable
  - The control of joint stereo coding tools like M/S and/or intensity coding

- **Trivial example – a static model n=SNR/6.02**

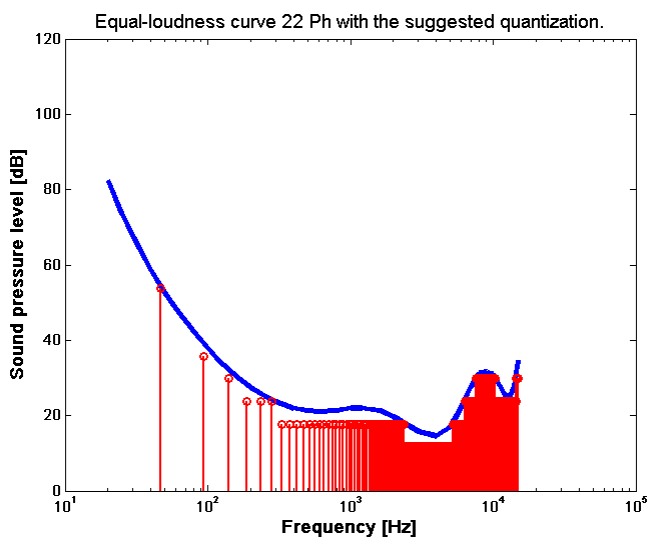

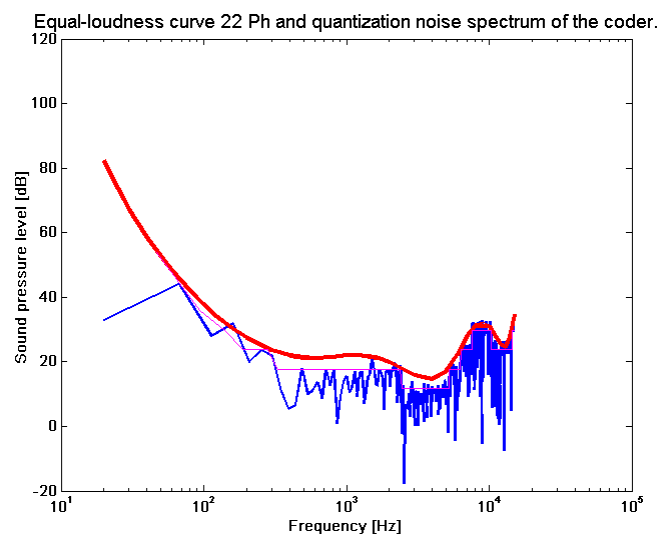

Psychoacoustic model MPEG

1. **Spectral analysis and SPL normalization**
2. **Identification of tonal and noise maskers**
3. **Decimation and reorganization**
4. **Calculation of individual masking thresholds**
5. **Calculation of global masking thresholds**

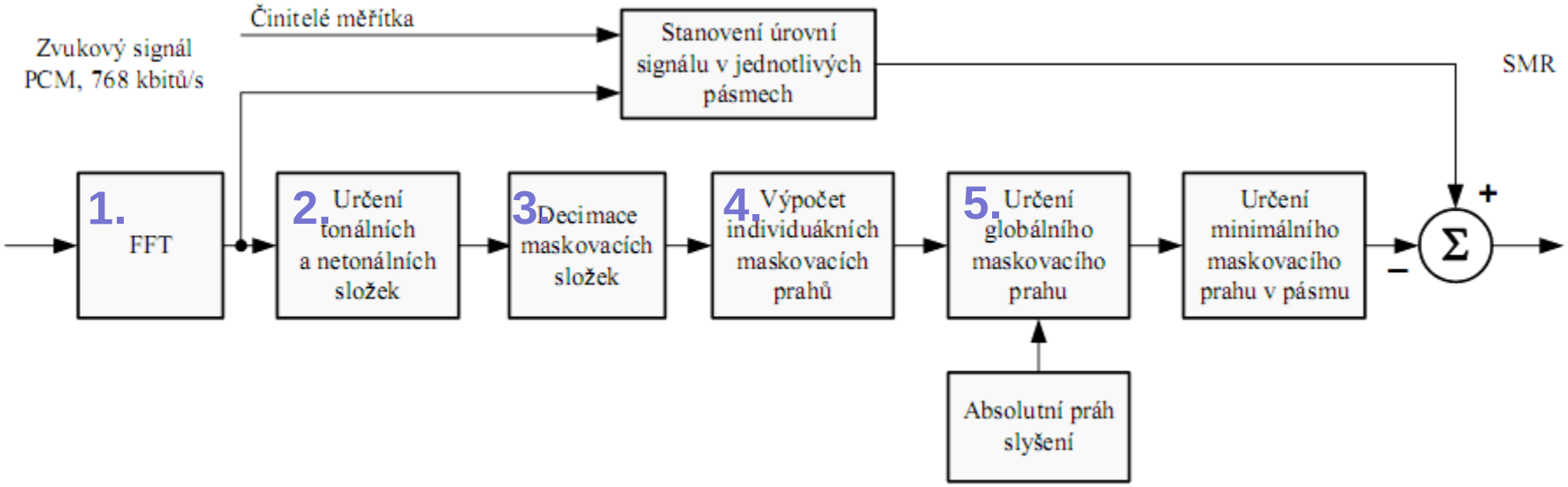

Kadlec, F. Zpracování akustických signálů. ČVUT 2002

Psychoacoustic model MPEG

1.

2.

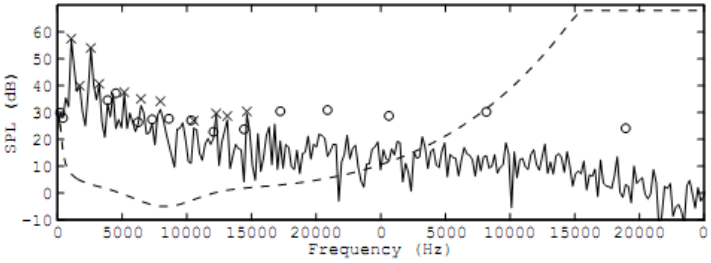

3.

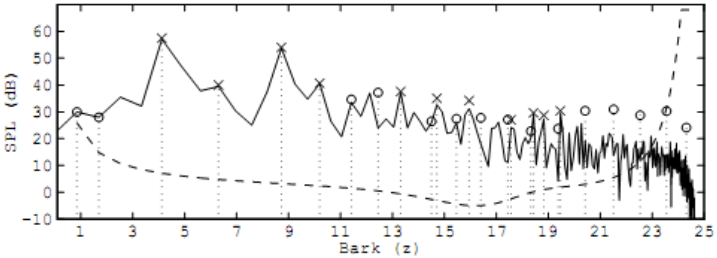

4.

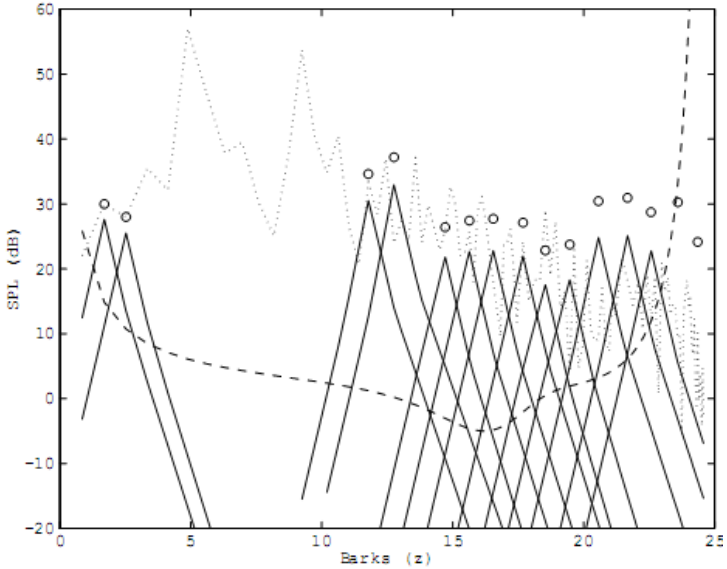

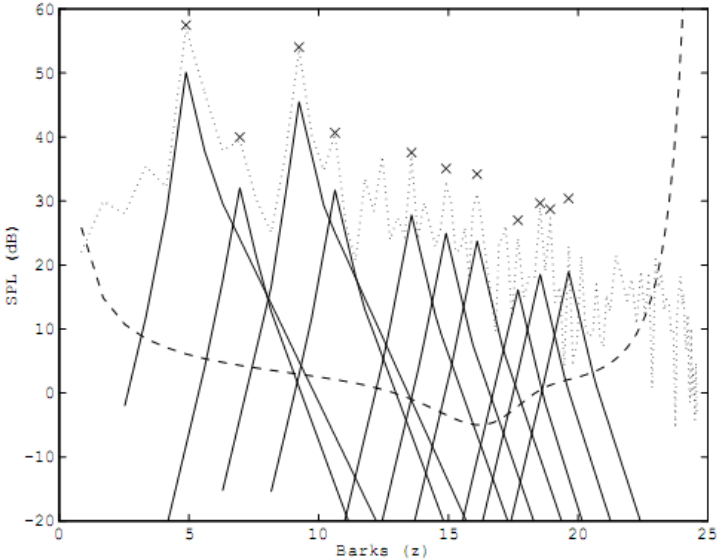

4.

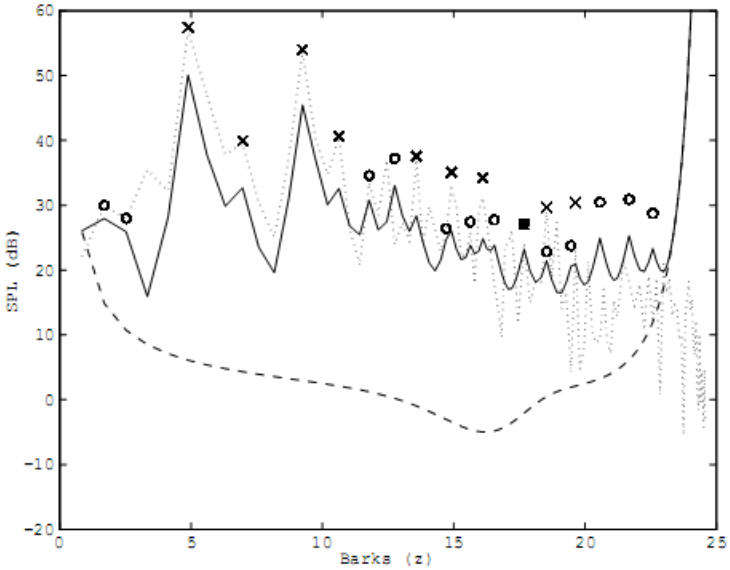

5.

Painter, Spanias - Perceptual Coding of Digital Audio

Prediction

- Improves the redundancy reduction especially for near stationary signals
- Stationary signals = long windows
- Prediction on spectral coefficients – bank of predictors
- For high resolution bank - backward adaptive predictors

Kahrs, M, Brandenburg, K, Applications of Digital Signal Processing to Audio and Acoustics, Kluwer 1998

Perceptual coding

- **Signal to Noise Ratio**
  - Number of bits
  - *Subjective quality?*
- **Noise to Masker Ratio**
  - Measure of quality
  - Below 0
- **Signal to Masker Ratio**
  - Determines the number of bits

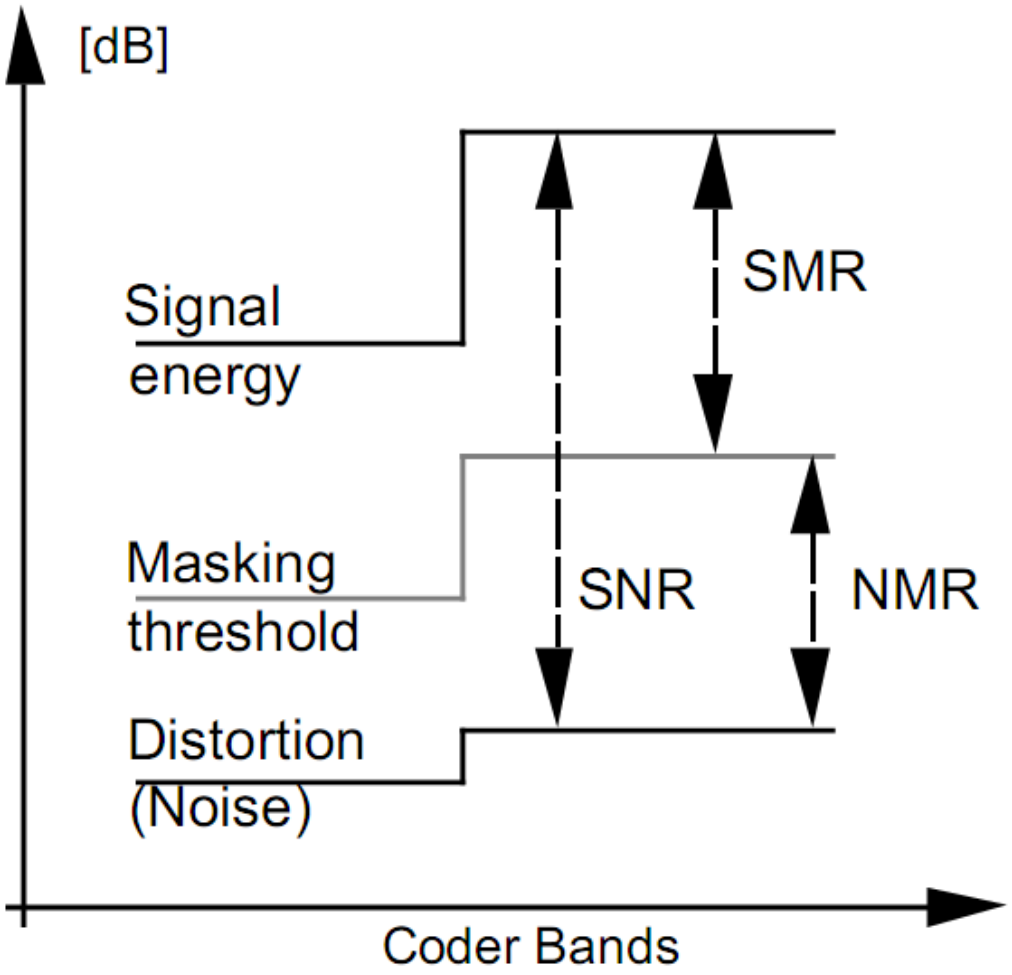

Herre, Temporal Noise Shaping, Quantization and Coding Methods in Perceptual Audio Coding: A Tutorial Introduction. AES 17th Conf. 1999

Quantization and coding

- **Quantization alternatives – uniform quantization (exceptions)**
- **Coding alternatives – direct storage/entropy coding**
- **Quantization and coding control structures**
  - Bit allocation (direct structure) – before quantization – how many bits to each spectral component.
  - Noise allocation (indirect structure) – quantization step modified according to a perceptual model. Count of how many bits are used is done after quantization
- **Tools to improve quantization and coding**
  - Block companding (block floating point) – normalization, scale factor (exponent)
  - Non-uniform scalar quantization – (big values quantized less accurately than smaller values)
  - Vector quantization – data in form of vectors
  - Noise allocation followed by scalar quantization and Huffman coding – iteration – analysis-by-synthesis quantization control.
  - Huffman coding
  - Short time buffering (bit reservoir) – short time varying bitrate

Kahrs, M, Brandenburg, K, Applications of Digital Signal Processing to Audio and Acoustics, Kluwer 1998

Quantization and coding

	Filterbank channels	Quantization	Coding
MPEG-1/2 Layer I / II	32	uniform	block companding
MPEG-1/2 Layer III	576 / 192	non-uniform	Huffman coding
MPEG-2 AAC	1024 / 128	non-uniform	Huffman coding
MPEG-4 TwinVQ	1024 / 128 (960/120)	VQ	VQ
AC-3	256 / 128	uniform	block companding
ATRAC	96 .. 512	uniform	block companding

Herre, Temporal Noise Shaping, Quantization and Coding Methods in Perceptual Audio Coding: A Tutorial Introduction. AES 17th Conf. 1999

Encoding strategies

- **Constant quality coding – variable bitrate**

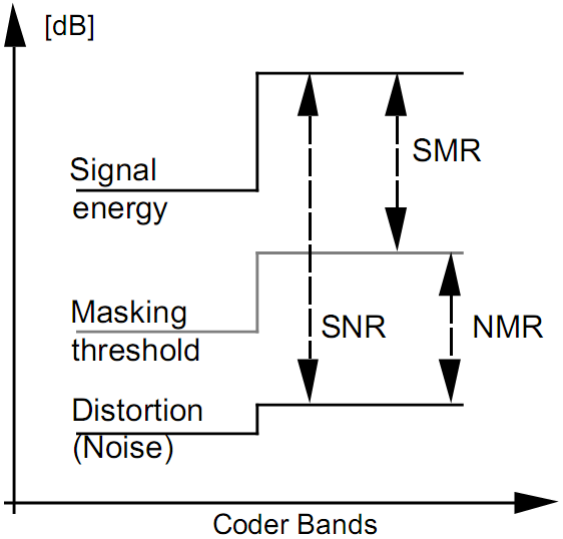

- **Constant rate coding – varying quality**
  - Bit allocation – no entropy coding
  - Noise allocation – with entropy coding
  - Analysis by synthesis – with entropy coding
- **Constrained variable rate coding – bit reservoir**
  - „Constant quality“, „constant bitrate“
  - Locally variable bitrate
  - Codec delay

Herre, Temporal Noise Shaping, Quantization and Coding Methods in Perceptual Audio Coding: A Tutorial Introduction. AES 17th Conf. 1999

Bit and noise allocation

- **Constant rate coding – varying quality**

Bit allocation

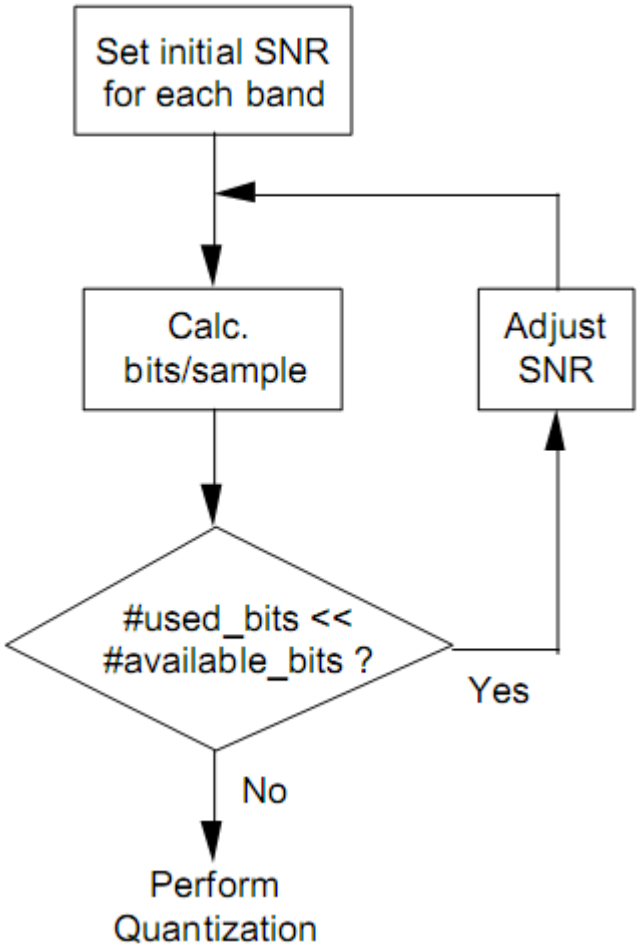

Noise allocation

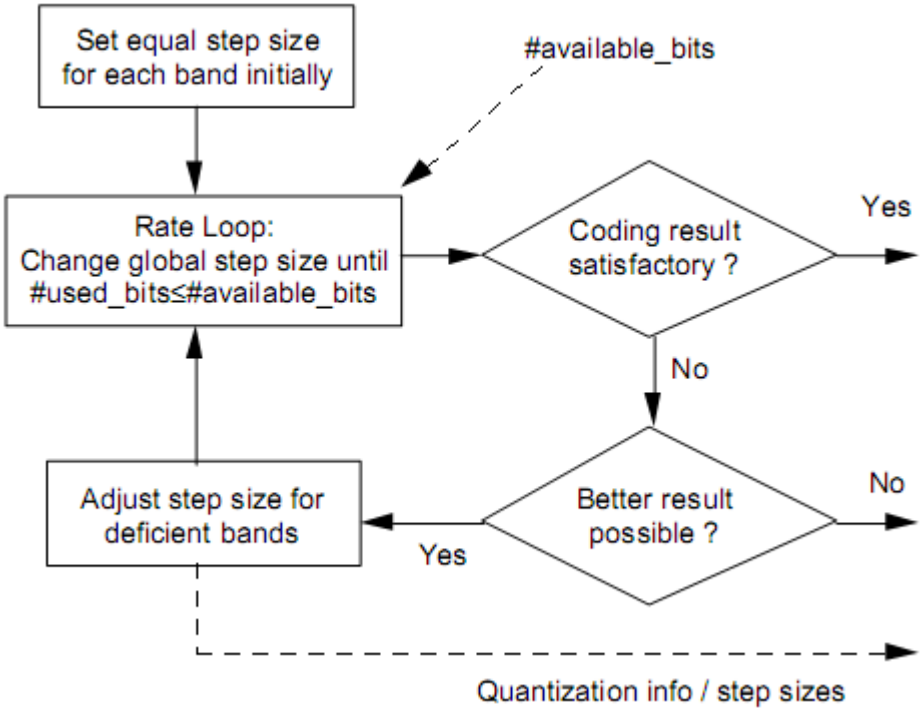

- **Entropy coding can be used**

Herre, Temporal Noise Shaping, Quantization and Coding Methods in Perceptual Audio Coding: A Tutorial Introduction. AES 17th Conf. 1999

Joint stereo coding

- **Motivation**
  - Reduction of the bitrate due to inter-aural redundancy/irrelevancy
  - In some cases independent coding of the individual channels leads to special artifacts
- **Stereo redundancy – irrelevancy**
  - There is not much correlation between the L and R time signals – for most signals
  - Power spectra of both channels are often highly correlated
  - Exact localization of audio sources decreases at high frequencies
- **Stereo unmasking effect – certain coding artifacts which are masked in single channel coding can become audible when presented as a stereo signal coded by a dual mono coding system.**
  - Binaural Masking Level Difference – esp. on low freq.
- **Precedence effect**
  - not the loudest but the first wavefront
  - Time relationship can be distorted by certain coding techniques

Kahrs, M, Brandenburg, K, Applications of Digital Signal Processing to Audio and Acoustics, Kluwer 1998

Conesquences to perceptual coders

- **ITD is less important at high frequencies**
  - “Intensity stereo coding” preserves only intensity information
- **Binaural masking level difference**
  - Decrease of masked threshold due to binaural hearing: up to 15 dB decrease.
  - Coding artifacts may be audible for stereo sounds
- **Summing of localization**
  - If the same sounds come from different position in space within 1 ms, they make a fused image localized as given by weighted sum of the sounds are perceived as fused
- **Precedence effect**
  - If the same sounds come with a delay between 1 and 5 ms, the first sound determines the localization.

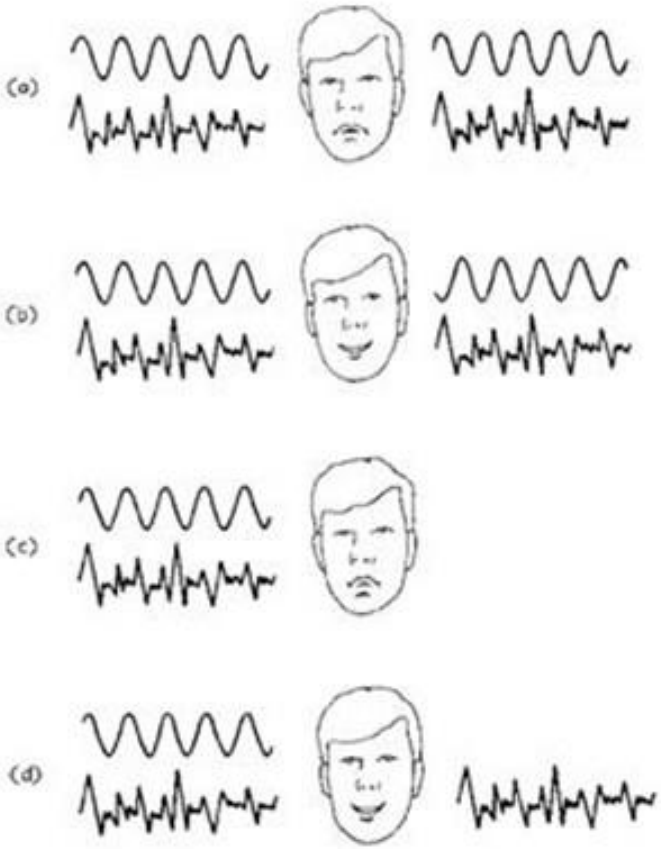

Joint stereo coding

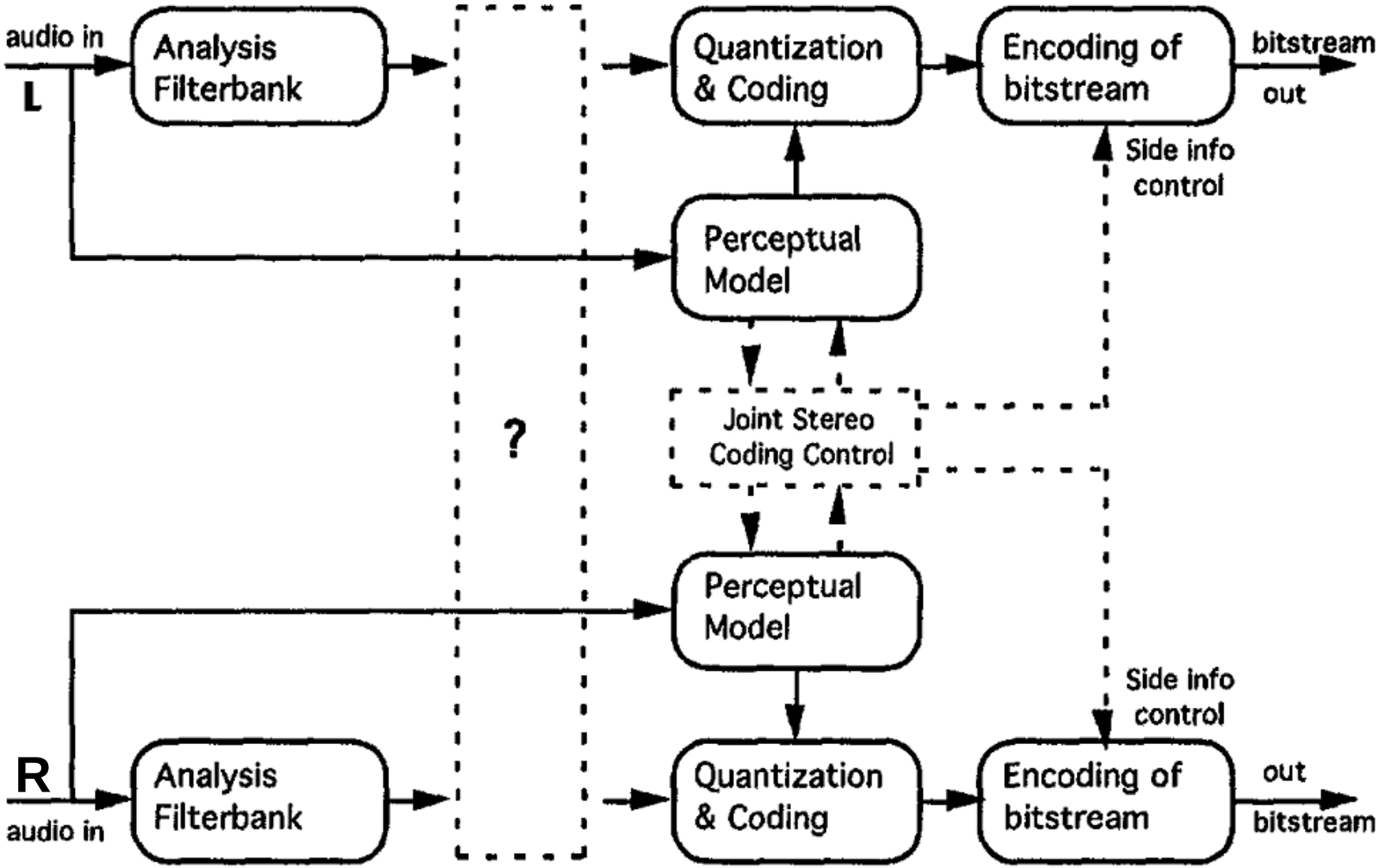

Stereo techniques

- **Localization**
  - Horizontal plane – ITD x ILD
  - Median plane? (head movements, color changes – pinna, shoulders)

Basic stereo microphone arrays:

X-Y:

X-Y: Mikes at 90° to 120°

ORTF:

ORTF: Mikes at 110° with 7” spacing of capsules

A-B:

A-B: Mikes aimed forward with distance of 18 to 24”

AKG microphones in the Home Studio, AKG inc.

Review

STEREO PICKUP SYSTEMS	MICROPHONE TYPES	MICROPHONE POSITIONS	
X-Y	2 - CARDIOID	AXES OF MAXIMUM RESPONSE AT 135° SPACING: COINCIDENT	
ORTF (FRENCH BROADCASTING ORGANIZATION)	2 - CARDIOID	AXES OF MAXIMUM RESPONSE AT 110° SPACING: NEAR-COINCIDENT (7 IN.)	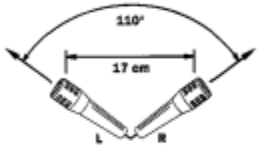
NOS (DUTCH BROADCASTING FOUNDATION)	2 - CARDIOID	AXES OF MAXIMUM RESPONSE AT 90° SPACING: NEAR-COINCIDENT (12 IN.)	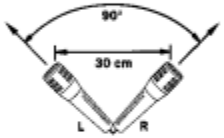
STEREOSONIC	2 - BIDIRECTIONAL	AXES OF MAXIMUM RESPONSE AT 90° SPACING: COINCIDENT	
MS (MID-SIDE)	1 - CARDIOID 1 - BIDIRECTIONAL	CARDIOID FORWARD-POINTED; BIDIRECTIONAL SIDE-POINTED; SPACING: COINCIDENT	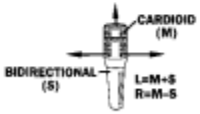
SPACED	2 - CARDIOID OR 2 - OMNIDIRECTIONAL	ANGLE AS DESIRED SPACING: 3-10 FT.	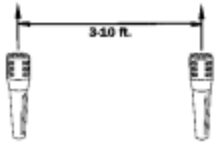

Boudreau et al., Microphone Techniques for Studio Recording, Shure Inc. 2004

Stereophony

- **Capture techniques**
  - Coincident
  - Spaced
  - Near coincident
- **Listener on axis**
- **Coding**
  - Lossless
  - Dual mono – problems with the stereo unmasking effects
  - Joint stereo
    - M/S stereo coding
    - Intensity stereo coding

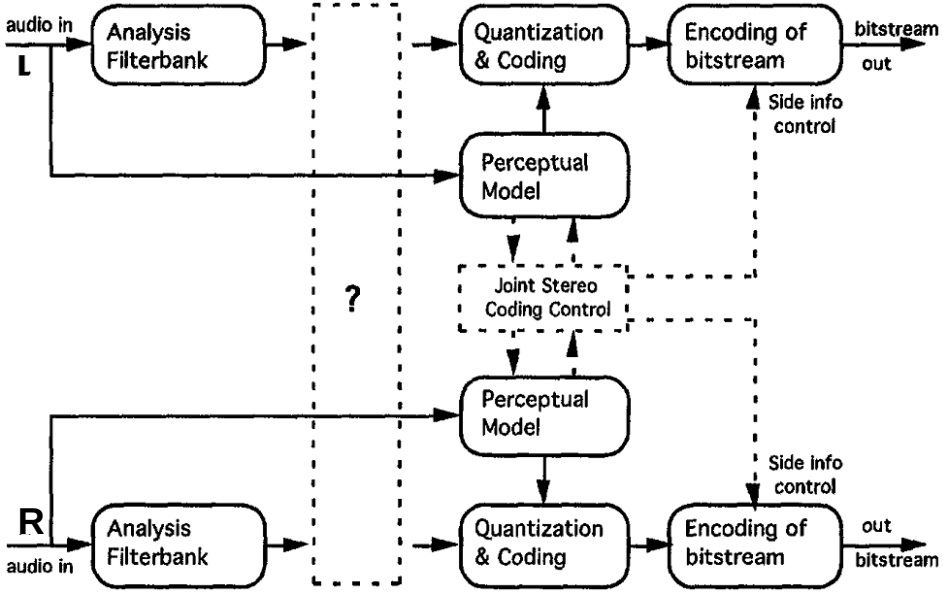

M/S stereo coding

- **Matrixing in the coder - similar to the technique used in FM stereo transmission**
  - M= c L + c R
  - S= c L – c R
- **Dematrixing in the decoder**
  - L= c M + c S
  - R= c M – c S

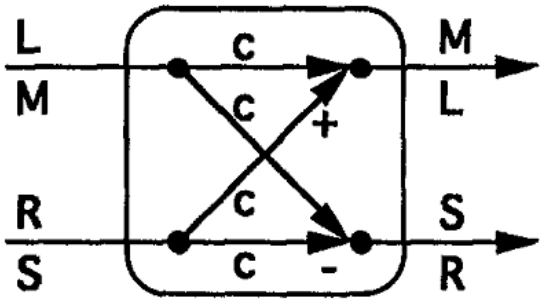

$c = 1 / \sqrt{2}$

- **Emphasis on redundancy removal – prevention of the stereo unmasking effects**
- **Perfect reconstruction – lossless**
- **Saving depends on the input signal – up to 50% for L=R**
- **Useful for the whole spectral range – preserves the full spatial information**

Kahrs, M, Brandenburg, K, Applications of Digital Signal Processing to Audio and Acoustics, Kluwer 1998

Intensity stereo coding

- **Intensity stereo coding/dynamic crosstalk/channel coupling**
- **Perception of high frequency components relies on their energy-time envelopes (level)**
  - A single set of spectral values
  - Scaling/angle data for each band

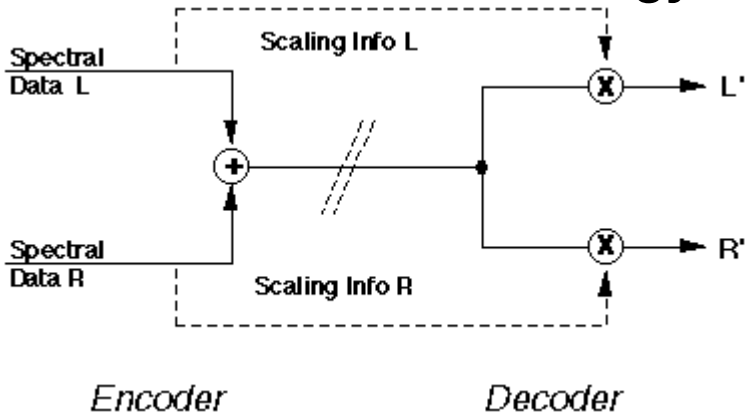

- **Emphasis on irrelevancy reduction – high frequencies**
- **Not perfect reconstruction – a loss of spatial information (less annoying than other coding artifacts)**
- **Saving of 50% of the sample data – saving of about 20% of the net bit-rate, maximum saving at about 40%**
- **Useful only for the high frequency range – used for part of the spectrum**

Kahrs, M, Brandenburg, K, Applications of Digital Signal Processing to Audio and Acoustics, Kluwer 1998

Pre-echo

- **Result of a block-based processing**
- **Solution**
  - adaptive block switching
  - TNS

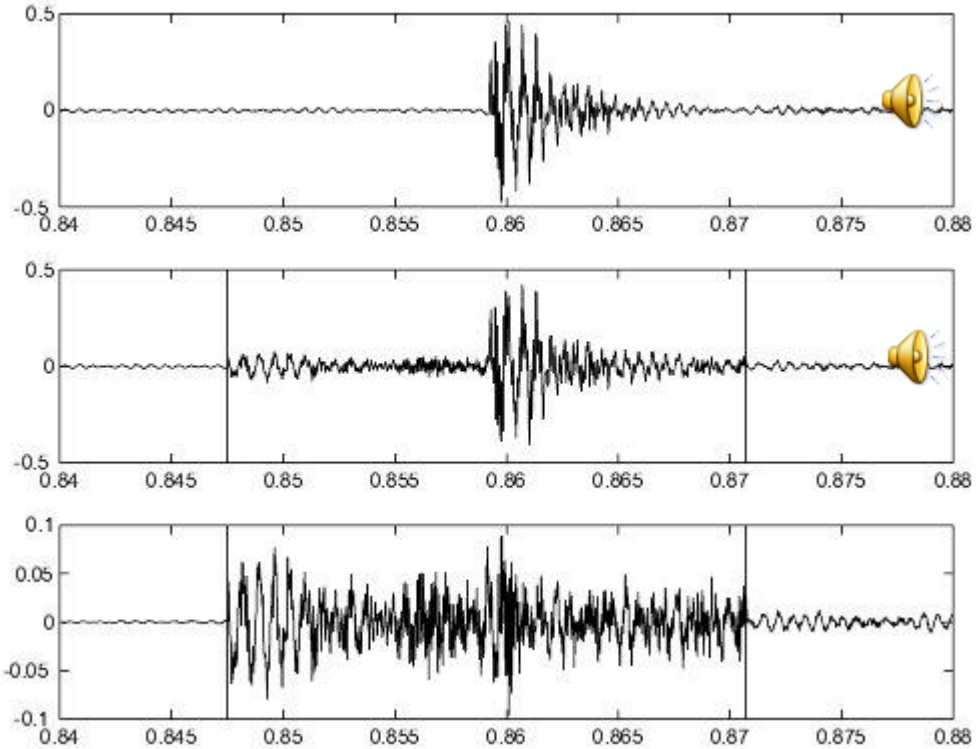

Aliasing

- **principle**

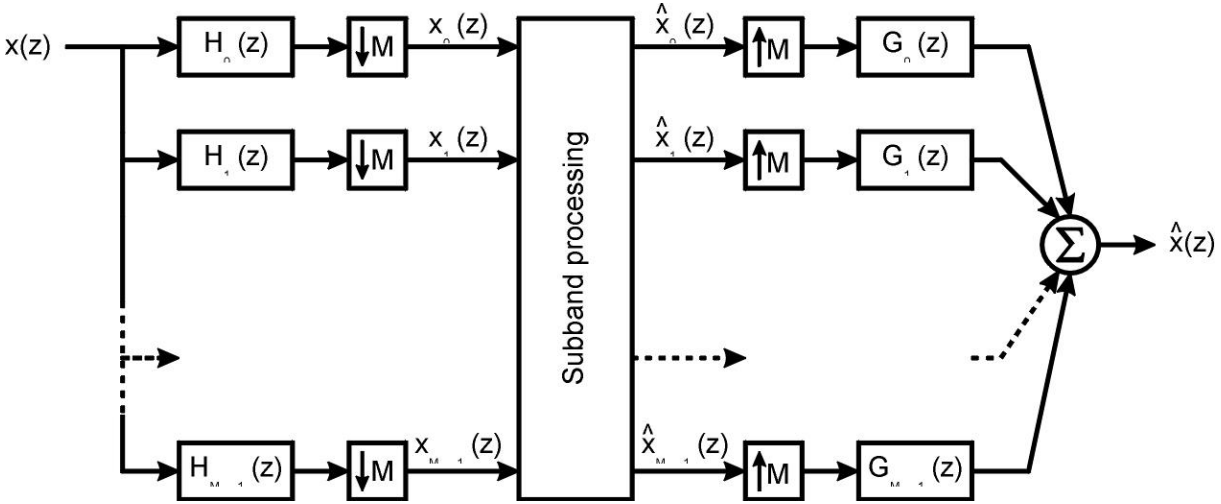

- **Result of a subband coding**
- **Wavelet filter bank**

Birdies/Band Limitation

- **Psychoacoustic (perceptual) model**
  - Based on the Auditory Interface (the ear)
  - High-level procceses (brain) – auditory objects, streams

- **Block-based processing**
  - Block by block differences

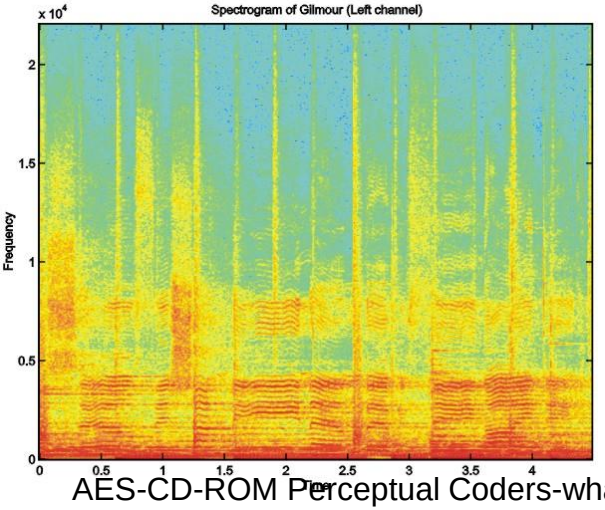

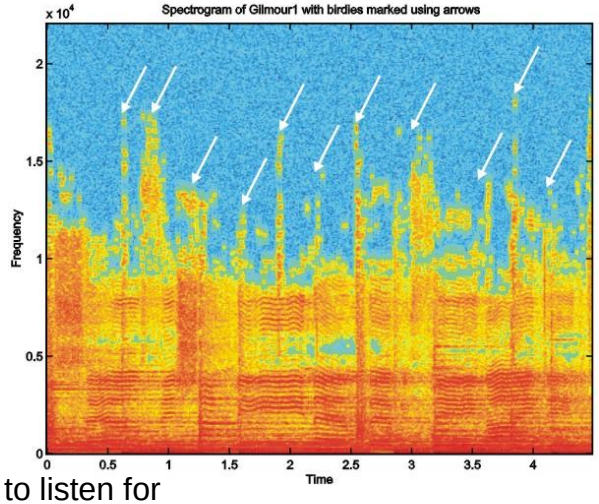

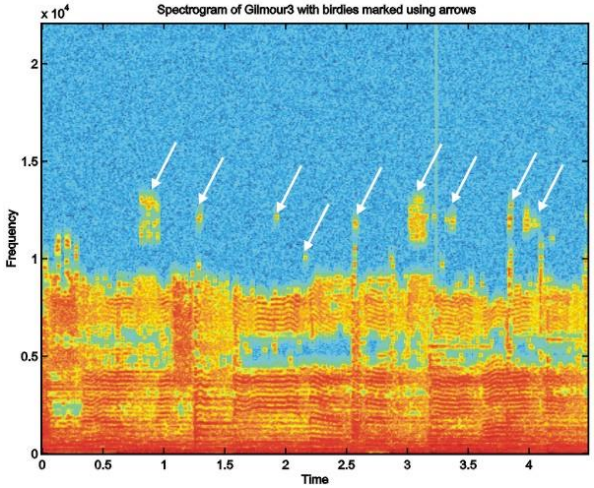

Speech Reverberation

- **Uncertainty principle – frequency x time resolution**
- **Preecho – impulse signals, reveberation – speech**

BMLD

- **Binaural Masking Level Difference**
- **Change in the phase can cause „new“ object**

Stereo Imaging

- **Result of the Joint Stereo technique**

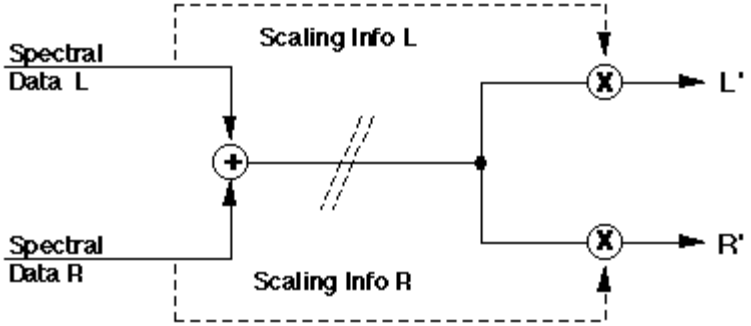

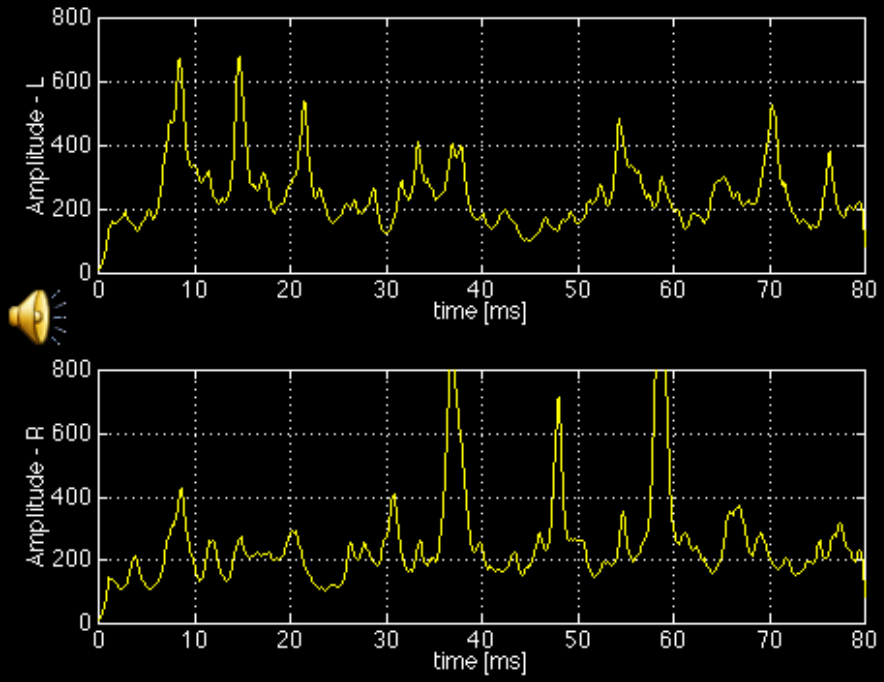

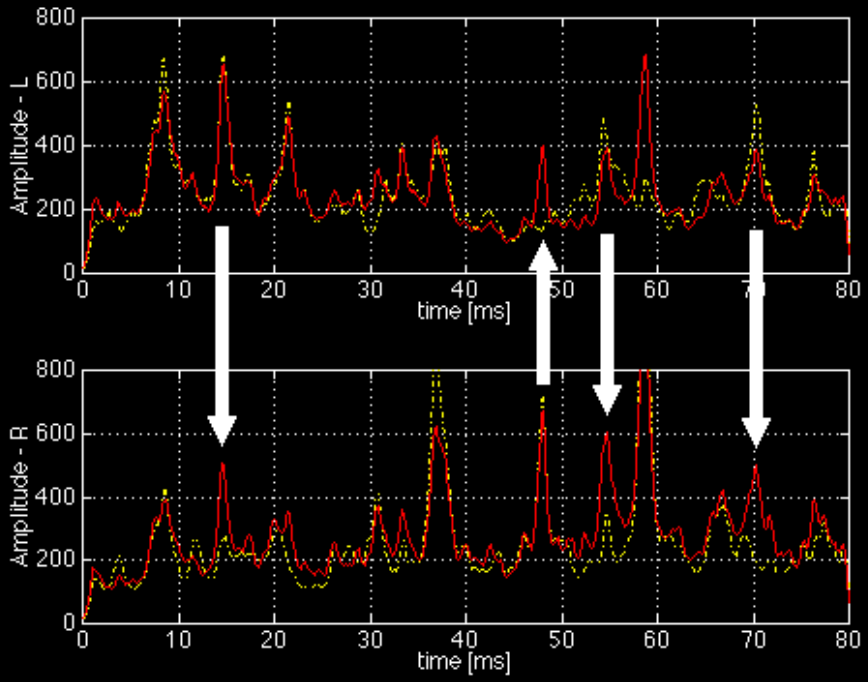

Tandem Coding

- **Processing with the PCM**

QUESTIONS?

Exam questions

- **List and comment on the basic requirements to be considered when selecting the appropriate audio codec for given purpose.**
- **Draw the general structure of the lossy audio encoder and describe the basic and auxiliary blocks.**
- **What is the purpose of the filter bank and what are the two basic ways of its implementation? Why is it possible to sub-sample the signal in individual bands at a filter bank? What does the concept of critical sampling mean in this context?**
- **Describe the selected filter bank, its properties and utilization.**
- **Describe the compression artifact "preecho" - how it manifests and why it occurs. What are the ways of suppressing it?**
- **Describe the basic and other functions of the psychoacoustic model. Describe in detail the algorithm of the selected psychoacoustic model.**
- **Explain the abbreviations SNR, NMR and SMR and describe the meaning of these parameters for bit allocation and quantization.**
- **Describe the basic approaches of quantization control mechanism for fixed and variable bit streams. How does quantization control influence the use of lossless compression of lossy compressed data? What is a bit reservoir?**
- **Explain the Bit allocation techniques and noise allocation approaches - what is the difference between them and for which cases are the particular methods suitable?**
- **Discuss issues of multichannel sound compression. For what reasons it is not suitable the independent lossy compression of individual channels?**
- **Describe the use of the MS method for stereo / multichannel audio encoding. What is the principle of this method, what are its limitations, advantages, disadvantages?**
- **Describe how to use the intensity stereo for stereo/multichannel audio encoding. What is the principle of this method, what are its limitations, advantages, disadvantages?**
- ***Example: Critical sampling in filter bank, psychoacoustic model, SNR/SMR/NMR calculation***