Multimedia Technology Group

Audio coding standards

František Rund

xrund@fel.cvut.cz

Czech Technical University in Prague
Faculty of Electrical Engineering
Department of Radioelectronics

Technická 2
166 27 Prague 6

Department of
Radioelectronics
K13137

B2M37KAS

- **Project topics**
  - List
  - Contact a teacher for own topic
- **Seminar – consultation**
  - *Compression artifacts* - *https://www.audiolabs-erlangen.de/content/resources/aesCodingTutorial/index.html*
  - Consultation
  - Finishing tasks
  - Image lossless compression chalenge

Contents

- **Lossless compression standards**
  - Lossless audio compression
  - MPEG4 ALS
  - FLAC
- **Lossy compression standards**
  - ATRAC
  - MPEG 1 (MP3), MPEG 2 (AAC), MPEG 4 (AAC), MPEG D (USAC)
  - Ogg Vorbis
  - Opus
  - Dolby AC3
- **Multichannel audio coding**
  - Dolby AC3
  - MPEG-4 content coding
  - MPEG-D surround
  - MPEG-H 3D Audio
  - DirAC

Lossless audio coding

- **„Mathematical“ compression, decreasing of the redundancy**
- **Decoded signal is identical to the original**
- **Ideal for signals intended for further processing**
- **Methods**
  - RLE (Run Length encoding) – for signals with repeated states
  - Dictionary
    - LZW (Lempel-Ziv Welch) - gif, zip
  - Entropic – probability of symbol occurrence
    - Huffman
    - Colomb-Rice
  - Vector quantization
  - Difference methods
  - Predictive methods
  - …
- **Audio?**

Lossless compression - audio

- **Lossless methods like LZW, Huffman, etc. not very effective for audio due to**
  - Long-time correlations
  - High range of values
- **Two – stage processing**

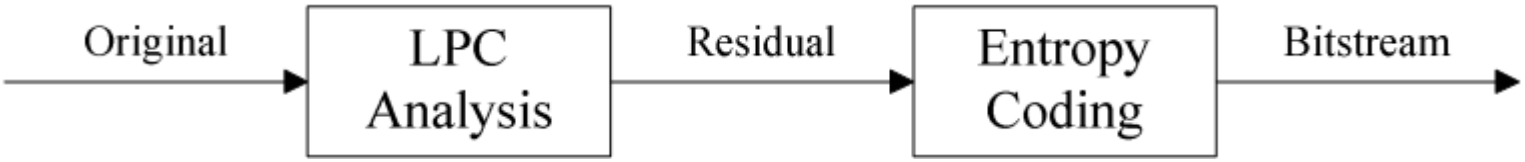

  - Decorrelation stage
    - E.g. Linear prediction
    - Residual – difference between original and predicted
  - Lossless coding
    - E.g. Rice Codes (spec. case of Huffman. cod.)

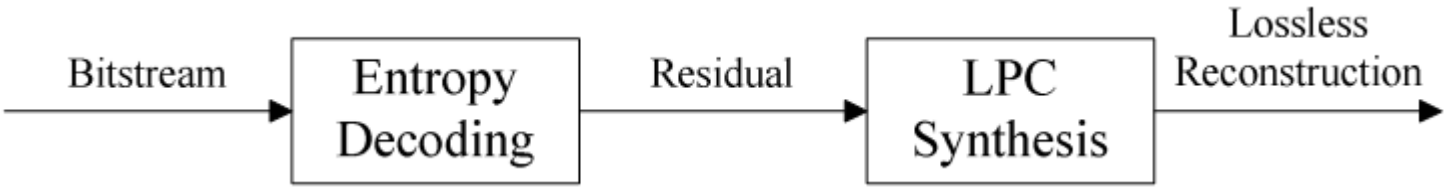

example: MPEG4 Audio Lossless coding (ALS)

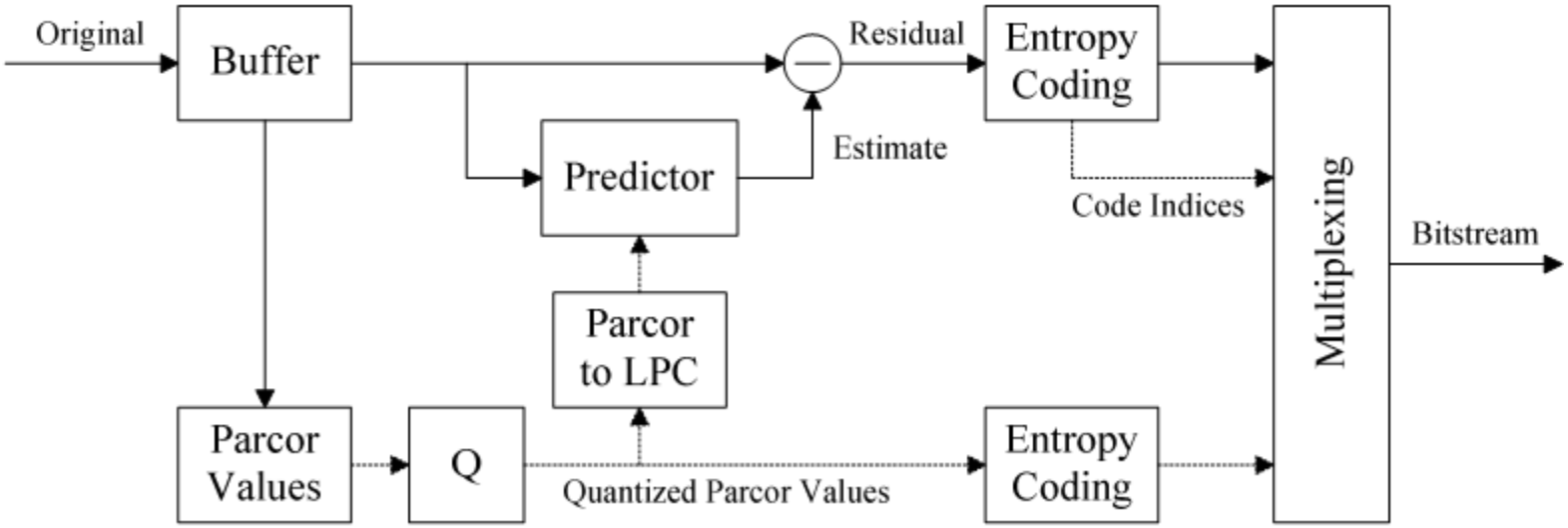

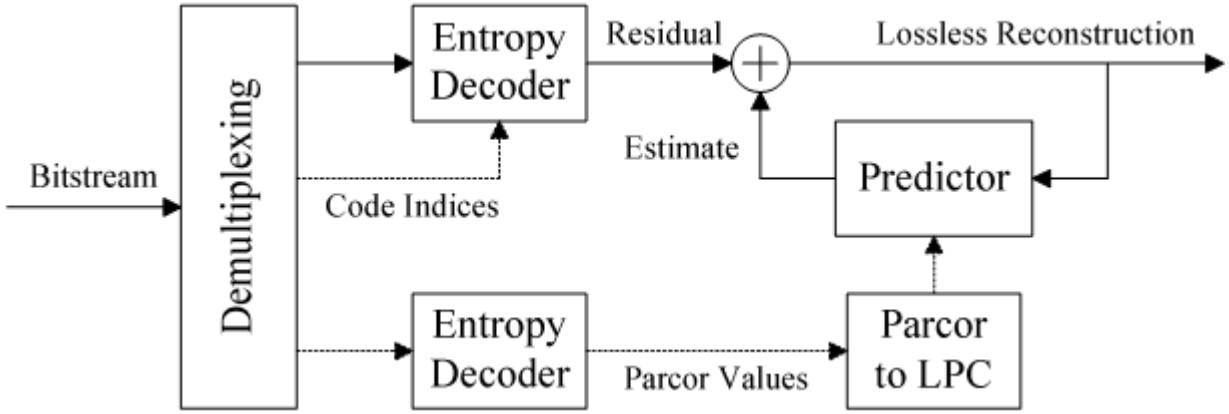

Example: FLAC

- **Simple model (approximation) to save data**
  - Fitting a simple polynomial to the signal
    - Fast but less accurate (than LPC).
    - 3 bits
  - LPC (linear predictive coding)
    - The higher model order – the higher accuracy – the slower
    - Number of bits depends on sample rate and LPC order
- **Residuum = difference between original and model**
- **Error signal – Laplacian distribution**
- **Rice coding – to efficiently encode these kind of signals quickly and without needing a dictionary.**

- **CRC, MD5**

Audio Format	FLAC (open source)	MPEG-4 ALS (TU Berlin)
48 kHz / 16-bit	2.06	2.24
48 kHz / 24-bit	1.46	1.59
96 kHz / 24-bit	1.76	2.16
192 kHz / 24-bit	-	2.66

Noll, Liebchen - Lossless and Perceptual Coding of digital audio, http://flac.sourceforge.net/documentation_format_overview.html

Lossless formats comparison

Compressor	Options	Ratio	Encoding Speed	Decoding Speed
		%	x realtime	x realtime
La 0.4b	default	55.5	2.1	2.7
OptimFROG 4.509	highnew	55.8	1.1	1.5
Monkey's Audio 3.99	extra high	56.4	8.8	8.7
OptimFROG 4.509	default	56.7	6.0	8.9
Monkey's Audio 3.99	high	56.9	15.8	14.3
Monkey's Audio 3.99	normal	57.3	18.1	16.0
WavPack 4.0	high	58.0	16.0	16.1
WMA 9	default	58.0	9.4	10.8
RKAU 1.07	fast (l1)	58.4	8.0	9.6
LPAC Archiver 1.41	medium, JS, random access	58.8	13.5	24.6
LPAC Archiver 1.41	extra high, JS, random access	58.8	8.1	20.2
TTA 3.2	default	59.0	26.6	23.4
WavPack 4.0	normal	59.4	26.3	28.4
FLAC 1.1.2	8	59.6	4.2	44.7
FLAC 1.1.2	default (5)	59.8	19.9	44.7
Apple Lossless (iTunes 4.7)	automatic	60.0	15.6	35.0
Shorten 3.6.0	default	63.7	33.7	70.9

http://members.home.nl/w.speek/comparison.htm

Perceptual (lossy) coding

„The basic idea about perceptual coding of high quality digital audio signals is to hide the quantization noise below the signal dependent thresholds of hearing“ **K. Brandenburg, Perceptual coding of high quality digital audio**

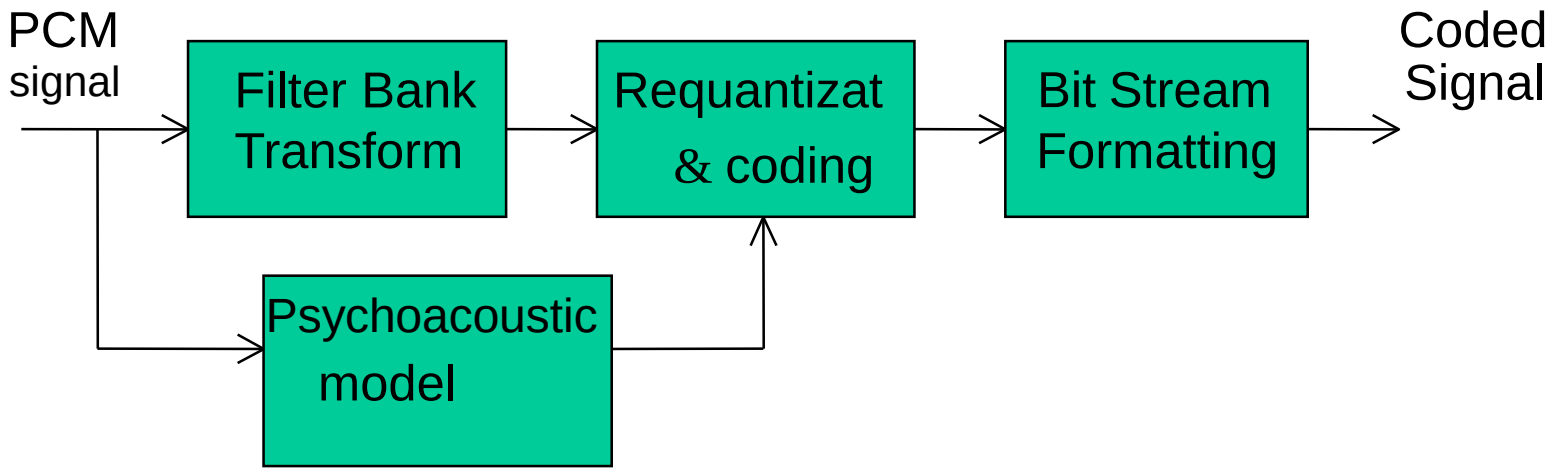

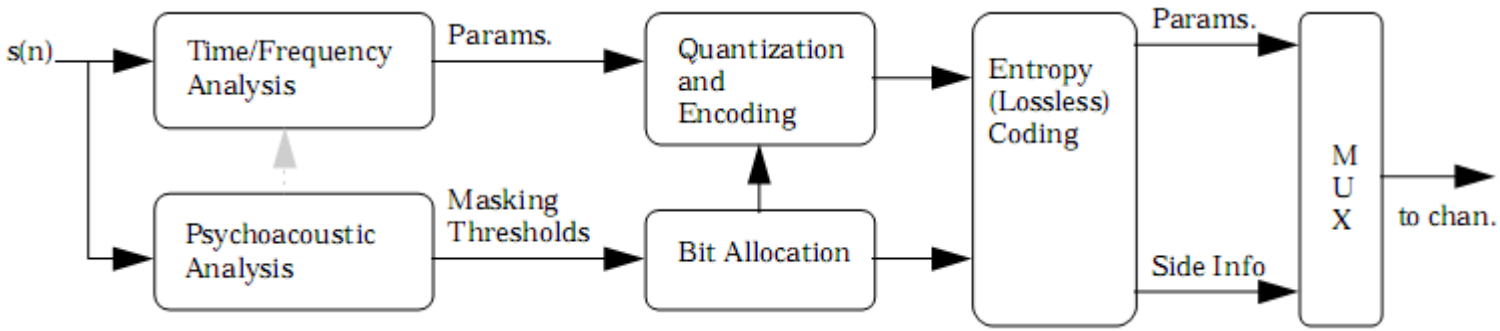

Kahrs, M, Brandenburg, K, Applications of Digital Signal Processing to Audio and Acoustics, Kluwer 1998,

Adaptive Transform Acoustic Coding (MD)

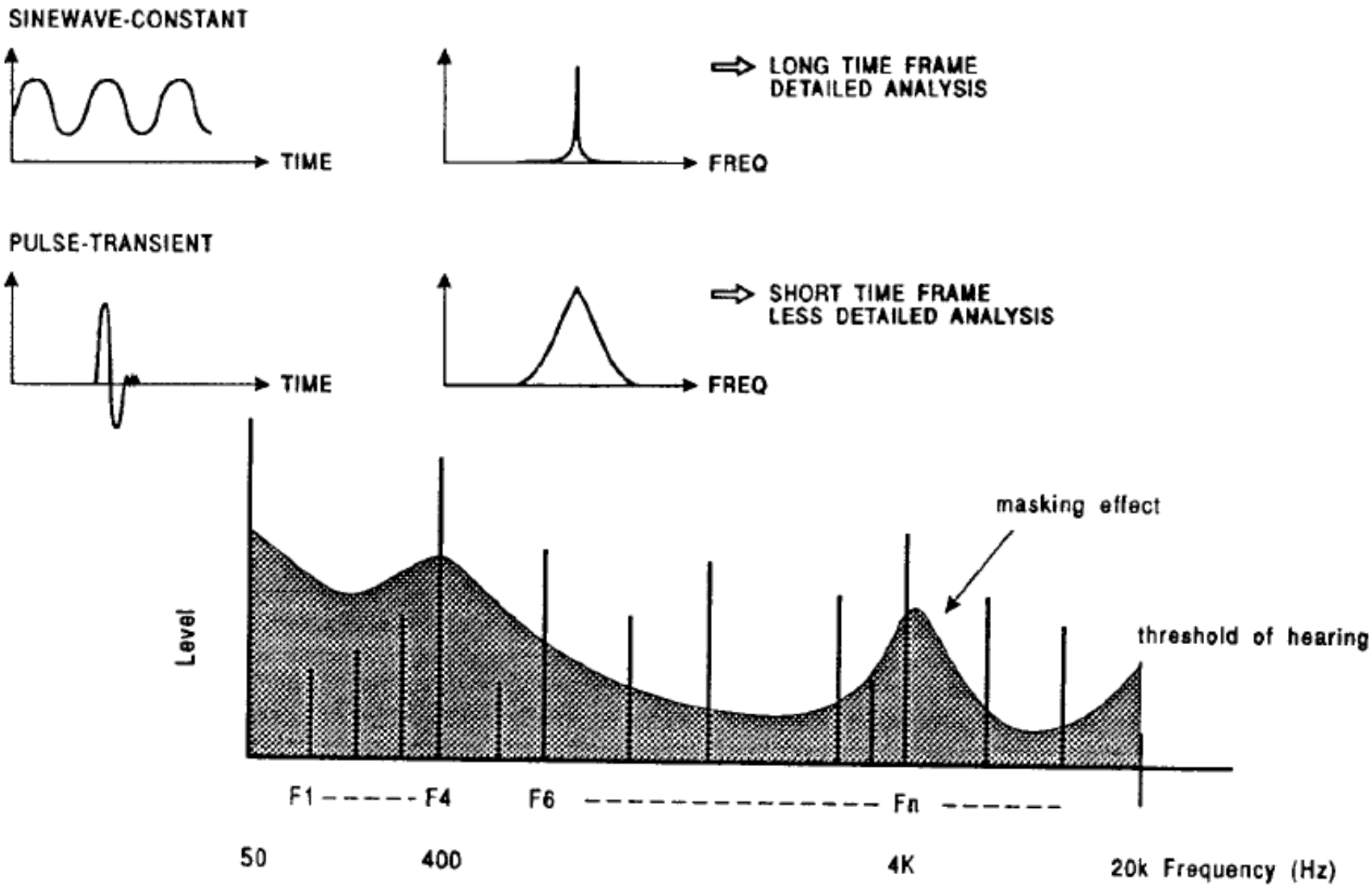

http://www.minidisc.org/aes_atrac.html

ATRAC (MD, SDDS)

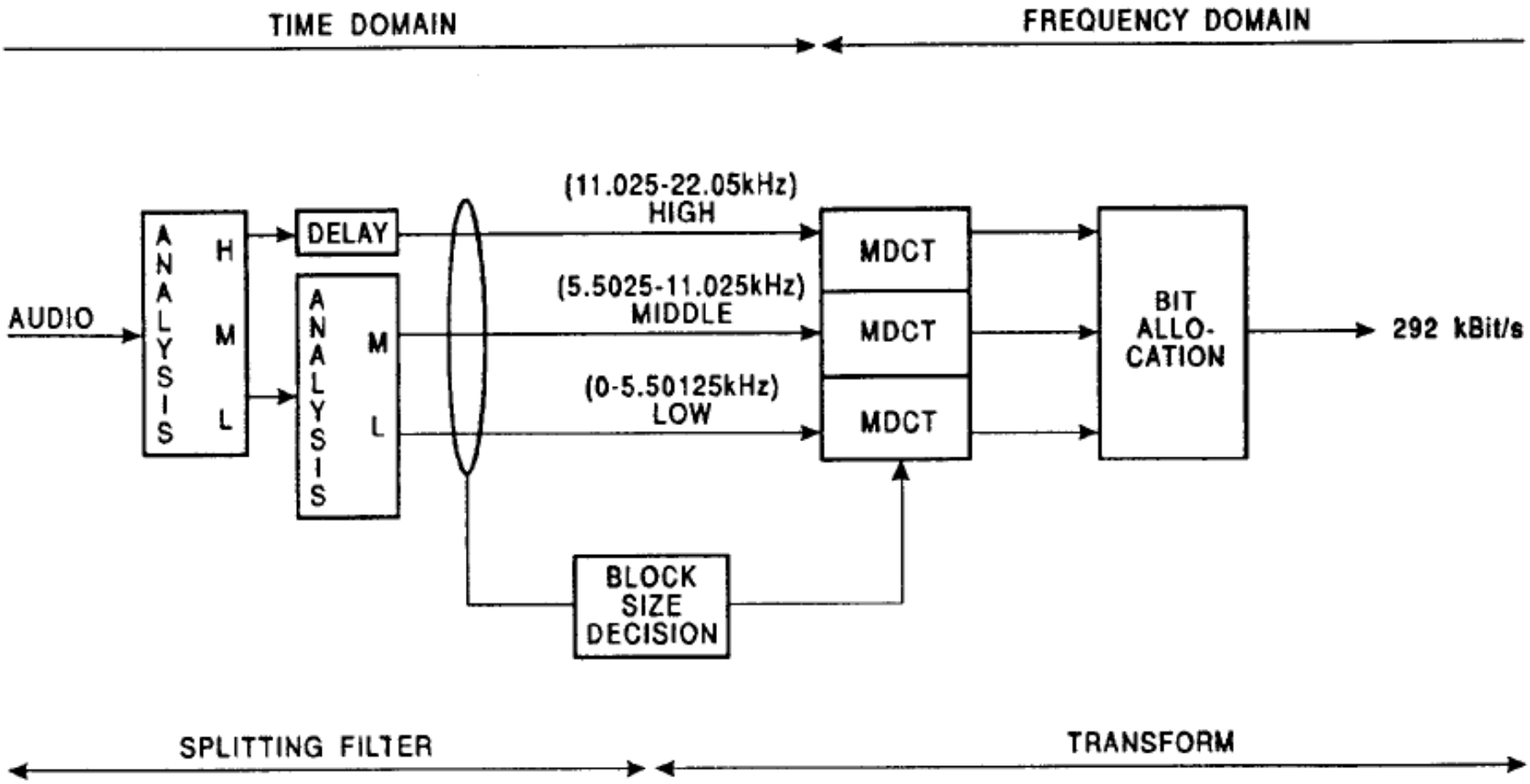

http://www.minidisc.org/aes_atrac.html

ATRAC (MD, SDDS)

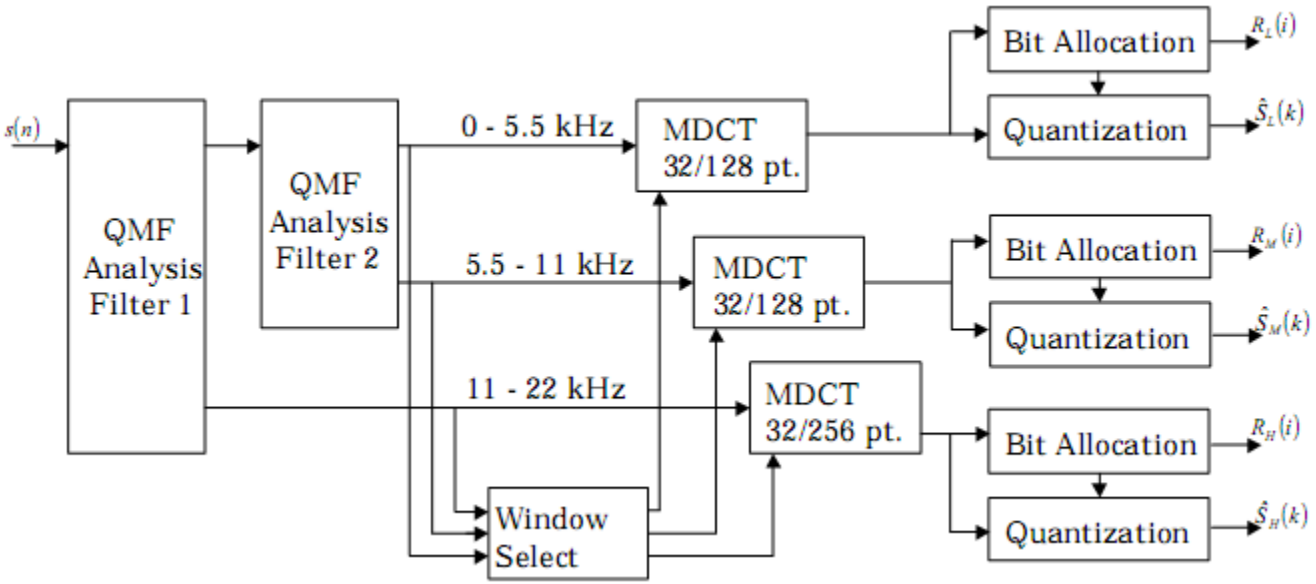

MPEG

MPEG = Motion Picture Experts Group

MPEG is a family of encoding standards for digital multimedia information

- MPEG-1: a standard for storage and retrieval of moving pictures and audio on storage media (e.g., CD-ROM).
    - Layer I
    - Layer II
    - Layer III (aka MP3)
- MPEG-2: standard for digital television, including high-definition television (HDTV), and for addressing multimedia applications.
    - Advanced Audio Coding (AAC)
- MPEG-4: a standard for multimedia applications, with very low bit-rate audio-visual compression for those channels with very limited bandwidths (e.g., wireless channels).
- MPEG-7: a content representation standard for information search

MPEG 1, layer 1

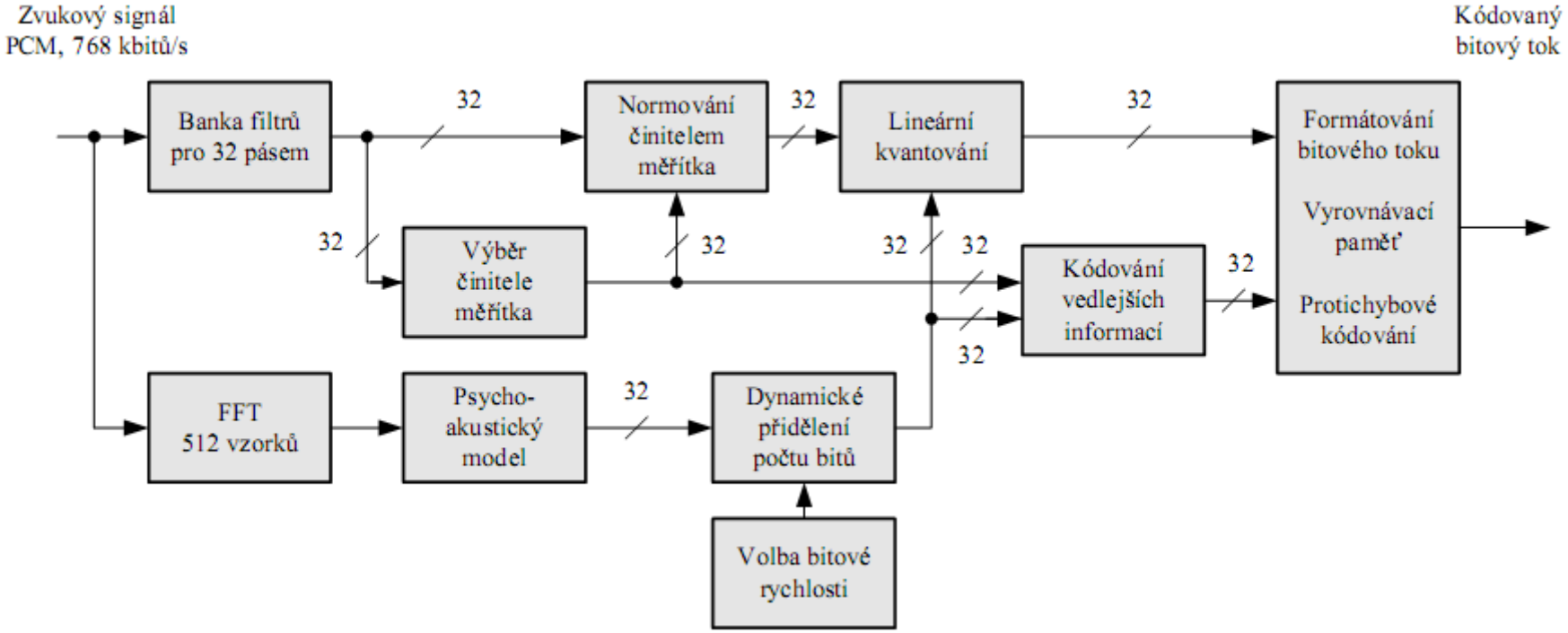

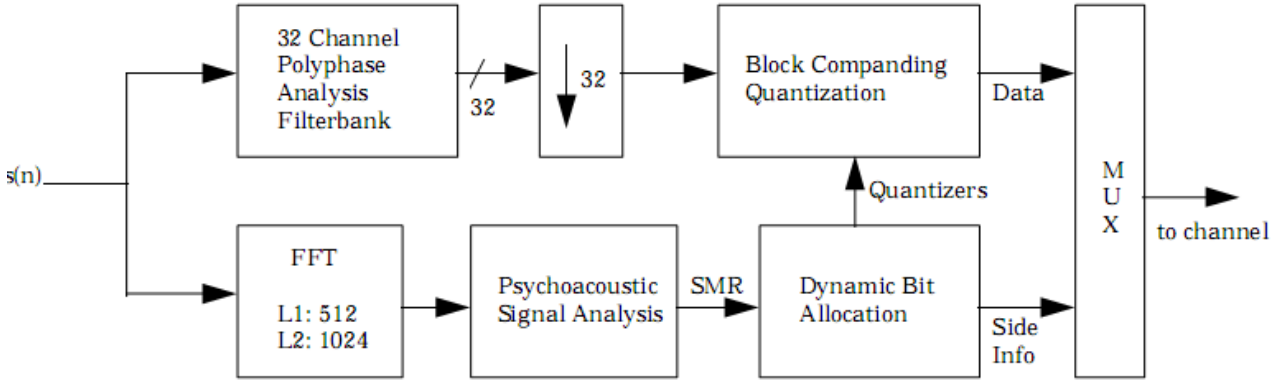

MPEG 1, layer 2

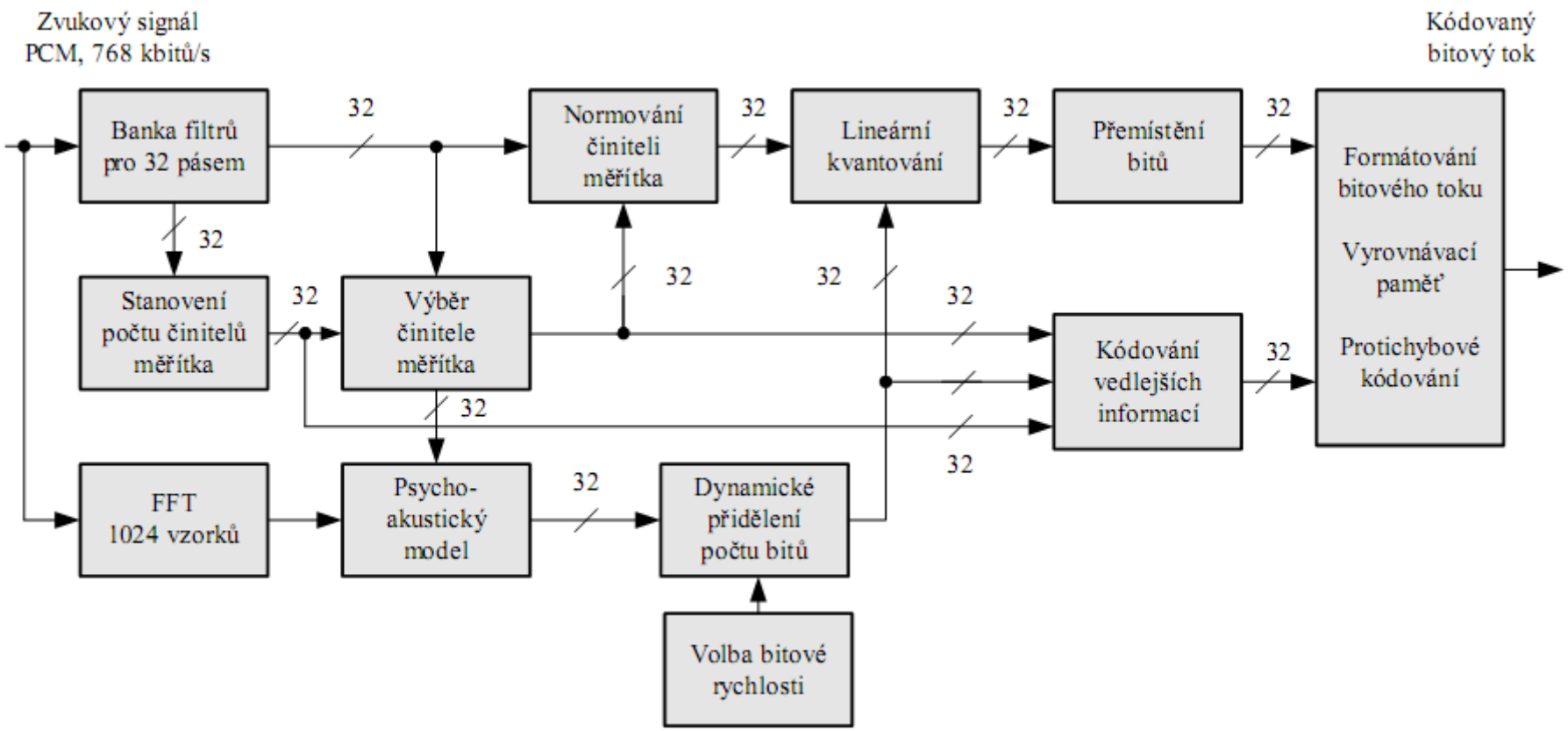

MPEG 1, layer 3 (MP3)

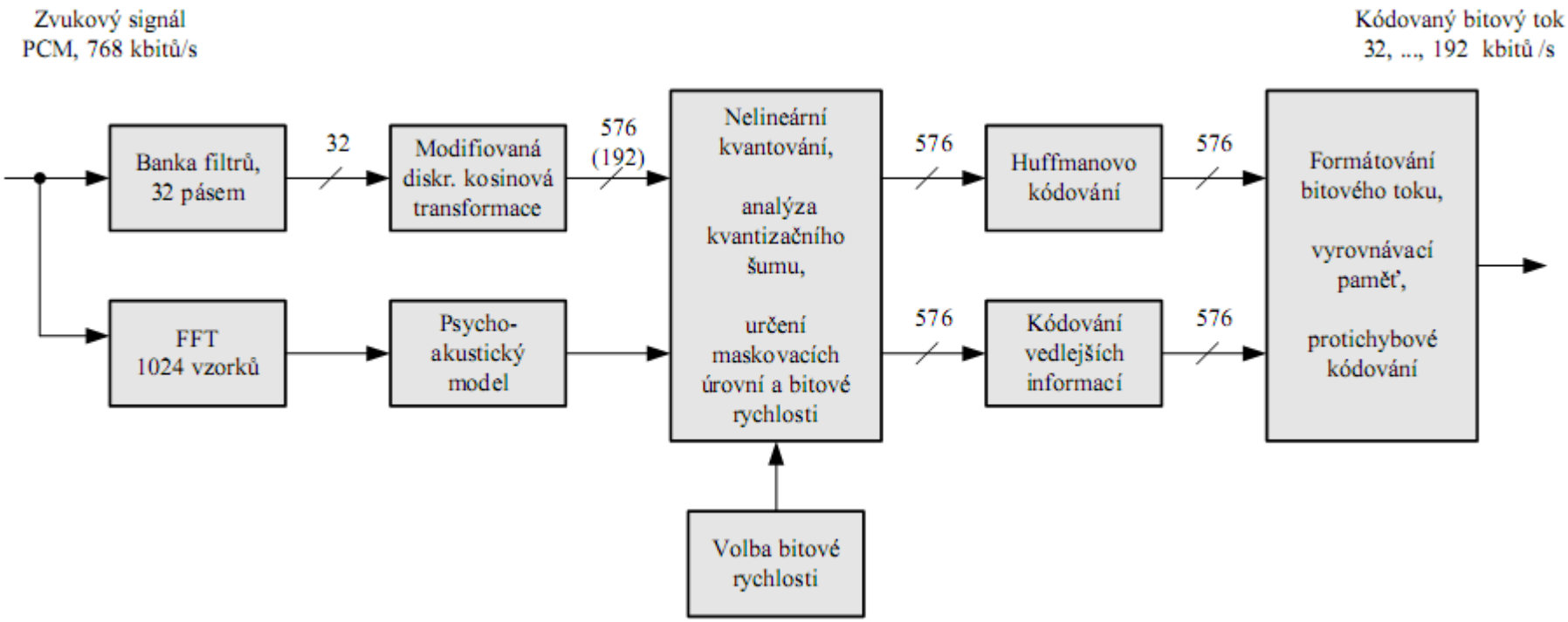

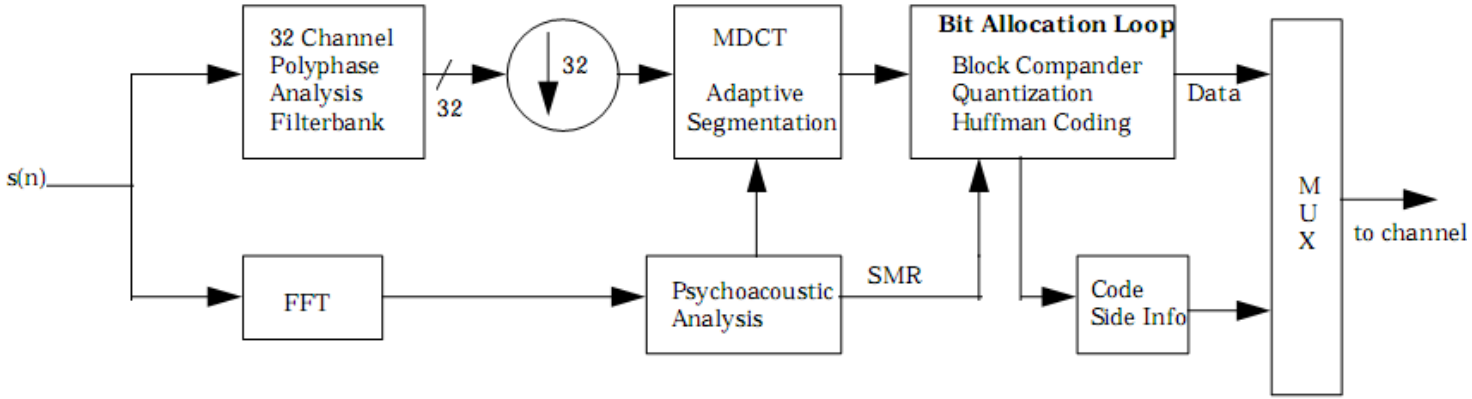

Kadlec, F. Zpracování akustických signálů. ČVUT 2002

Painter, Spanias - Perceptual Coding of Digital Audio

MPEG1, layer 3 (MP3)

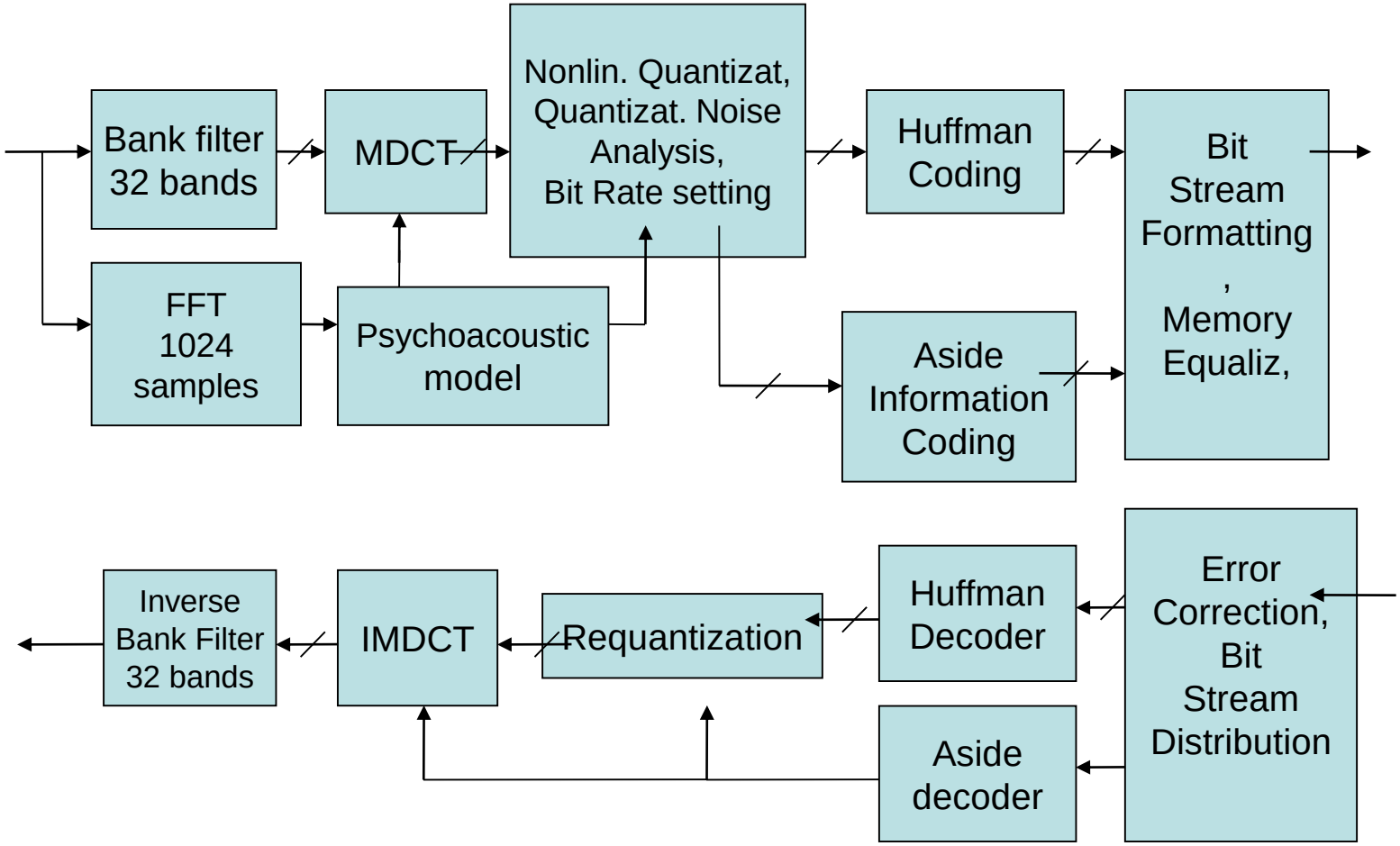

MPEG1 decoders

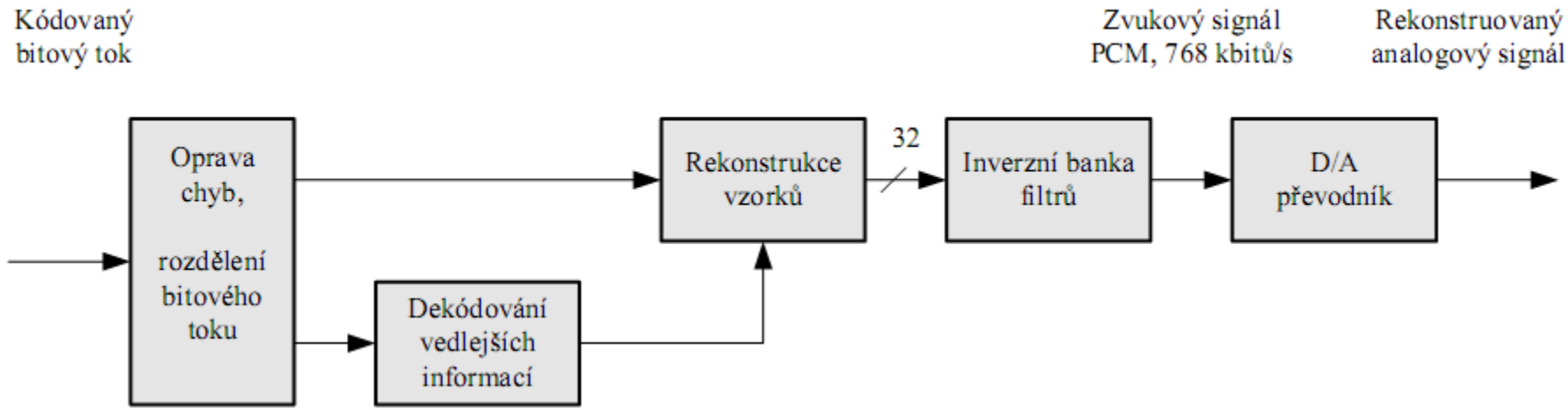

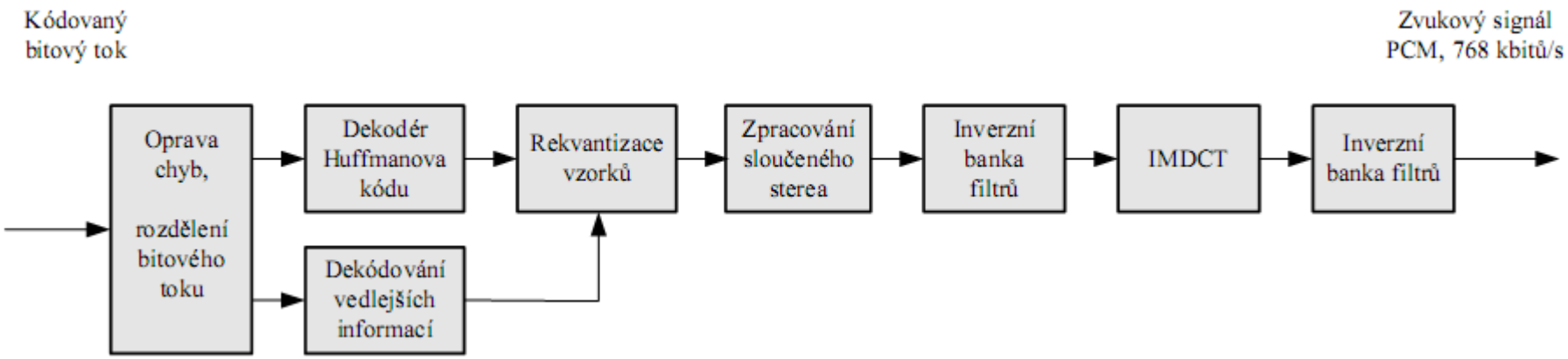

MPEG2 Backward Compatibile

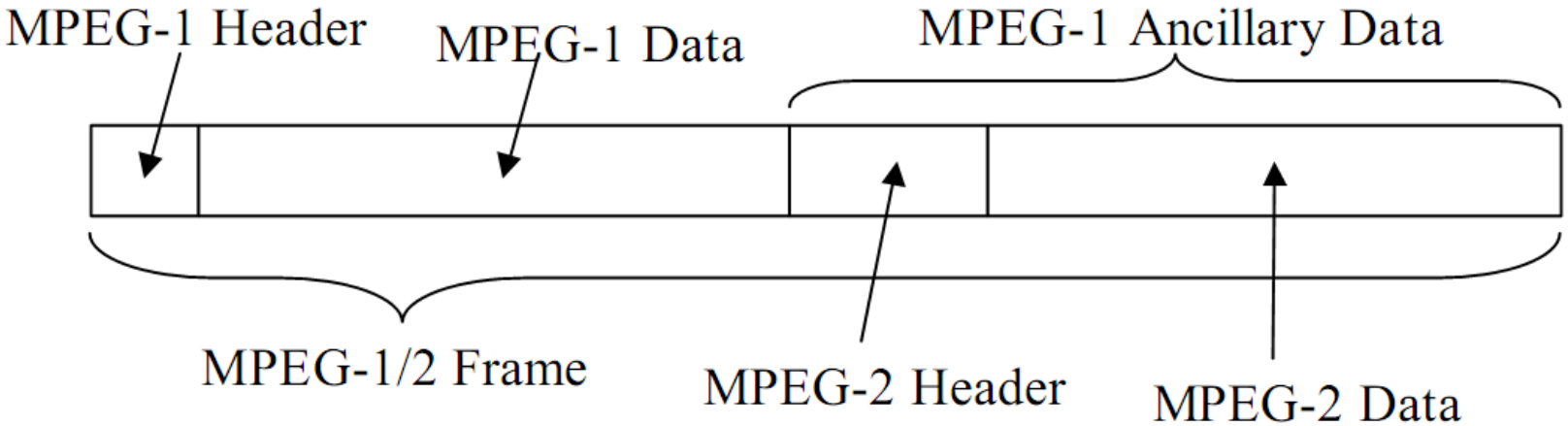

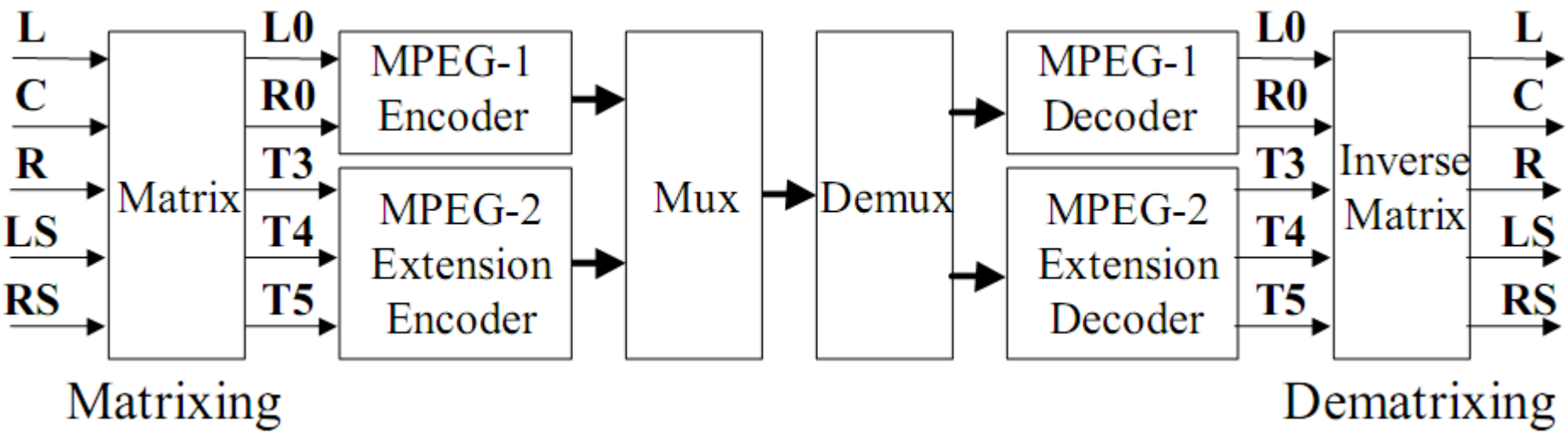

$$\begin{cases} L0 = \alpha(L + \beta \cdot C + \delta \cdot LS) \\ R0 = \alpha(R + \beta \cdot C + \delta \cdot RS) \end{cases} \quad \alpha = \frac{1}{1+\sqrt{2}}; \beta = \delta = \frac{1}{\sqrt{2}} \text{ or } \alpha = 1; \beta = \delta = 0$$

MPEG2 Non Backward Compatibile/Advanced Audio Coding

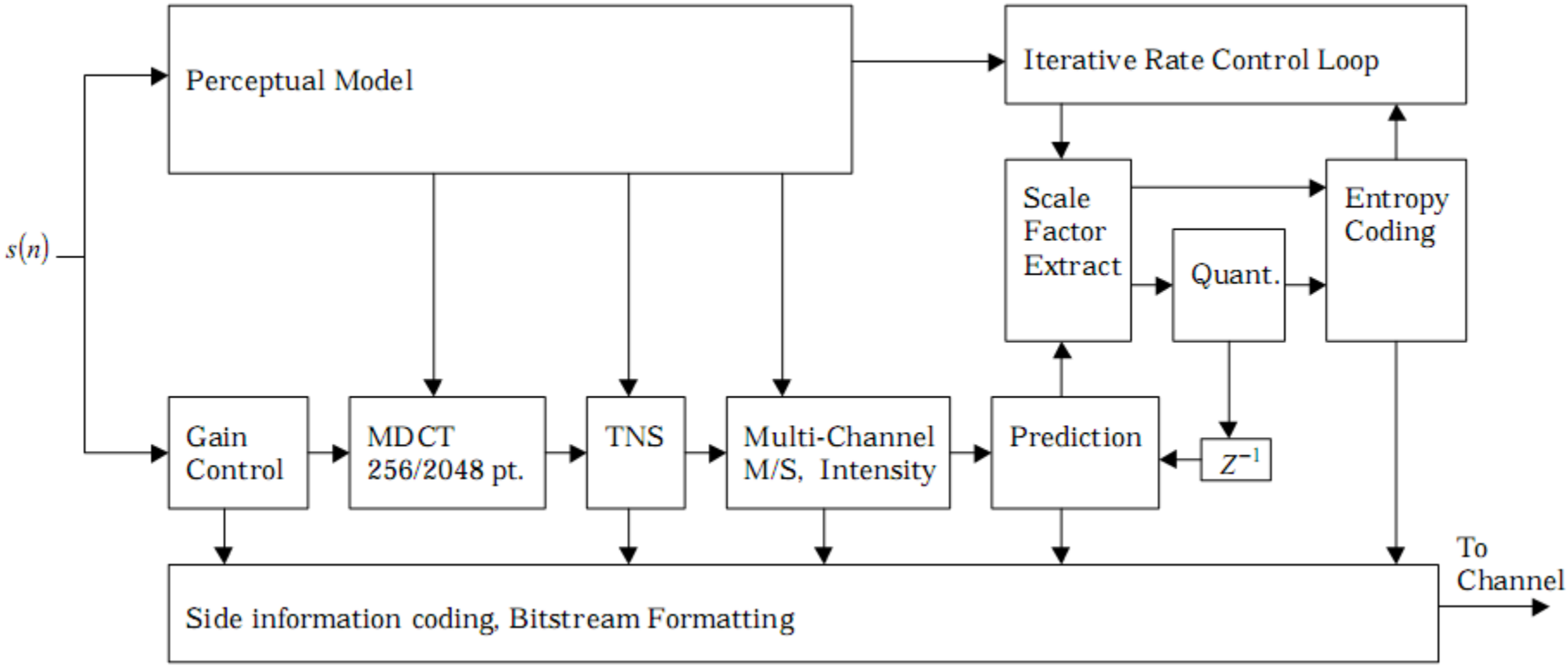

- **Window shape adaptation**
- **Spectral coefficient prediction**
- **TNS**
- **Bandwidth/bitrate scalable operation**

MPEG2 AAC

- **Filterbank**
  - MDCT filterbank (adaptive resolution)
  - 2048/256 points stationary/transient
  - Window shape adaptation
- **Spectral prediction – long windows**
- **Bit allocation**
- **Noiseless coding – maximize redundancy reduction**
- **Temporal Noise Shaping – preecho control**
- **Sample-rate scalability**
- **…**
- **Reference Model approach – only the interface is defined, parts of the encoder can be changed/improved**
- **MPEG4 AAC RM – e.g. Perceptual Noise Substitution - parametric**

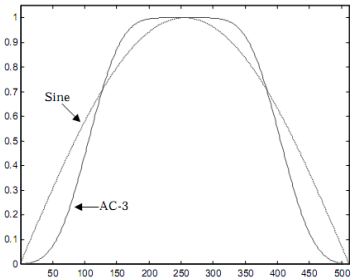

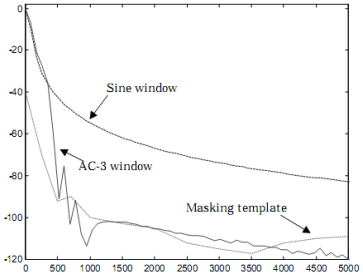

MPEG2 AAC

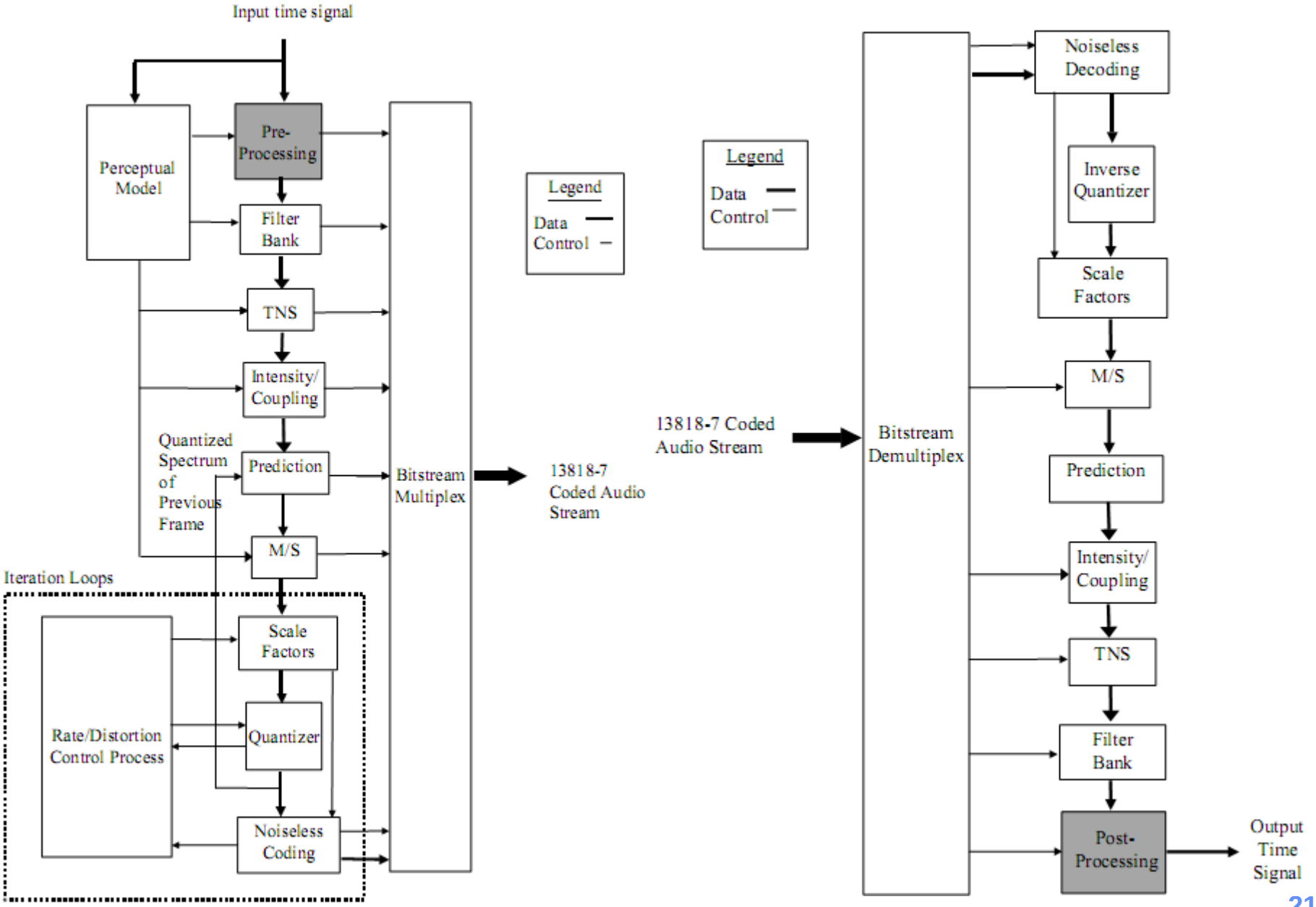
Input time signal
Perceptual Model
Pre-Processing
Filter Bank
TNS
Intensity/ Coupling
Quantized Spectrum of Previous Frame
Prediction
M/S
Iteration Loops
Scale Factors
Rate/Distortion Control Process
Quantizer
Noiseless Coding
Bitstream Multiplex
Legend
Data
Control
13818-7 Coded Audio Stream
Legend
Data
Control
13818-7 Coded Audio Stream
Bitstream Demultiplex
Noiseless Decoding
Inverse Quantizer
Scale Factors
M/S
Prediction
Intensity/ Coupling
TNS
Filter Bank
Post-Processing
Output Time Signal

MPEG1 and 2 filterbanks

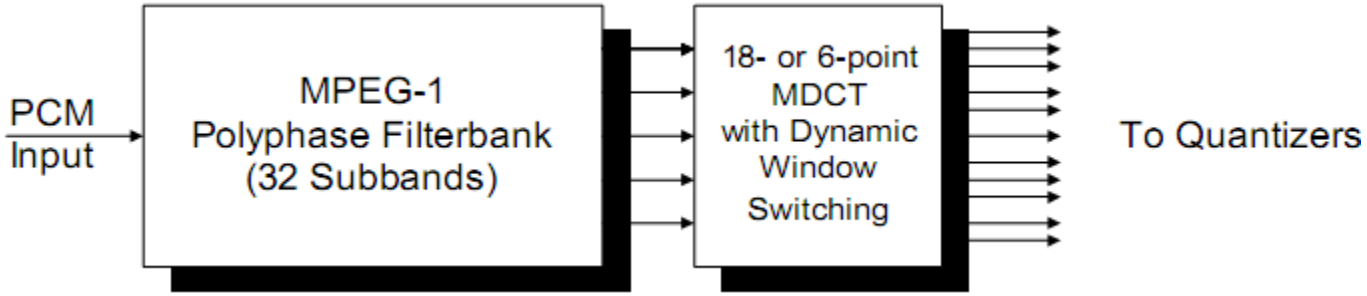

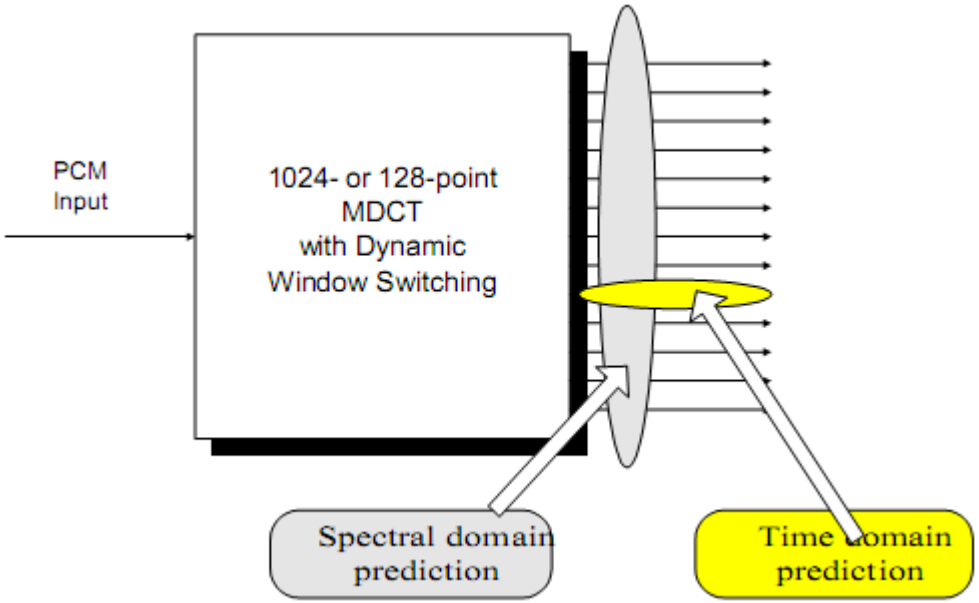

MPEG4

- **A universal framework**
  - Extensive scalability, object-based representations, interactivity …
- **Synthetic coding**
  - Speech, music (e.g. Text-to-speech, MIDI)
- **Natural coding**
  - HVXC low rate clean speech coder
  - CELP wideband speech coder
  - **GA General Audio Coding (AAC-based)**
  - Twin VQ Additional Coding Tools to increase the coding efficiency at very low bitrates
- **Scalability**
- **New tools in AAC**
  - Perceptual Noise Substitution – only „noise flag“ and the total noise power is transmitted – noise is re-synthesized at the decoder

MPEG 4 PNS

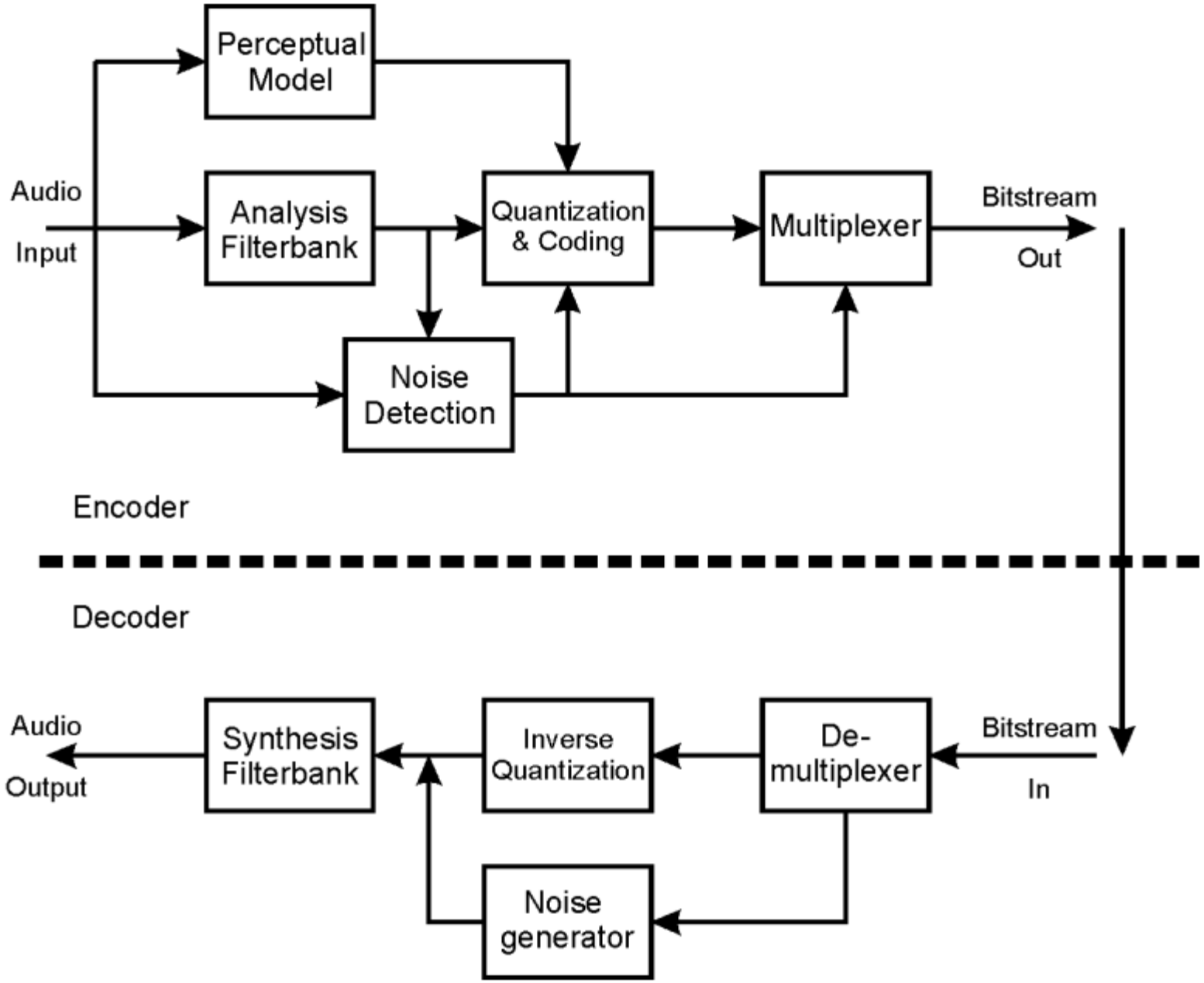
Perceptual Model
Audio Input
Analysis Filterbank
Quantization & Coding
Multiplexer
Bitstream Out
Noise Detection
Encoder
Decoder
Audio Output
Synthesis Filterbank
Inverse Quantization
De-multiplexer
Bitstream In
Noise generator

MPEG4

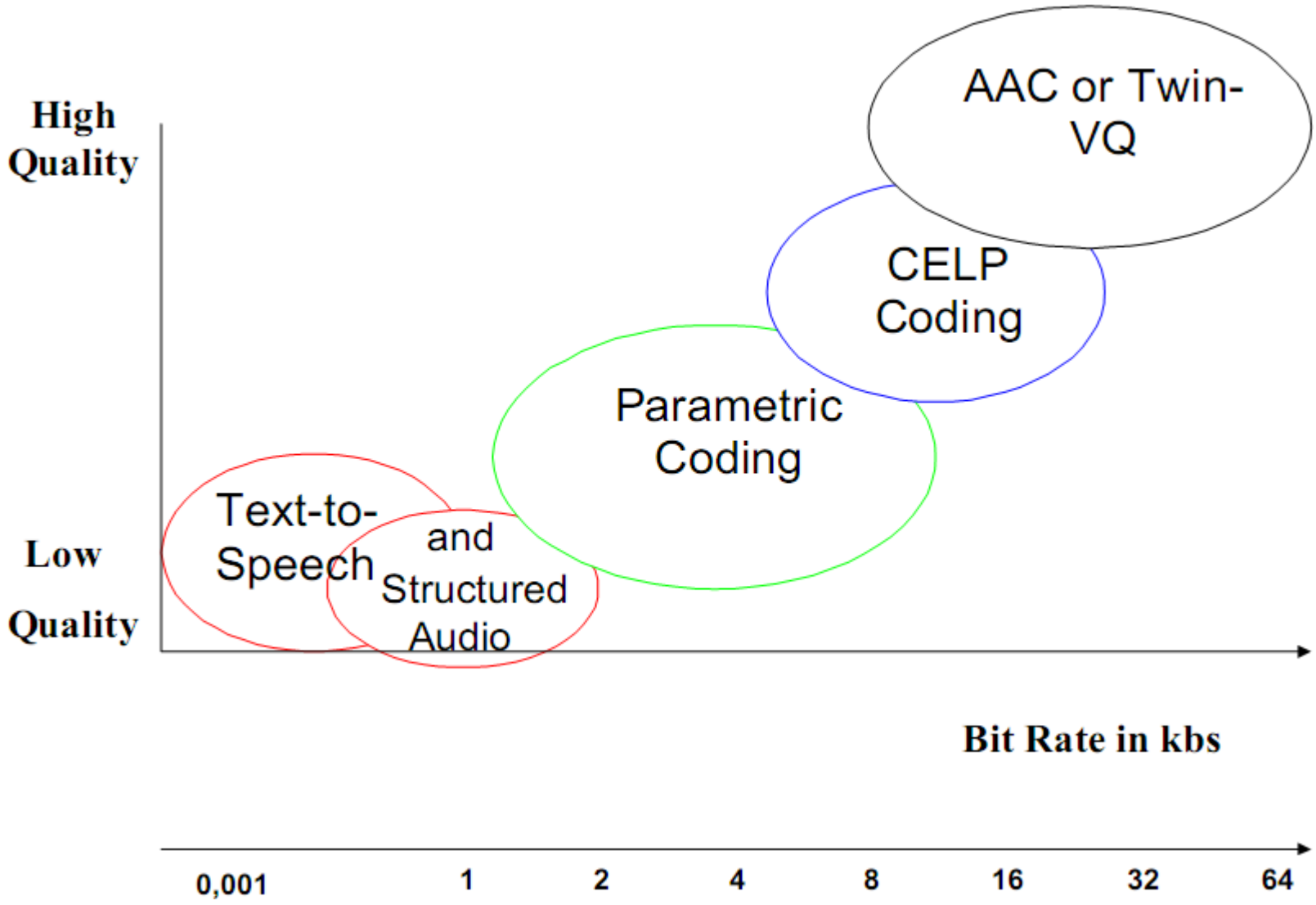
High Quality
Low Quality
AAC or Twin-VQ
CELP Coding
Parametric Coding
Text-to-Speech
and Structured Audio
Bit Rate in kbs
0,001
1
2
4
8
16
32
64

MPEG4 AAC

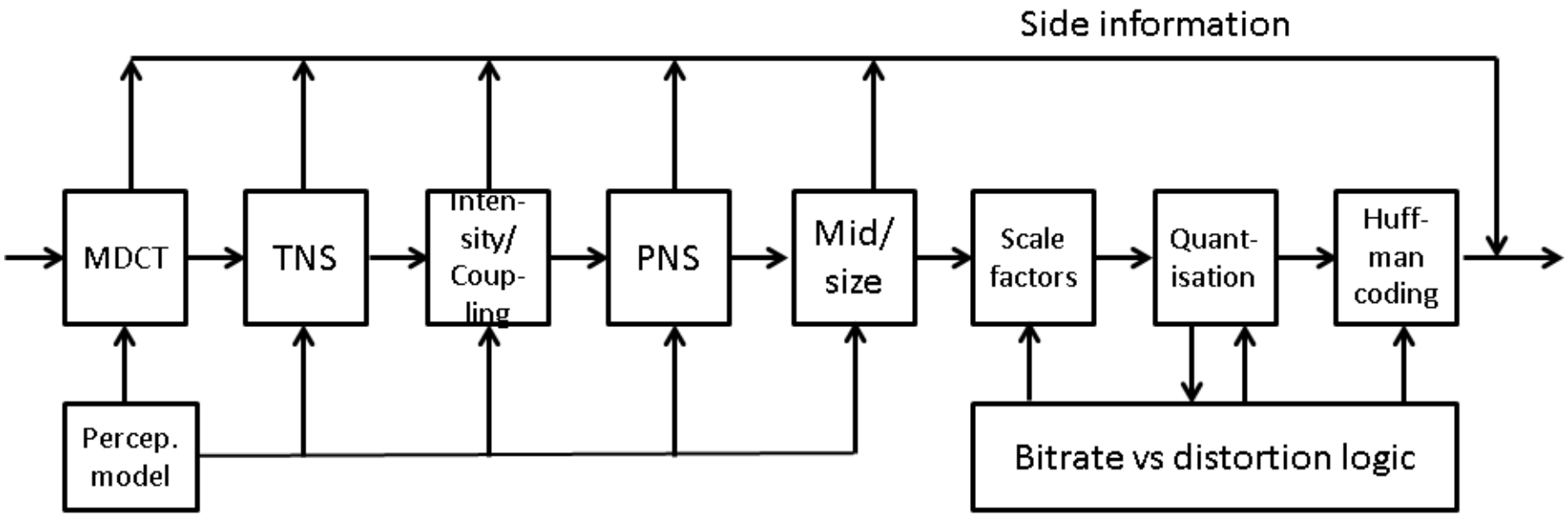

http://ride.chiariglione.org/mpeg-4-inside-audio/

TWIN-VQ encoder

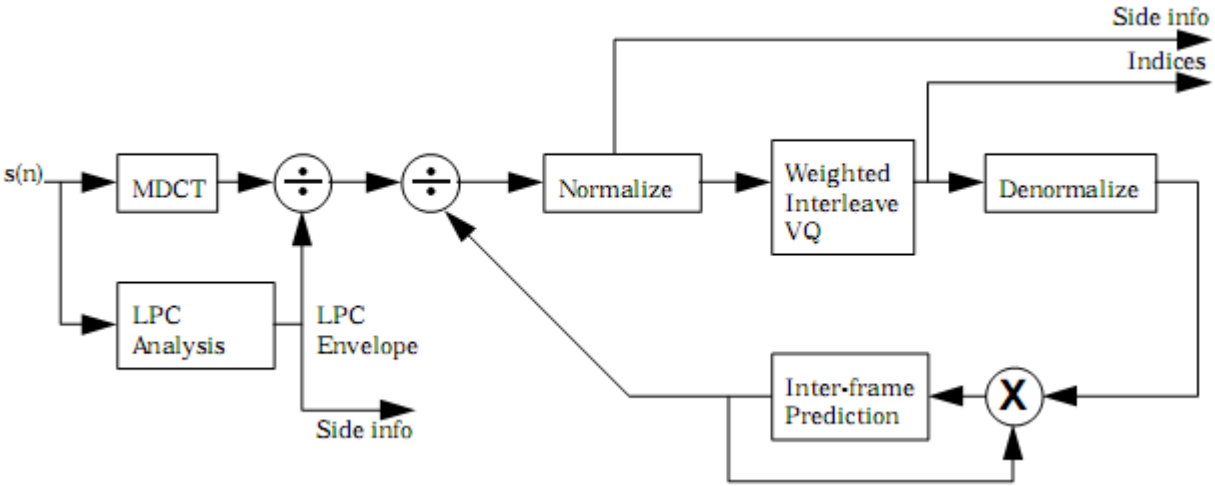

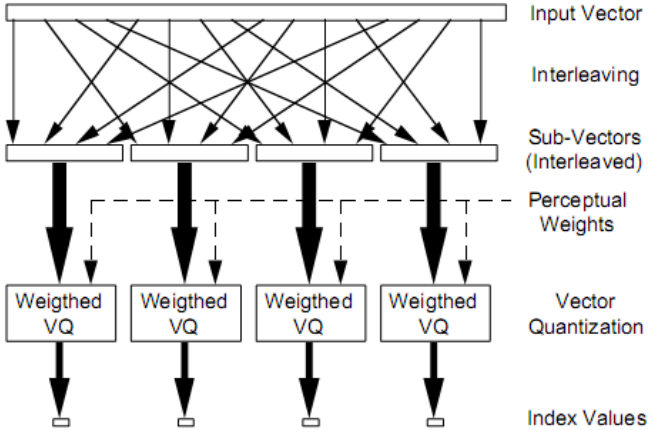

- **LPC analysis**
  - MDCT coefficients divided by LPC envelope = first step residuum (spectral flattened) – fine structure is not affected
- **Spectral inter-frame redundancy**
  - First step residual divided by a predicted fine structure envelope
  - Prediction computed as a weighted sum of three previous quantized fine structure envelopes – backward prediction
- **Interleaved VQ**
  - Applied to the normalized second step residual

Herre, Temporal Noise Shaping, Quantization and Coding Methods in Perceptual Audio Coding: A Tutorial Introduction. AES 17th Conf. 1999

MPEG4 SSC (scalable encoder)

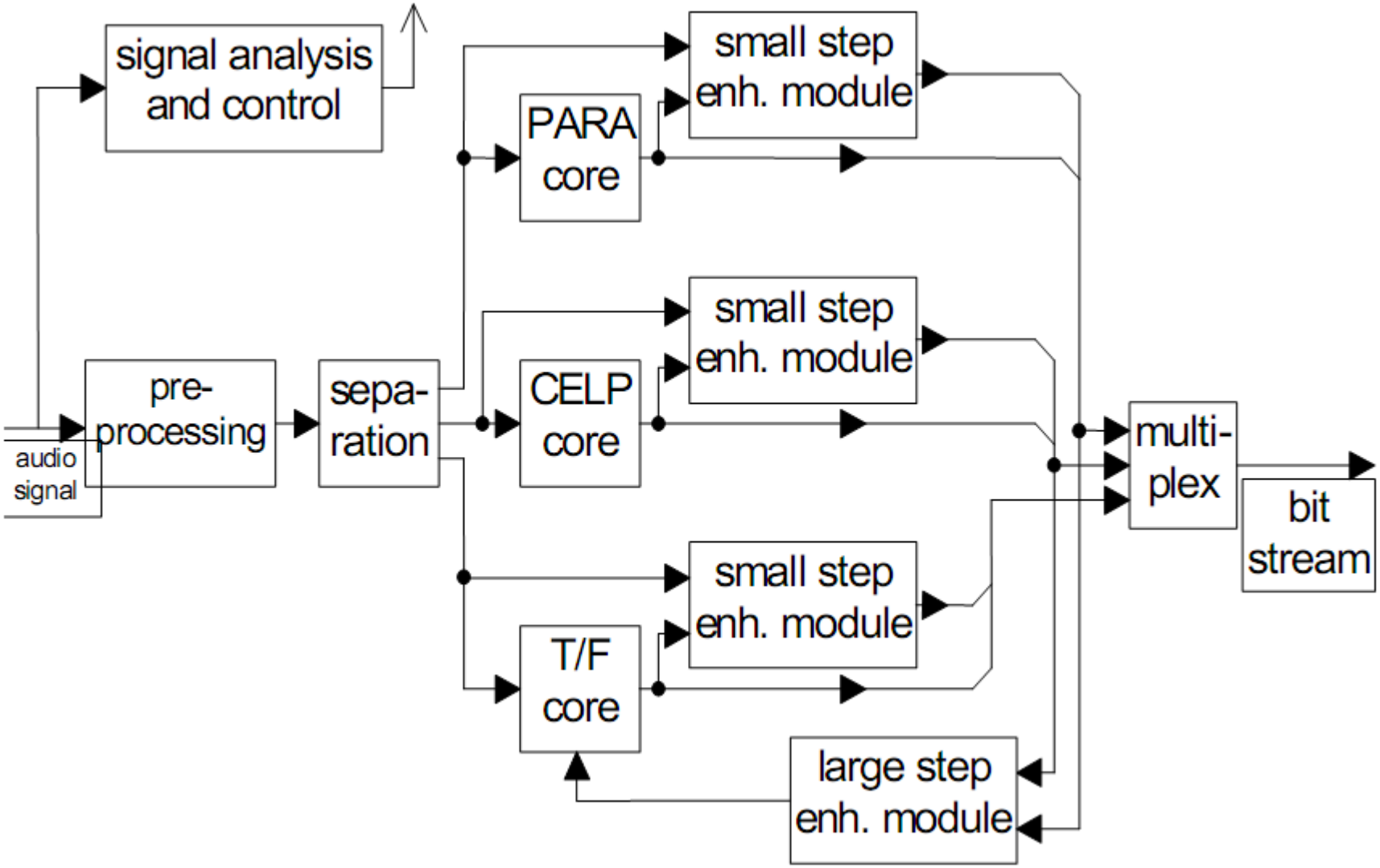

MPEG-4 HE-AAC

- HE-AACv1 (AAC LC + SBR)
- HE-AACv2 (AAC LC + SBR + PS)

- Spectral Band Replication (SBR)

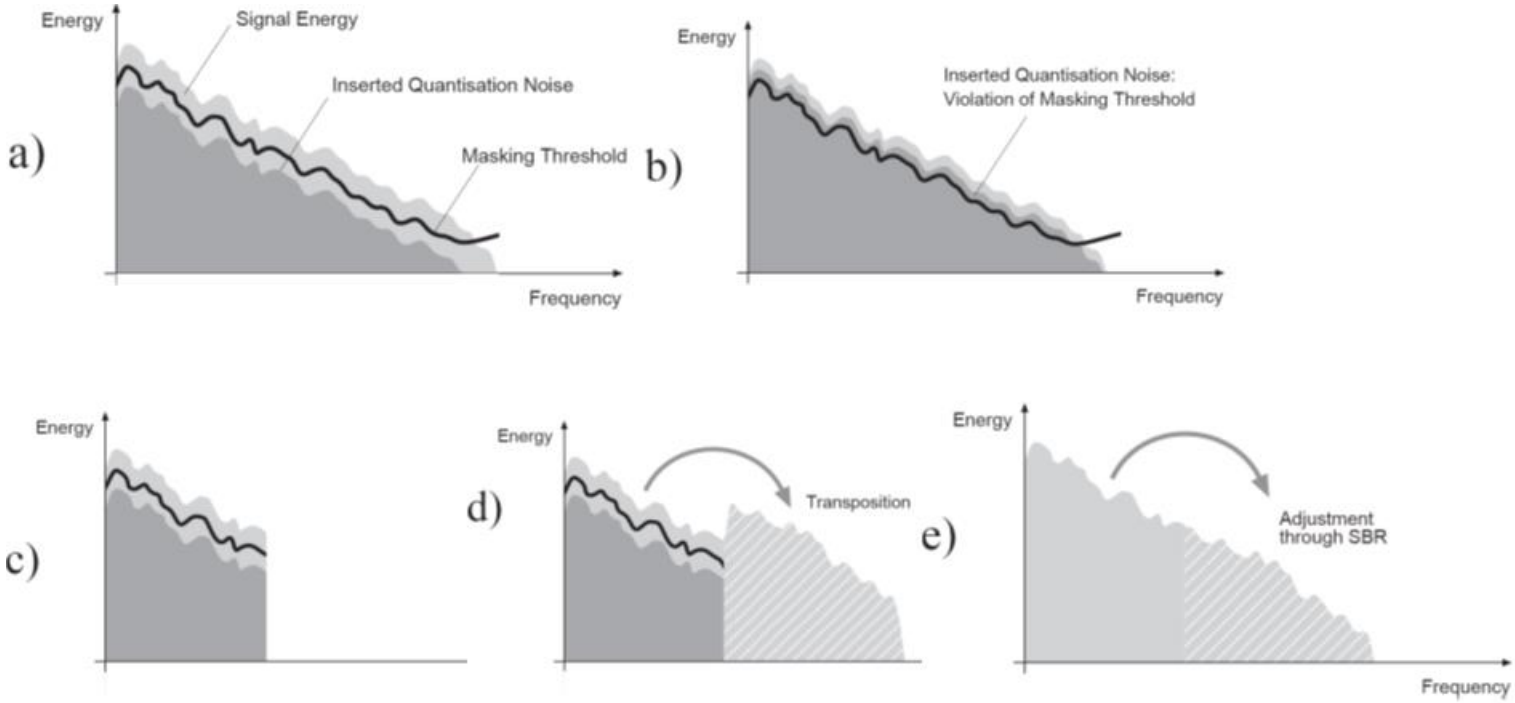

- Parametric Stereo (PS)

- Forward and backward compatibility

http://ride.chiariglione.org/mpeg-4-inside-audio/

MPEG timeline

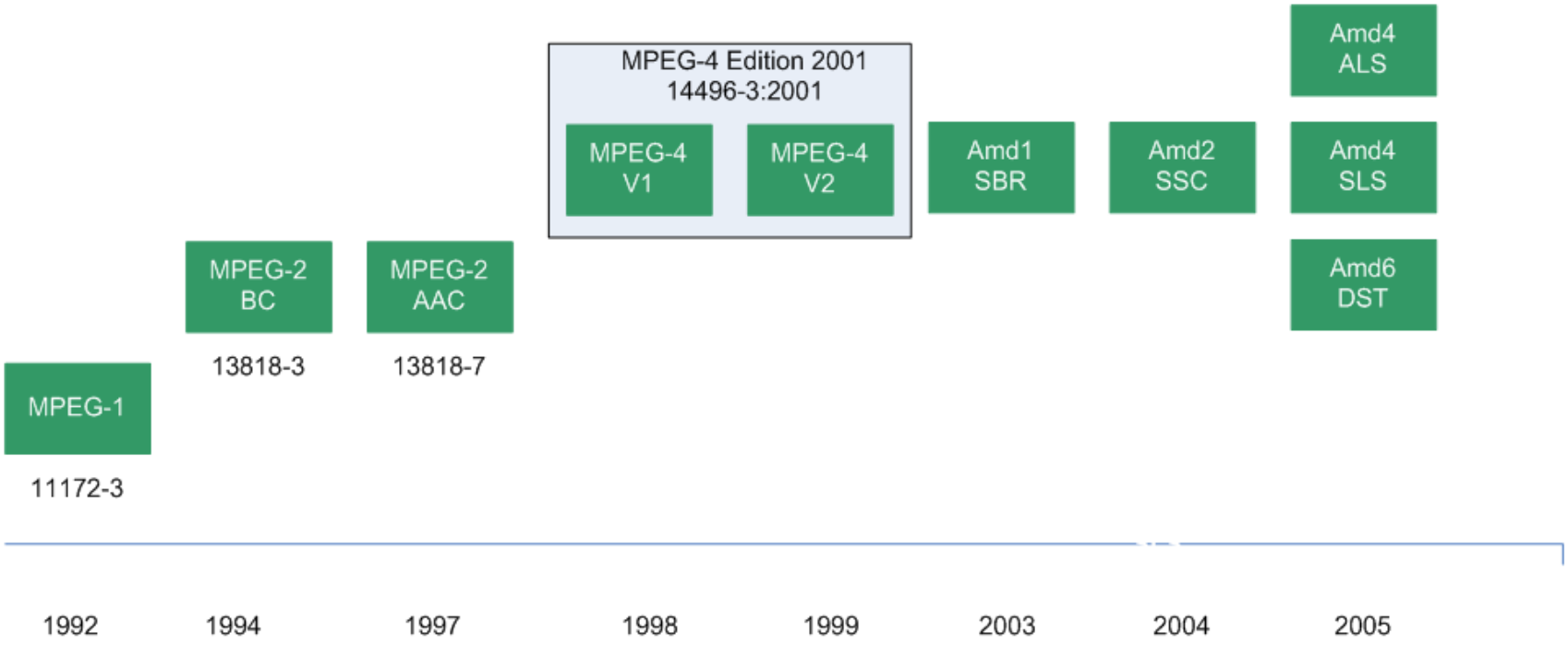

- **SBR – Spectral Band Replication**
- **SSC - Parametric coding of high quality audio**
- **ALS – Audio lossless coding**
- **SLS – Scalable lossless coding**
- **DST – Direct Stream Transport (1-bit stream)**

http://ride.chiariglione.org/mpeg-4-inside-audio/

MPEG-D

- http://mpeg.chiariglione.org/standards/mpeg-d

- **MPEG Surround (MPS 2006)**
- **Spatial Audio Object Coding (SAOC 2010)**
- **Unified Speech and Audio Coding (USAC 2012)**
  - Perceptual coding
    - Perceptually shaped quantization noise
    - Parametric coding of the upper spectrum region (SBR)
    - Parametric coding of the stereo sound
  - Source coding – model of sound (speech) production
- **Dynamic Range Control (DRC)**
  - Matched to listening situation (environment, production type)
  - Loudness control
  - Peak and clipping control

MPEG-D USAC

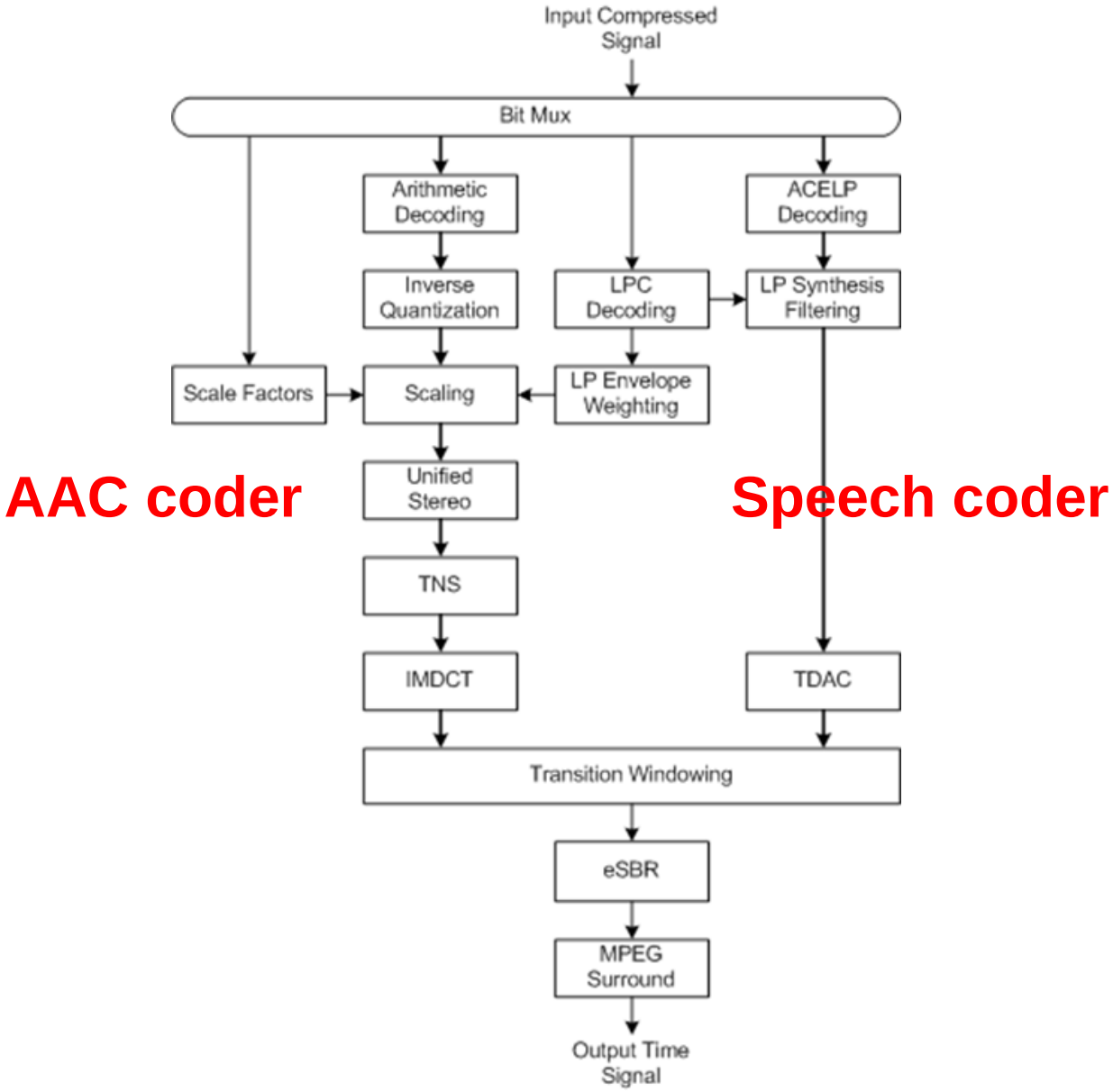

http://mpeg.chiariglione.org/standards/mpeg-d/unified-speech-and-audio-coding

xHE-AAC

https://www.iis.fraunhofer.de/en/ff/amm/broadcast-streaming/xheaac.html

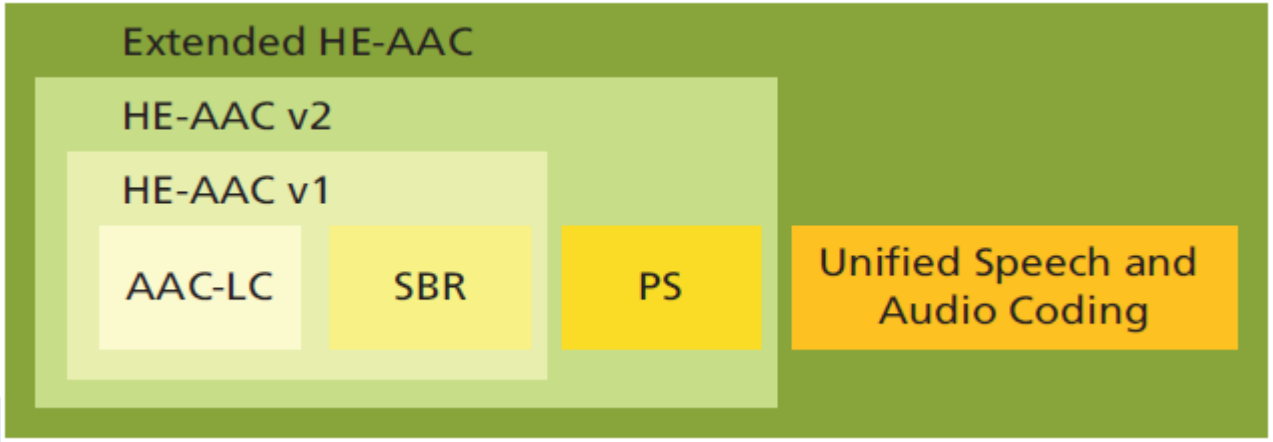

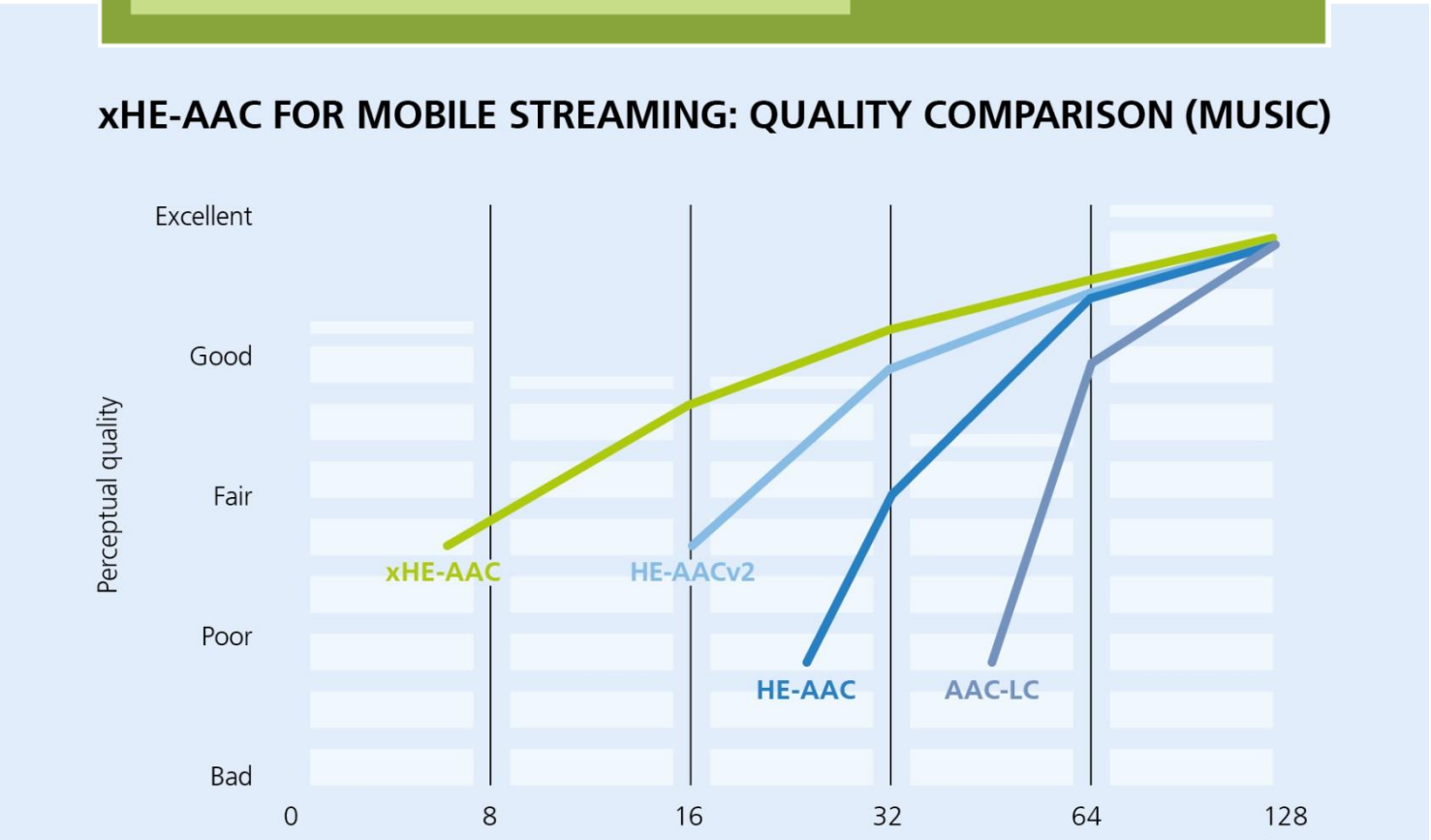

Ogg Vorbis

https://xiph.org/vorbis/

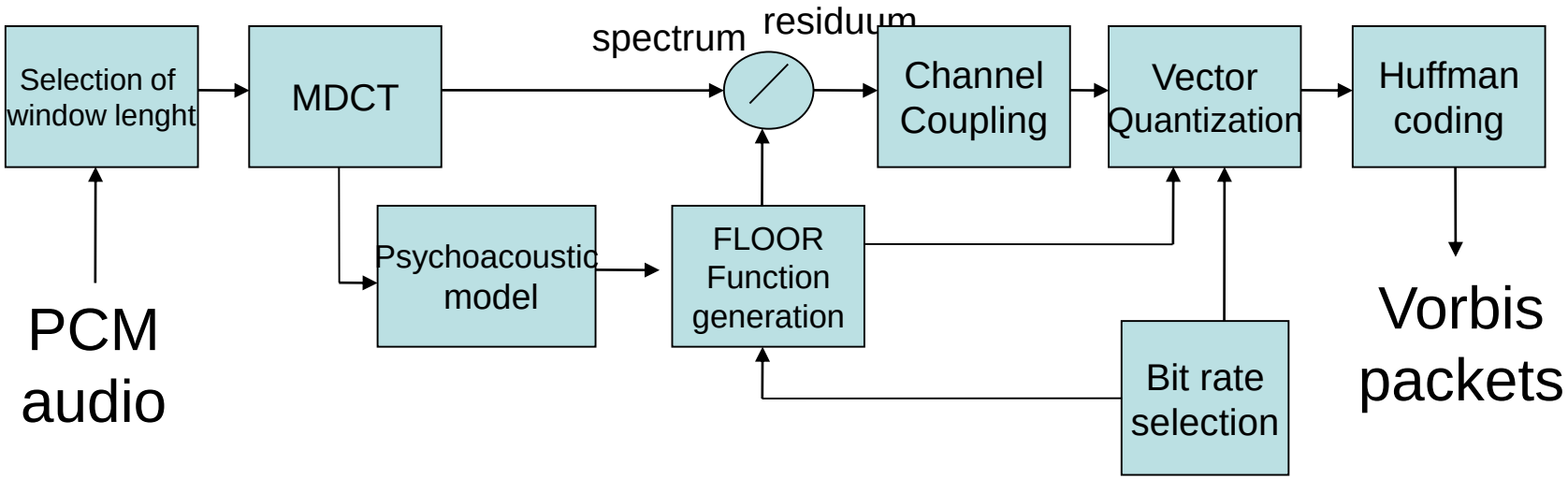

Herrera, M: Application of psychometric methods for the subjective evaluation of audio-coding systems, Praha 2006

Opus

- https://opus-codec.org
- **SILK – speech codec, based on LPC**
- **CELT – wideband codec, based on MDCT**

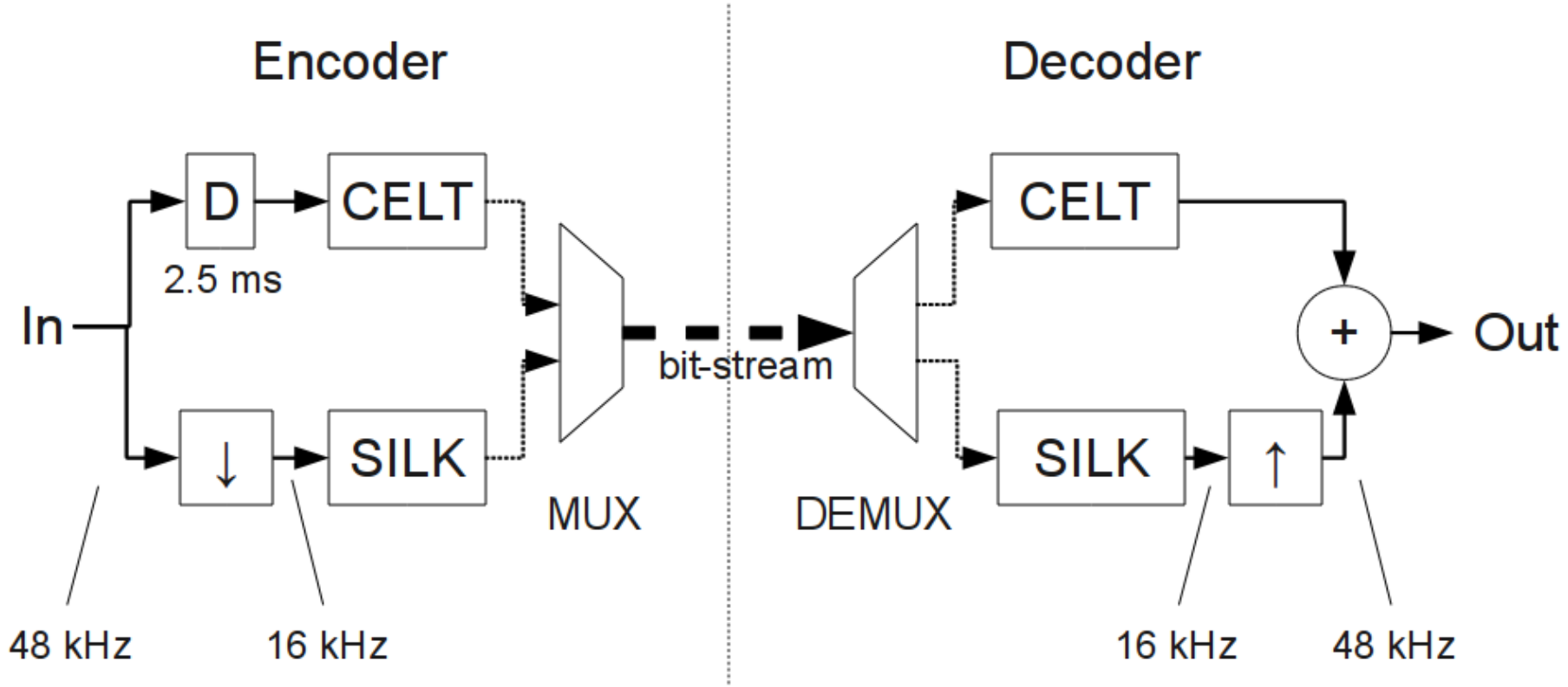

Dolby AC-3

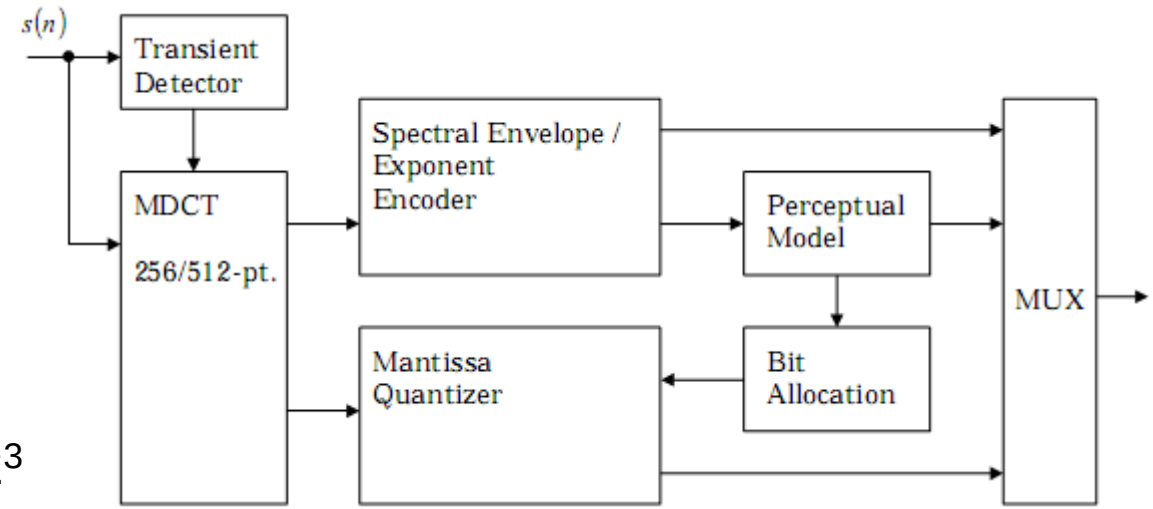

110.101 =
0.110101 x 2^3

1. **MDCT** (overlapping blocks of 512, windowed, transformed, decimated to 256 freq. coeff.)
2. Freq. coefficients represented in binary exponential notation as a **binary exponent** and a **mantissa**
3. The set of **exponents** is encoded into a coarse representation of the signal spectrum - **the spectral envelope**. (coding strategies depends on stationarity of the signal)
4. This **spectral envelope** is used by the core **bit allocation** routine which determines how many bits to use to encode each individual **mantissa**.
5. The **mantissa is quantized** according to the bit allocation informations.
6. The spectral envelope and the coarsely quantized mantissas for 6 audio blocks (1536 audio samples) are formatted into an AC-3 frame.
7. The AC-3 bit stream (from 32 to 640 kbps) is a sequence of AC-3 frames.

Dolby AC-3

- Sample rates: 32, 44.1, and 48 kHz
- Bit rates: 32 to 640 kbps, variable
- High quality output at 64 kbps per channel
- Delay roughly 100 ms
- MDCT filter bank (oddly-stacked TDAC) KBD window
- Exponents/mantissa quantization/encoding
- Spectral envelope represented by exponents
- Signal-adaptive exponent strategy
- Hybrid forward-backward adaptive perceptual model
- Parametric bit allocation
- Uniform quantization of mantissas
- Isolated perceptual model improvements possible
- Multiple channels processed as an ensemble
- Frequency-selective intensity coding, LR, MS
- Robust decoder downmix functionality
- Integral dynamic range control system
- Board-level real-time encoders available
- Chip-level real-time decoders available

Quantization and coding

	Filterbank channels	Quantization	Coding
MPEG-1/2 Layer I / II	32	uniform	block companding
MPEG-1/2 Layer III	576 / 192	non-uniform	Huffman coding
MPEG-2 AAC	1024 / 128	non-uniform	Huffman coding
MPEG-4 TwinVQ	1024 / 128 (960/120)	VQ	VQ
AC-3	256 / 128	uniform	block companding
ATRAC	96 .. 512	uniform	block companding

Herre, Temporal Noise Shaping, Quantization and Coding Methods in Perceptual Audio Coding: A Tutorial Introduction. AES 17th Conf. 1999

Codec comparison

Group	Algorithm	Rate (kbps)	Mean Diff. Grade	Transparent Items	Items Below –1.00
1	AAC	128	-0.47	1	0
	AC-3	192	-0.52	1	1
2	PAC	160	-0.82	1	3
3	PAC	128	-1.03	1	4
	AC-3	160	-1.04	0	4
	AAC	96	-1.15	0	5
	MP-1 L2	192	-1.18	0	5
4	IT IS	192	-1.38	0	6
5	MP-1 L3	128	-1.73	0	6
	MP-1 L2	160	-1.75	0	7
	PAC	96	-1.83	0	6
	IT IS	160	-1.84	0	6
6	AC-3	128	-2.11	0	8
	MP-1 L2	128	-2.14	0	8
	IT IS	128	-2.21	0	7
7	PAC	64	-3.09	0	8
8	IT IS	96	-3.32	0	8

Codec comparison

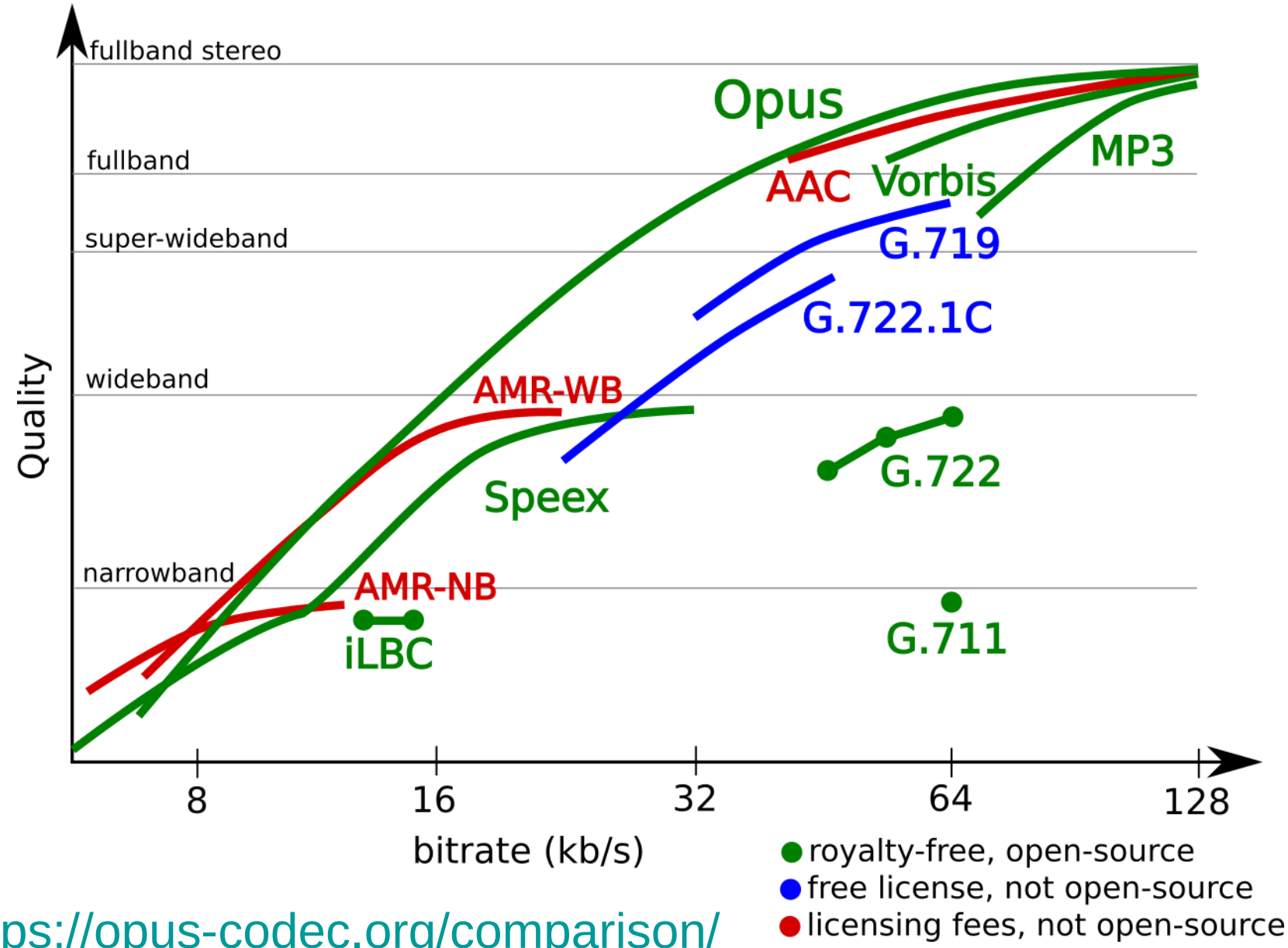

https://opus-codec.org/comparison/

Codecs using for broadcasting & streaming

Codec	Typically used bit rates (kbps)	Digital audio broadcasting systems and web-casting applications deploying this codec
MP2	64-192	DAB
HE-AACv2	24-128	DAB+, DRM, DRM+, DMB, Wimp, Web streaming, Deezer
MP3	64-320	Web streaming, Deezer
Ogg Vorbis	64-320	Web streaming, Spotify
AAC-LC	32-320	Web streaming, Wimp, ISDB, iTunes
Opus	32-320	Web streaming
ALAC	≥ 700	iTunes, Wimp (iOS)
FLAC	≥ 700	Wimp, Online music catalogs

Počta, P., Beerends, J. G., "Subjective and Objective Assessment of Perceived Audio Quality of Current Digital Audio Broadcasting Systems and Web-Casting Applications,„ IEEE Trans. on Broadcasting, 2015.

EnCodec (Meta)

- **High Fidelity Neural Audio Compression**

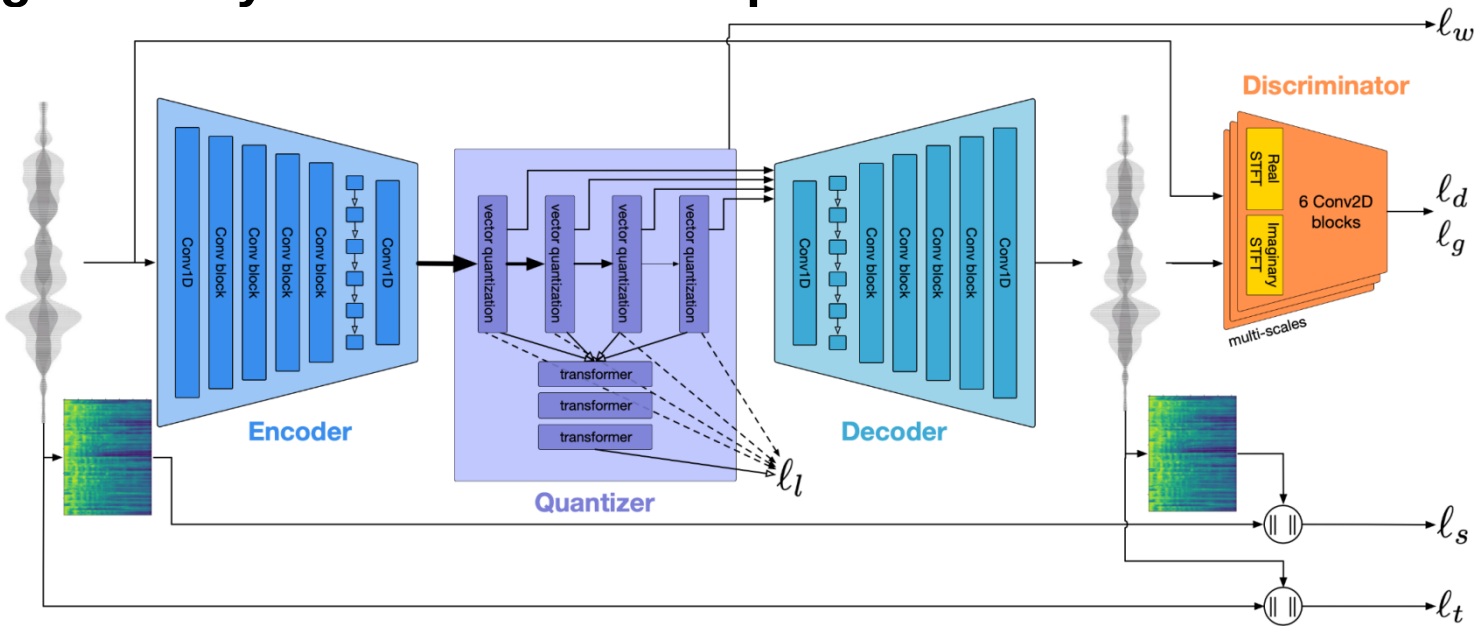

Model	Bandwidth	Entropy Coded	Compression	MUSHRA
Reference	-	-	1×	**95.1±1.8**
MP3	64 kbps	-	24×	82.7±3.2
Opus	6 kbps	-	256×	17.7±5.9
Opus	24 kbps	-	64×	82.9±3.7
EnCodec	6 kbps	4.2 kbps	256×	82.9±2.4
EnCodec	12 kbps	8.9 kbps	128×	**88.0±2.7**
EnCodec	24 kbps	19.4 kbps	64×	**87.5±2.6**

https://github.com/facebookresearch/encodec

Joint stereo coding

- **Motivation**
  - Reduction of the bitrate due to inter-aural redundancy/irrelevancy
  - In some cases independent coding of the individual channels leads to special artifacts
- **Stereo redundancy – irrelevancy**
  - There is not much correlation between the L and R time signals – for most signals
  - Power spectra of both channels are often highly correlated
  - Exact localization of audio sources decreases at high frequencies
- **Stereo unmasking effect – certain coding artifacts which are masked in single channel coding can become audible when presented as a stereo signal coded by a dual mono coding system.**
  - Binaural Masking Level Difference – esp. on low freq.
- **Precedence effect**
  - not the loudest but the first wavefront
  - Time relationship can be distorted by certain coding techniques

Kahrs, M, Brandenburg, K, Applications of Digital Signal Processing to Audio and Acoustics, Kluwer 1998

Conesquences to perceptual coders

- **ITD is less important at high frequencies**
  - “Intensity stereo coding” preserves only intensity information
- **Binaural masking level difference**
  - Decrease of masked threshold due to binaural hearing: up to 15 dB decrease.
  - Coding artifacts may be audible for stereo sounds
- **Summing of localization**
  - If the same sounds come from different position in space within 1 ms, they make a fused image localized as given by weighted sum of the sounds are perceived as fused
- **Precedence effect**
  - If the same sounds come with a delay between 1 and 5 ms, the first sound determines the localization.

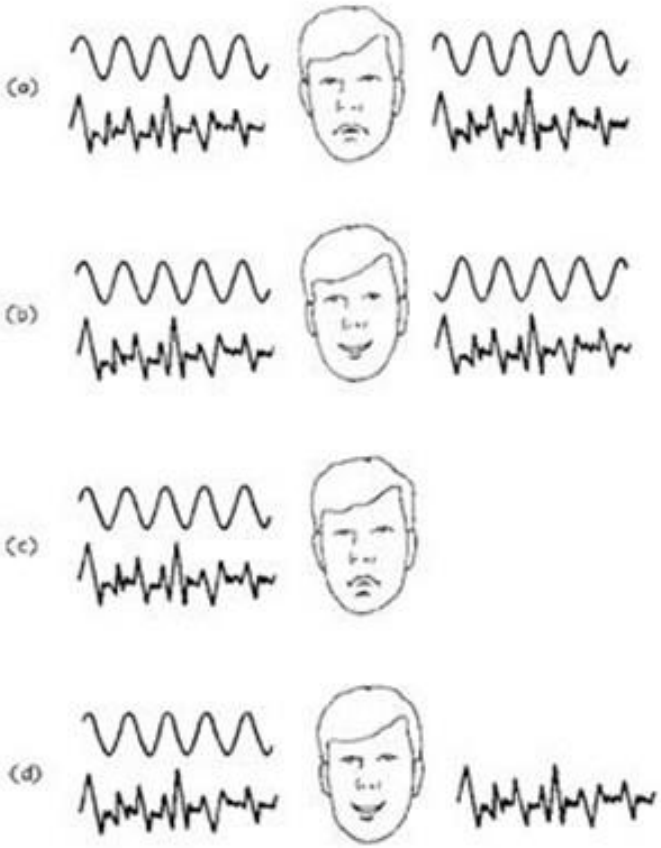

Joint stereo coding

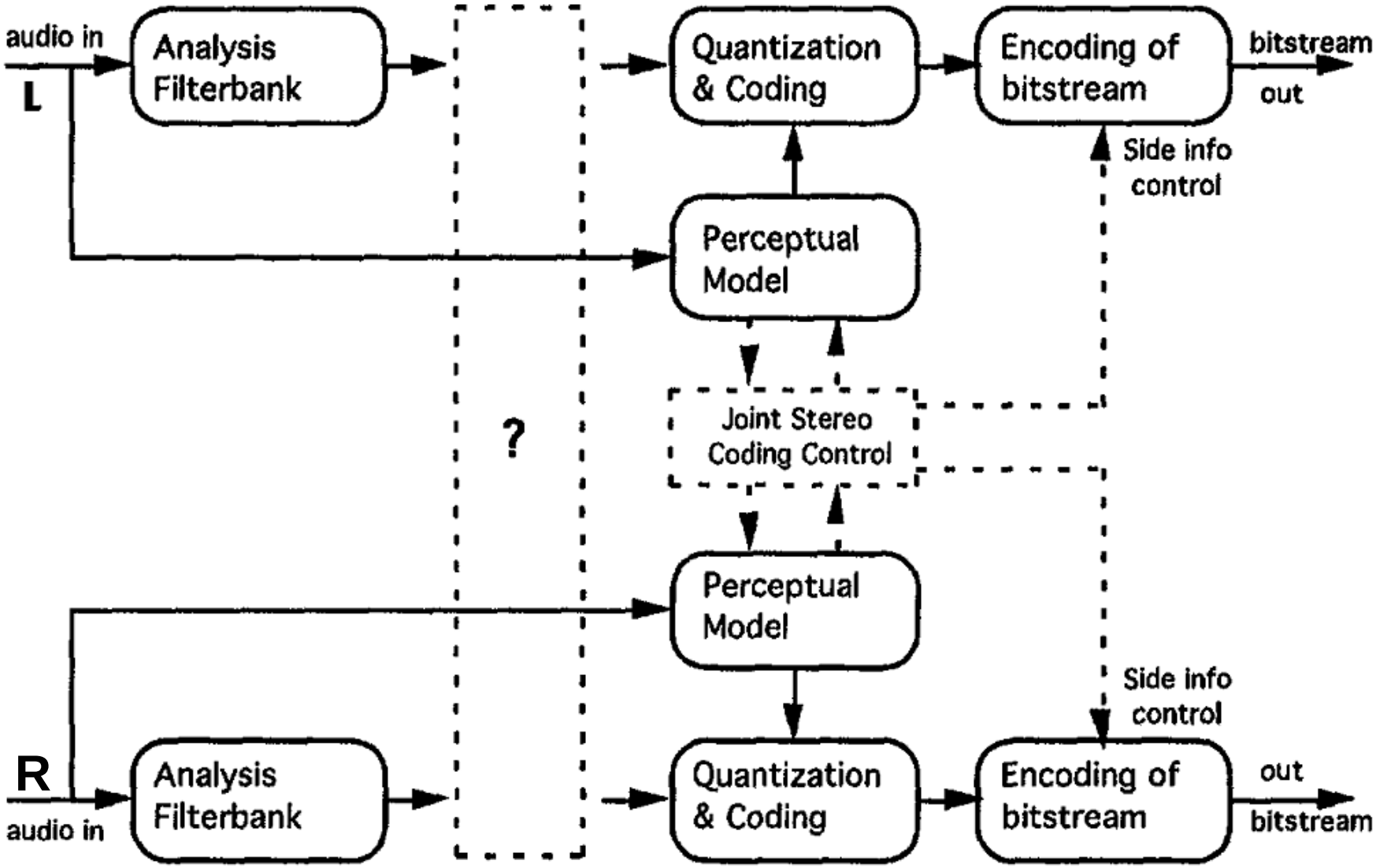

Stereo techniques

- **Localization**
  - Horizontal plane – ITD x ILD
  - Median plane? (head movements, color changes – pinna, shoulders)

Basic stereo microphone arrays:

X-Y:

X-Y: Mikes at 90° to 120°

ORTF:

ORTF: Mikes at 110° with 7" spacing of capsules

A-B:

A-B: Mikes aimed forward with distance of 18 to 24"

AKG microphones in the Home Studio, AKG inc.

Review

STEREO PICKUP SYSTEMS	MICROPHONE TYPES	MICROPHONE POSITIONS	
X-Y	2 - CARDIOID	AXES OF MAXIMUM RESPONSE AT 135° SPACING: COINCIDENT	
ORTF (FRENCH BROADCASTING ORGANIZATION)	2 - CARDIOID	AXES OF MAXIMUM RESPONSE AT 110° SPACING: NEAR-COINCIDENT (7 IN.)	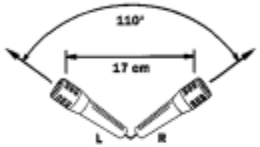
NOS (DUTCH BROADCASTING FOUNDATION)	2 - CARDIOID	AXES OF MAXIMUM RESPONSE AT 90° SPACING: NEAR-COINCIDENT (12 IN.)	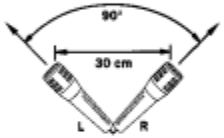
STEREOSONIC	2 - BIDIRECTIONAL	AXES OF MAXIMUM RESPONSE AT 90° SPACING: COINCIDENT	
MS (MID-SIDE)	1 - CARDIOID 1 - BIDIRECTIONAL	CARDIOID FORWARD-POINTED; BIDIRECTIONAL SIDE-POINTED; SPACING: COINCIDENT	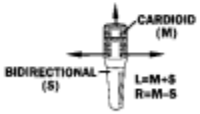
SPACED	2 - CARDIOID OR 2 - OMNIDIRECTIONAL	ANGLE AS DESIRED SPACING: 3-10 FT.	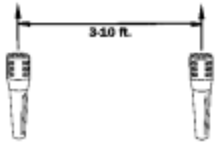

Boudreau et al., Microphone Techniques for Studio Recording, Shure Inc. 2004

Stereophony

- **Capture techniques**
  - Coincident
  - Spaced
  - Near coincident
- **Listener on axis**
- **Coding**
  - Lossless
  - Dual mono – problems with the stereo unmasking effects
  - Joint stereo
    - M/S stereo coding
    - Intensity stereo coding

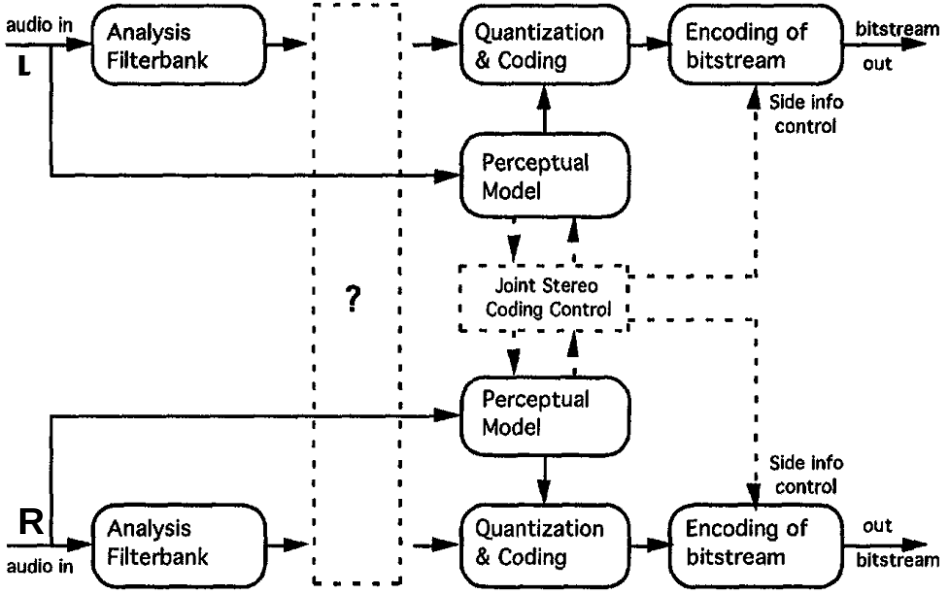

M/S stereo coding

- **Matrixing in the coder - similar to the technique used in FM stereo transmission**
  - M= c L + c R
  - S= c L – c R
- **Dematrixing in the decoder**
  - L= c M + c S
  - R= c M – c S

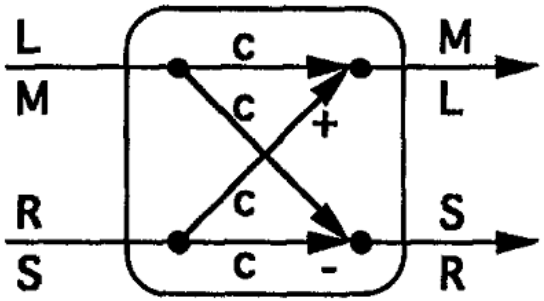

$c = 1 / \sqrt{2}$

- **Emphasis on redundancy removal – prevention of the stereo unmasking effects**
- **Perfect reconstruction – lossless**
- **Saving depends on the input signal – up to 50% for L=R**
- **Useful for the whole spectral range – preserves the full spatial information**

Kahrs, M, Brandenburg, K, Applications of Digital Signal Processing to Audio and Acoustics, Kluwer 1998

Intensity stereo coding

- **Intensity stereo coding/dynamic crosstalk/channel coupling**
- **Perception of high frequency components relies on their energy-time envelopes (level)**
  - A single set of spectral values
  - Scaling/angle data for each band

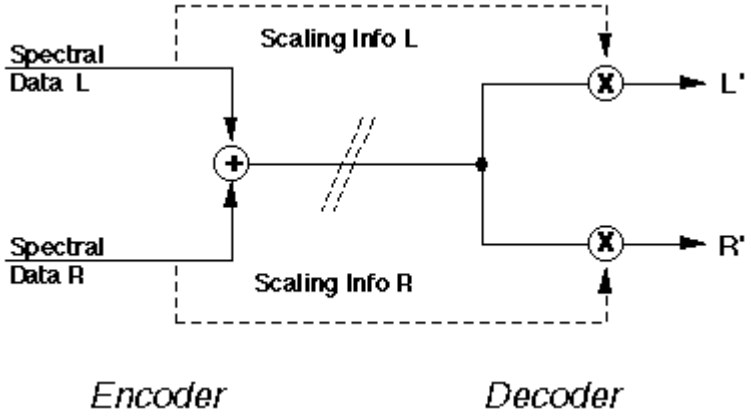

- **Emphasis on irrelevancy reduction – high frequencies**
- **Not perfect reconstruction – a loss of spatial information (less annoying than other coding artifacts)**
- **Saving of 50% of the sample data – saving of about 20% of the net bit-rate, maximum saving at about 40%**
- **Useful only for the high frequency range – used for part of the spectrum**

Kahrs, M, Brandenburg, K, Applications of Digital Signal Processing to Audio and Acoustics, Kluwer 1998

Multichannel coding

- Independent reduction
- Parametric coding (mono/stereo + multichannel parameters for synthesis) – MPEG Surround, Binaural Cue Coding
- Reduction of perceptualy redundant information (e.g. KLT)
- Hiearchical spatial audio coding (ambisonic)
- MPEG-4 content coding (WFS)

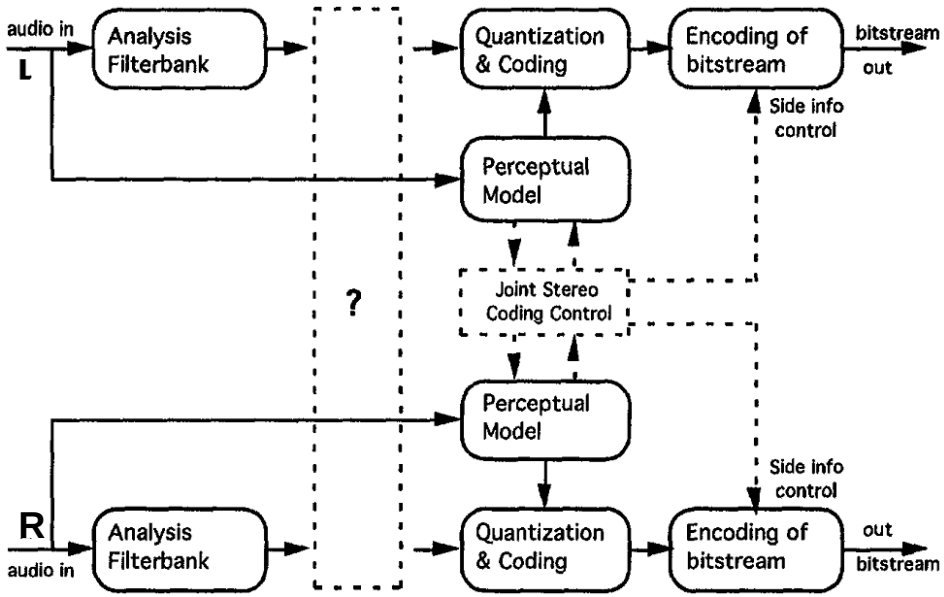

AC-3

- 5.1 format bitrate = 6 x 48 x 18 = 5.185 Mbps into 384 kbps
- Channel coupling at high frequency is possible
- LFE is allways independent (<120 Hz)
- 2/0 mode (rematrixing – analog compatibility)

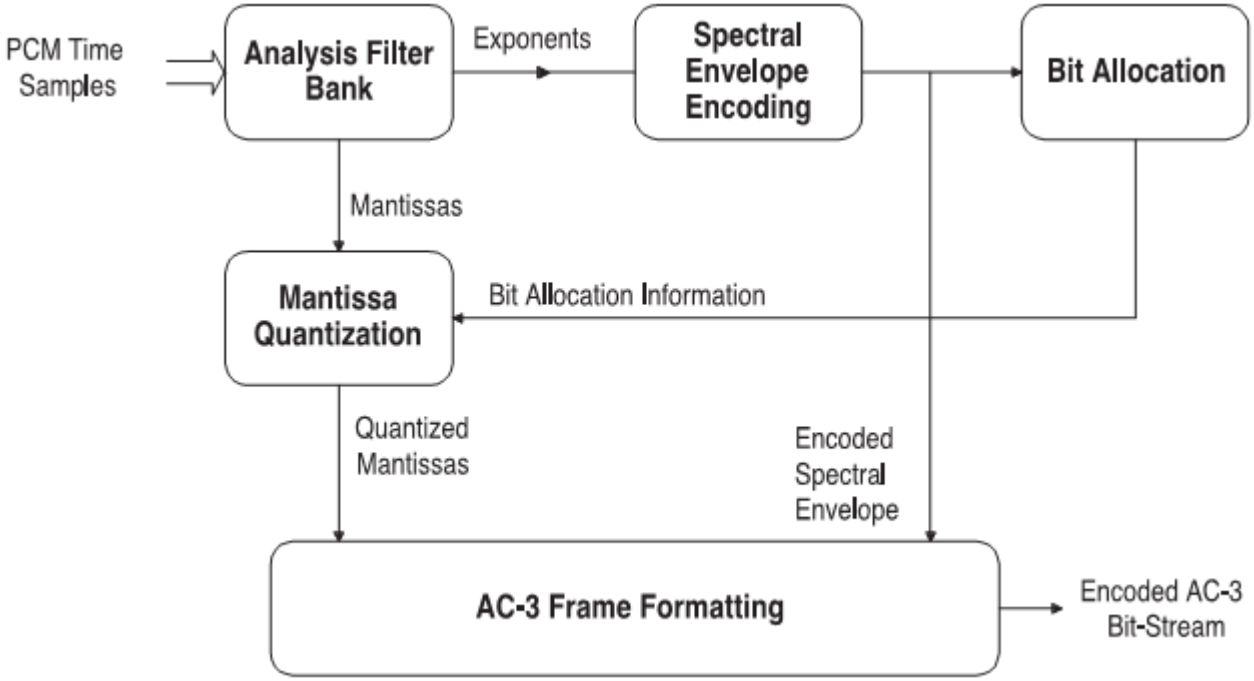

MPEG-4 content coding

- **Separating the signals, sources and the scene**
  - Dry signals
  - Sound scene – **BI**nary **F**ormat for **S**cenes
    - Sound source – radiation characteristics, orientation, position
    - Acoustical environment – two methods
      - Geometrical description – room model
      - Perceptual description – 9 parameters
      - Alternative methods – IR measurement, alternative perceptual description

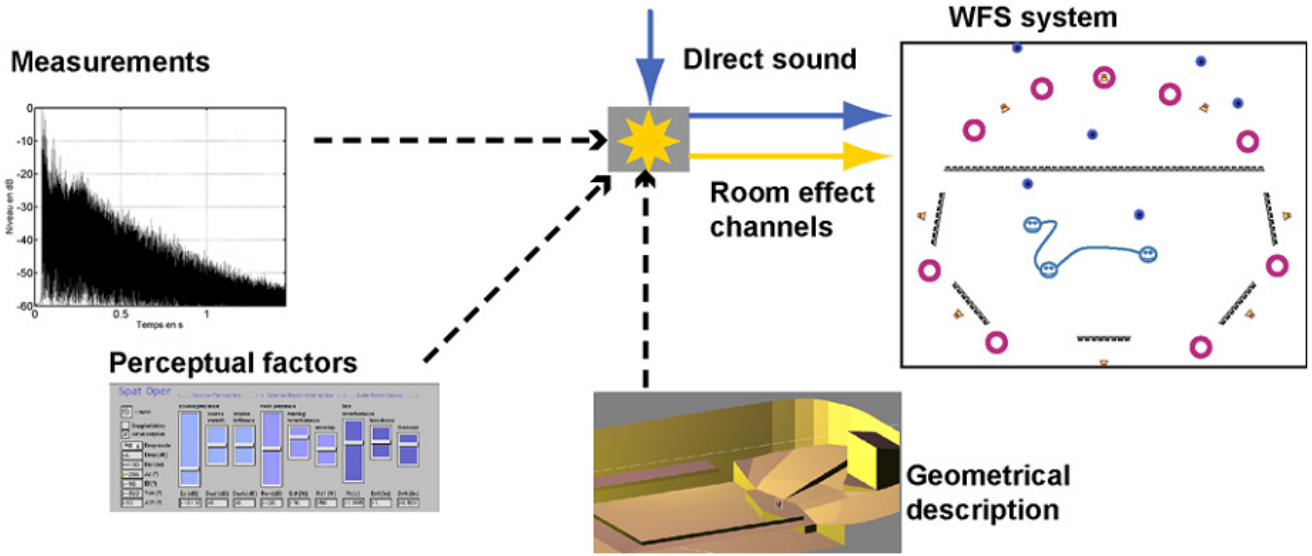

http://recherche.ircam.fr/equipes/salles/WFS_WEBSITE/Documents/WFS_overview.pdf

MPEG-D Surround

- http://www.mpegsurround.com/tech.html

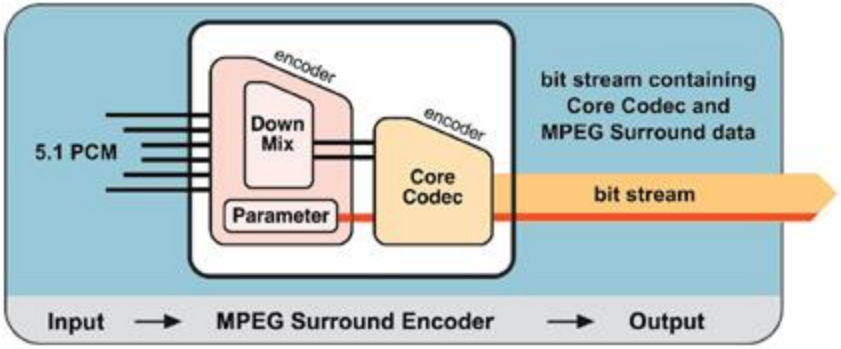

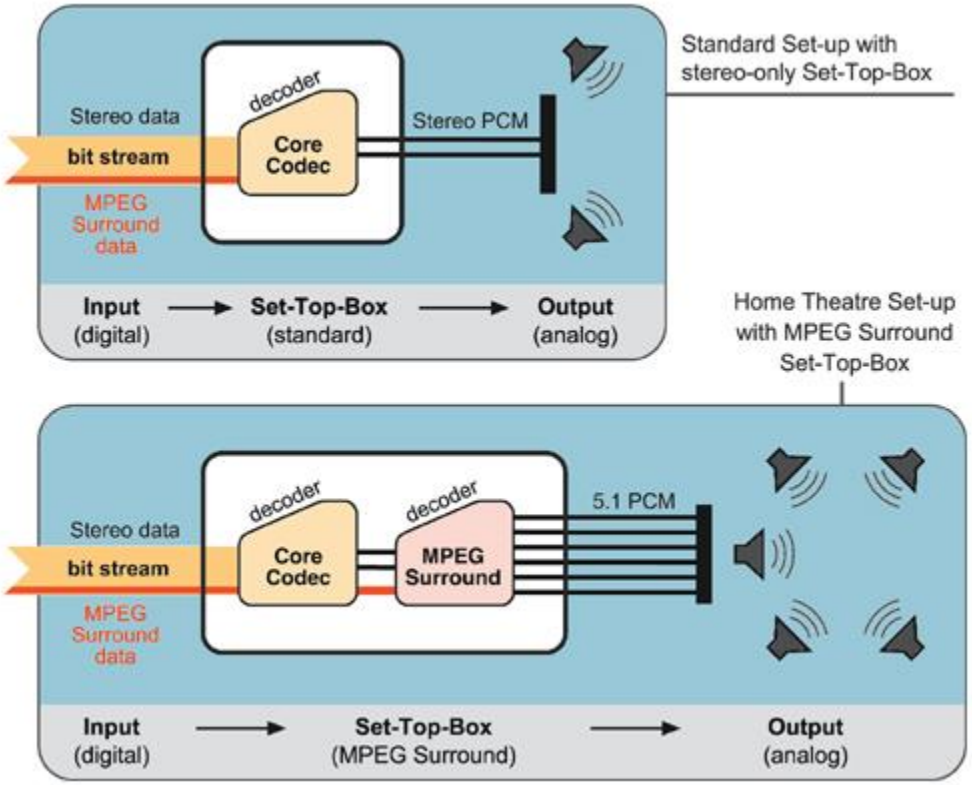

MPEG-H 3D audio

- http://mpeg.chiariglione.org/standards/mpeg-h
- **3D audio**
  - Channel based
  - Object based
  - HOA
- **USAC-3D**
  - channels – format converter
  - objects – object renderer
  - SAOC-3D (channels + objects)
  - HOA
- **USAC**
  - Perceptual codec
  - Quad Channel Element – coding of 4 channels
  - Intelligent Gap Filling (IGF) - better then PNS

Herre, J, Hilpert, J, Kuntz, A, Plogsties, J.: MPEG-H Audio – The New Standard for Universal Spatial/3D Audio Coding. JAES 2015

MPEG-H 3D audio

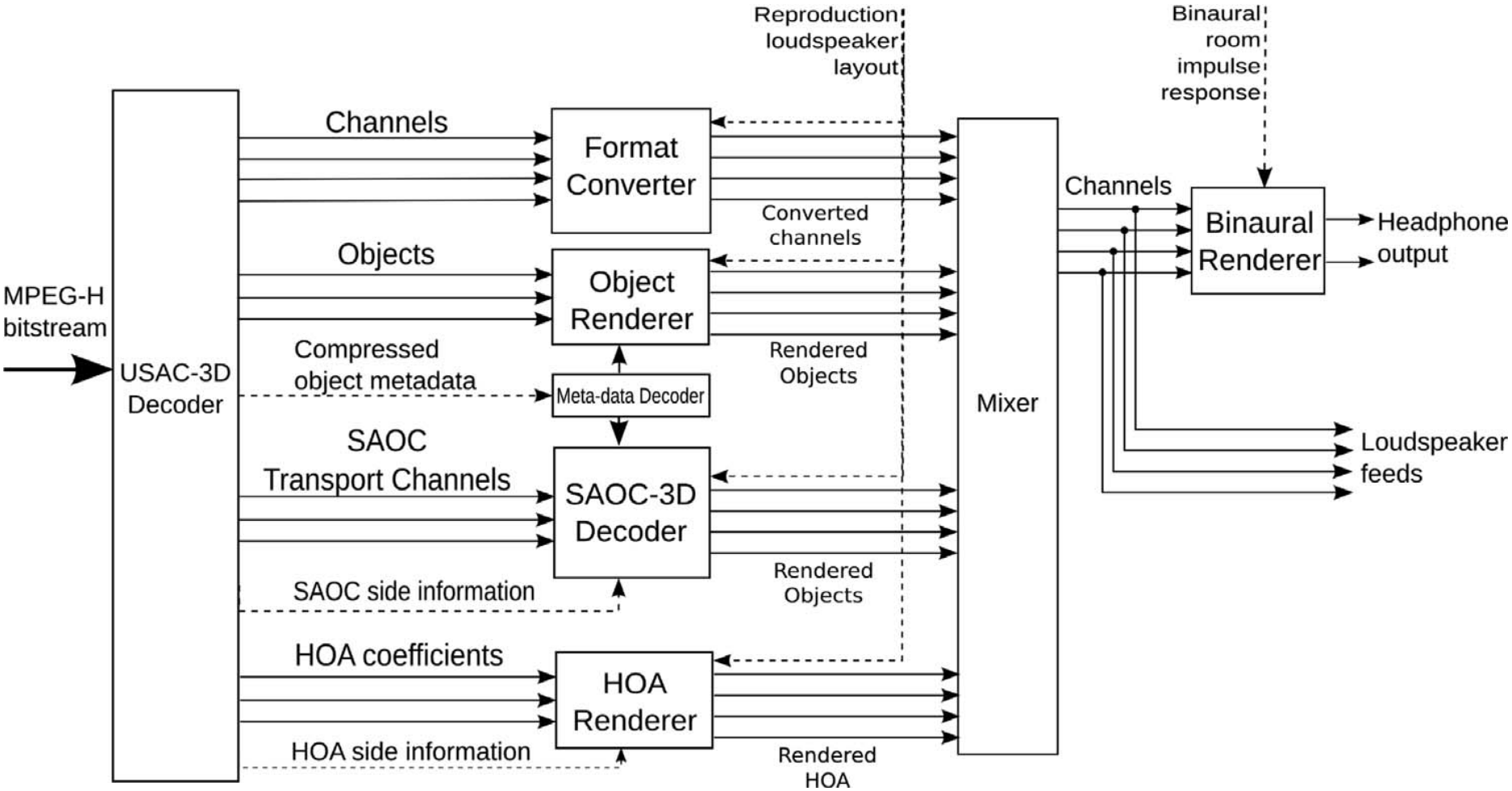

Herre, J, Hilpert, J, Kuntz, A, Plogsties, J.: MPEG-H Audio – The New Standard for Universal Spatial/3D Audio Coding. JAES 2015

MPEG-H audio objects

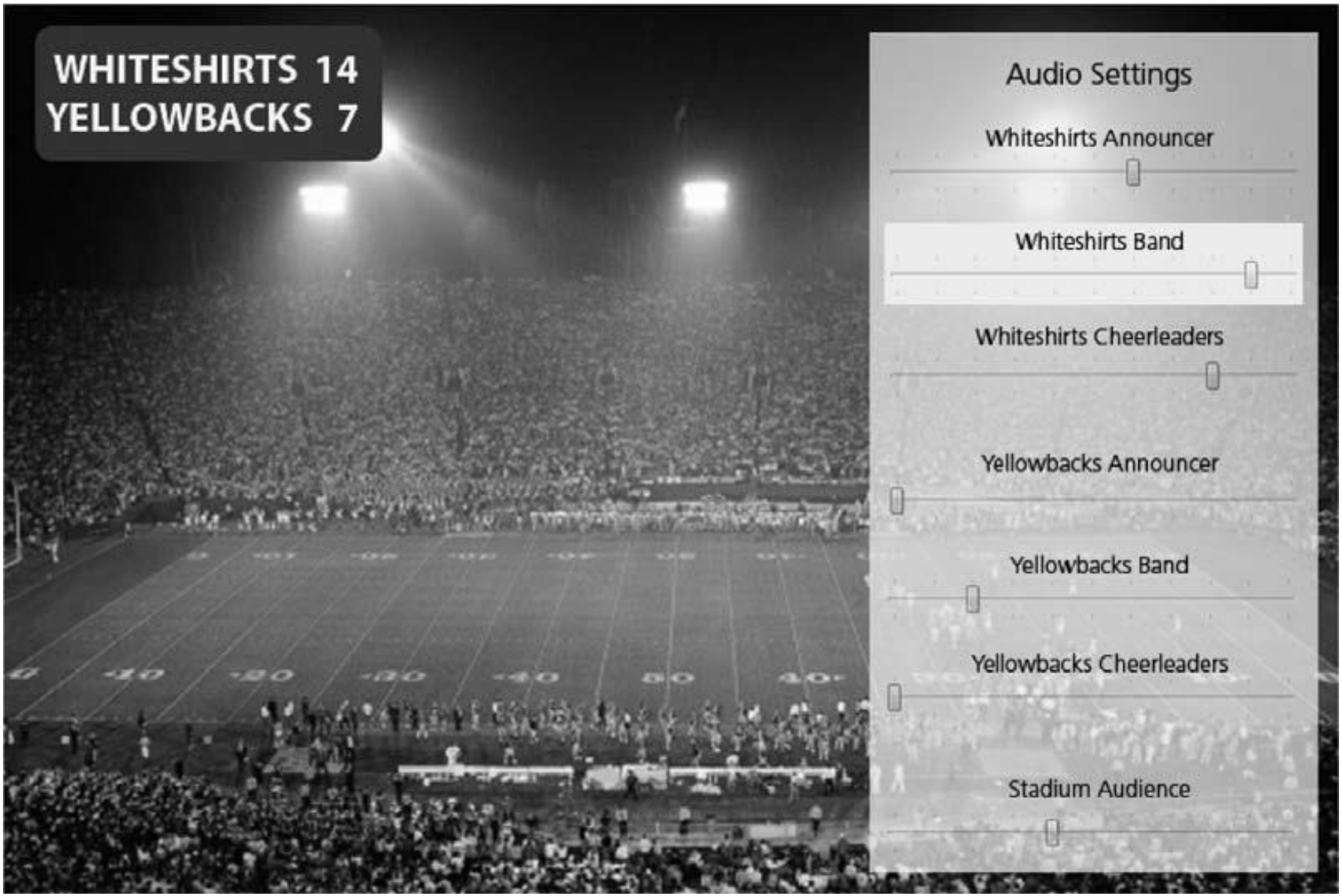

Herre, J, Hilpert, J, Kuntz, A, Plogsties, J.: MPEG-H Audio – The New Standard for Universal Spatial/3D Audio Coding. JAES 2015

DirAC

- Directional part
- Diffuse part

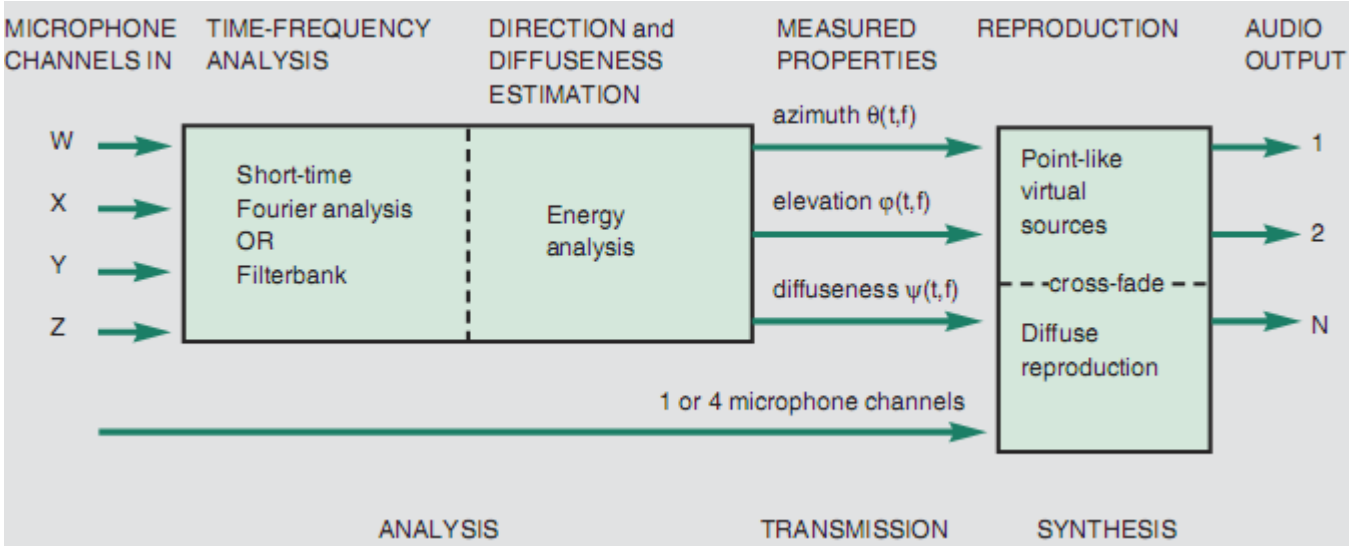

KLT based coding

- Eigenchannels decomposition
- Orthogonal components

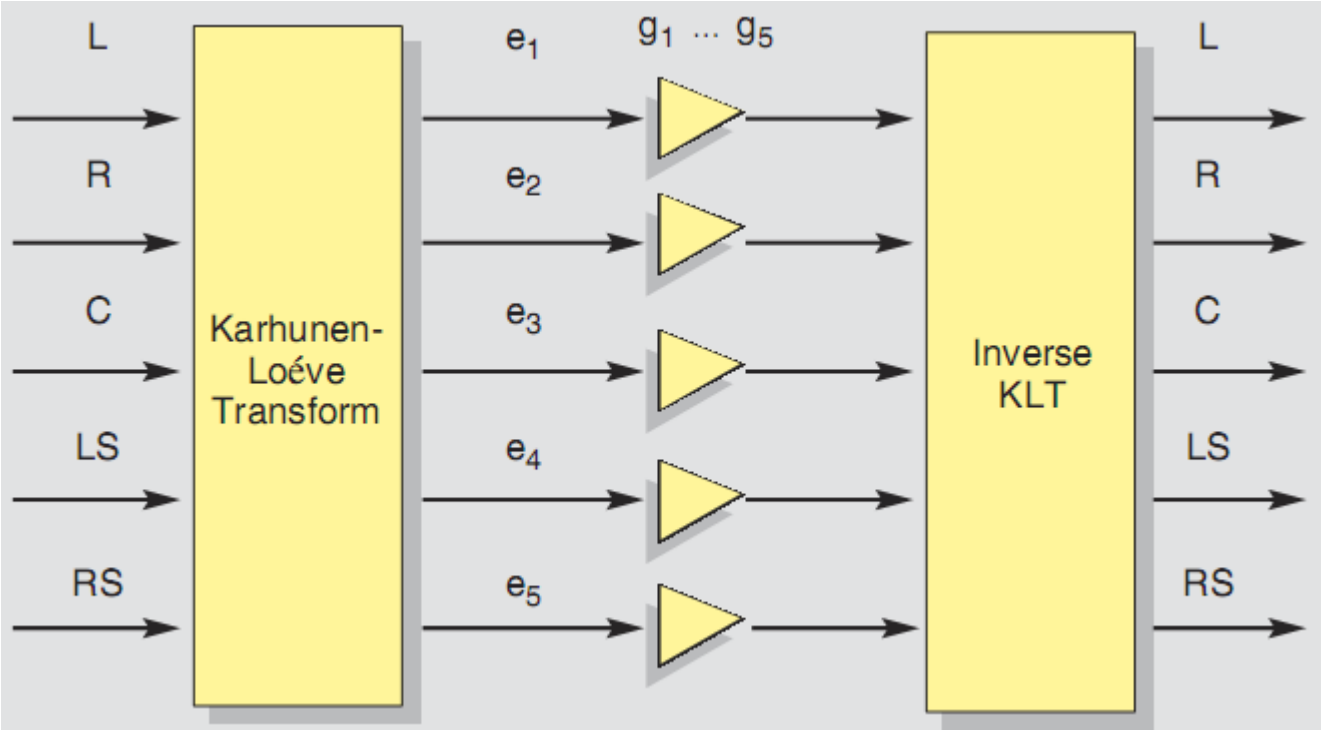

QUESTIONS?

Exam questions

- What is the specific characteristic of lossless compression of the audio signal? Draw and describe a general block diagram of a lossless audio encoder.
- Describe a selected lossless audio compression standard.
- Provide an example of a audio lossy standard with a hybrid bank of filters, draw and describe a block diagram.
- Describe the basic differences between the MPEG1 layer 3 and MPEG2 - AAC encoder.
- Describe the basic differences between the MPEG1 layer 3 and Dolby AC3 encoder.
- Explain the principle of Spectral Band Replication (SBR)
- Explain the principle of Perceptual Noise Substitution (PNS)
- How does the USAC (MPEG-D) encoder differ from AAC (MPEG 2) (list basic differences)
- Describe multi-channel audio encoding options in the MPEG-H 3D audio standard