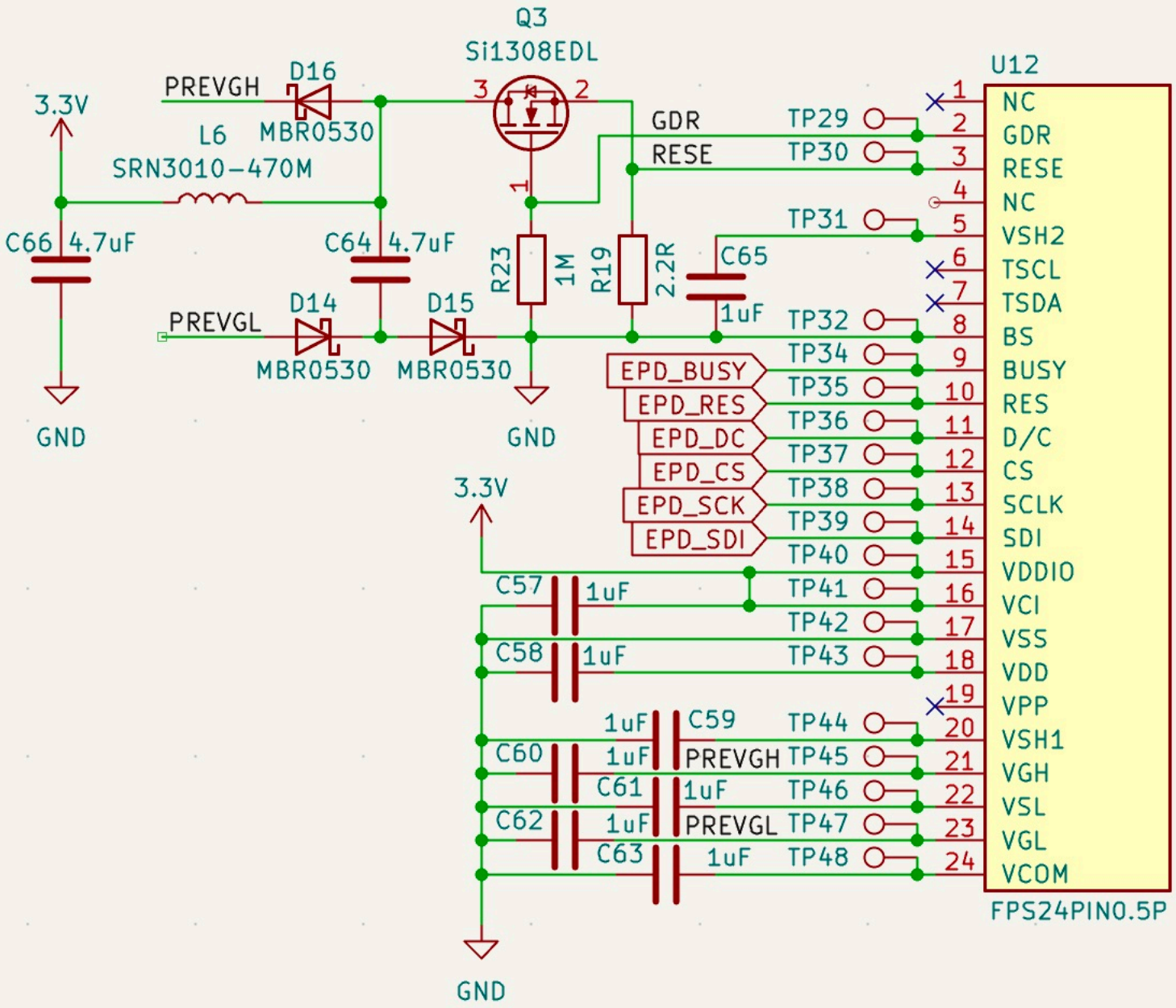E-Paper display