NFC

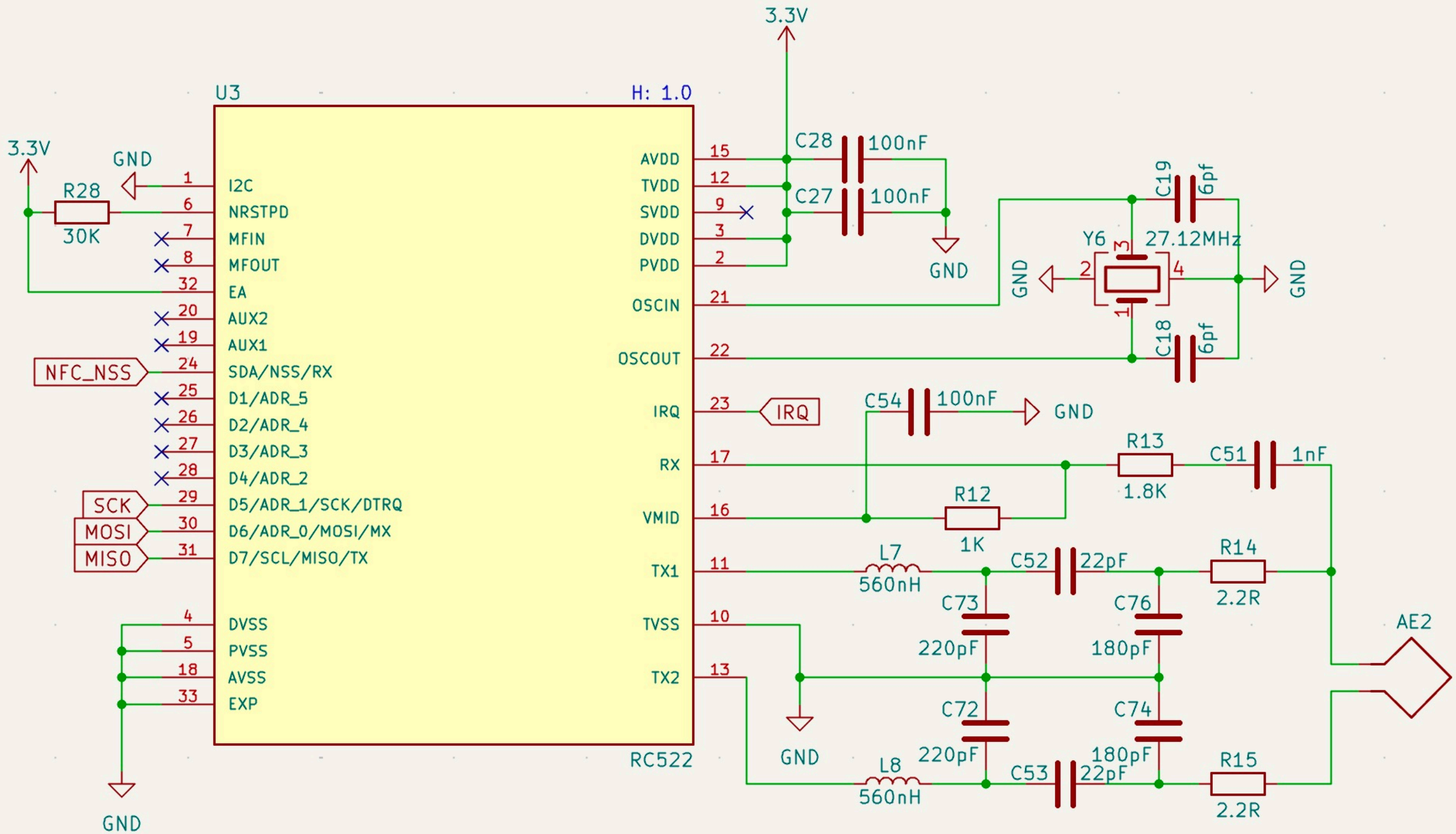
U3
H: 1.0
RC522
3.3V
GND
R28
30K
I2C
NRSTPD
MFIN
MFOUT
EA
AUX2
AUX1
SDA/NSS/RX
D1/ADR_5
D2/ADR_4
D3/ADR_3
D4/ADR_2
D5/ADR_1/SCK/DTRQ
D6/ADR_0/MOSI/MX
D7/SCL/MISO/TX
DVSS
PVSS
AVSS
EXP
NFC_NSS
SCK
MOSI
MISO
AVDD
TVDD
SVDD
DVDD
PVDD
OSCIN
OSCOUT
IRQ
RX
VMID
TX1
TVSS
TX2
C28
100nF
C27
100nF
C19
6pf
C18
6pf
Y6
27.12MHz
C54
100nF
R13
1.8K
C51
1nF
R12
1K
L7
560nH
C52
22pF
R14
2.2R
C73
220pF
C76
180pF
C72
220pF
C74
180pF
L8
560nH
C53
22pF
R15
2.2R
AE2