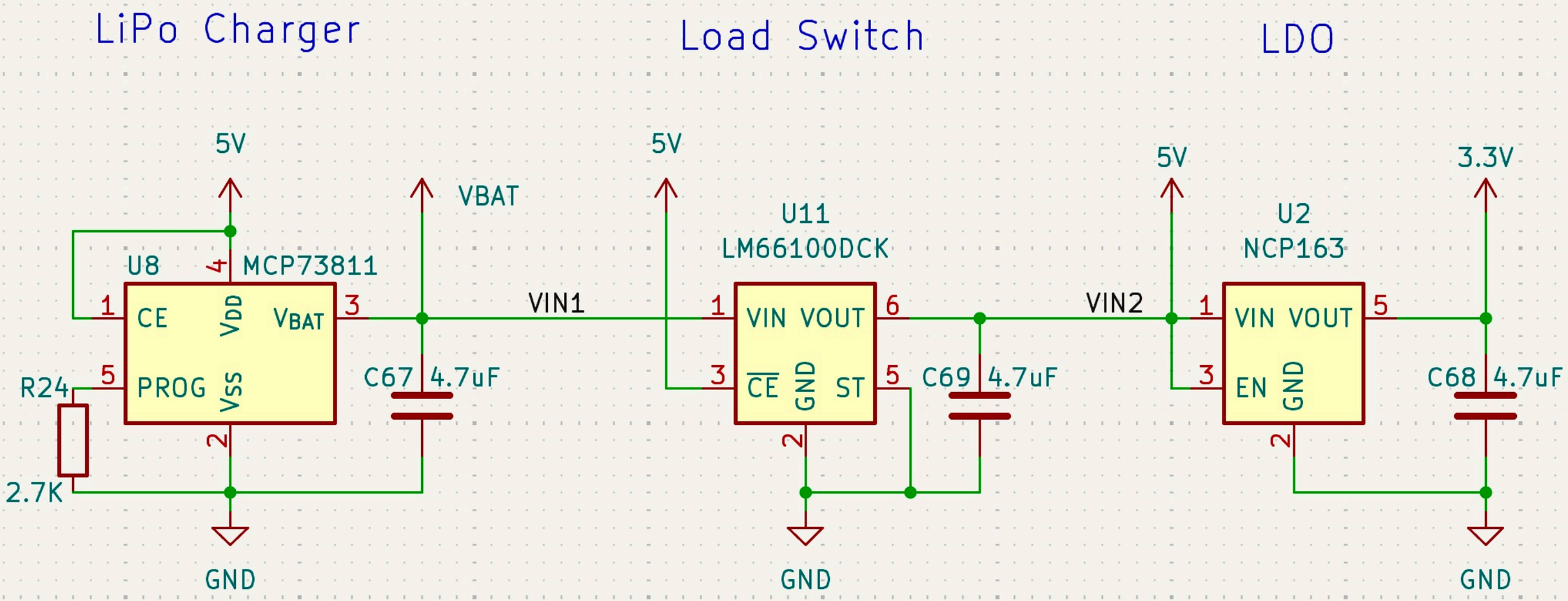
LiPo Charger
Load Switch
LDO
5V
VBAT
5V
5V
3.3V
U8
MCP73811
U11
LM66100DCK
U2
NCP163
CE
VDD
VBAT
PROG
VSS
VIN1
VIN VOUT
CE GND ST
VIN2
VIN VOUT
EN GND
R24
2.7K
C67 4.7uF
C69 4.7uF
C68 4.7uF
GND
GND
GND