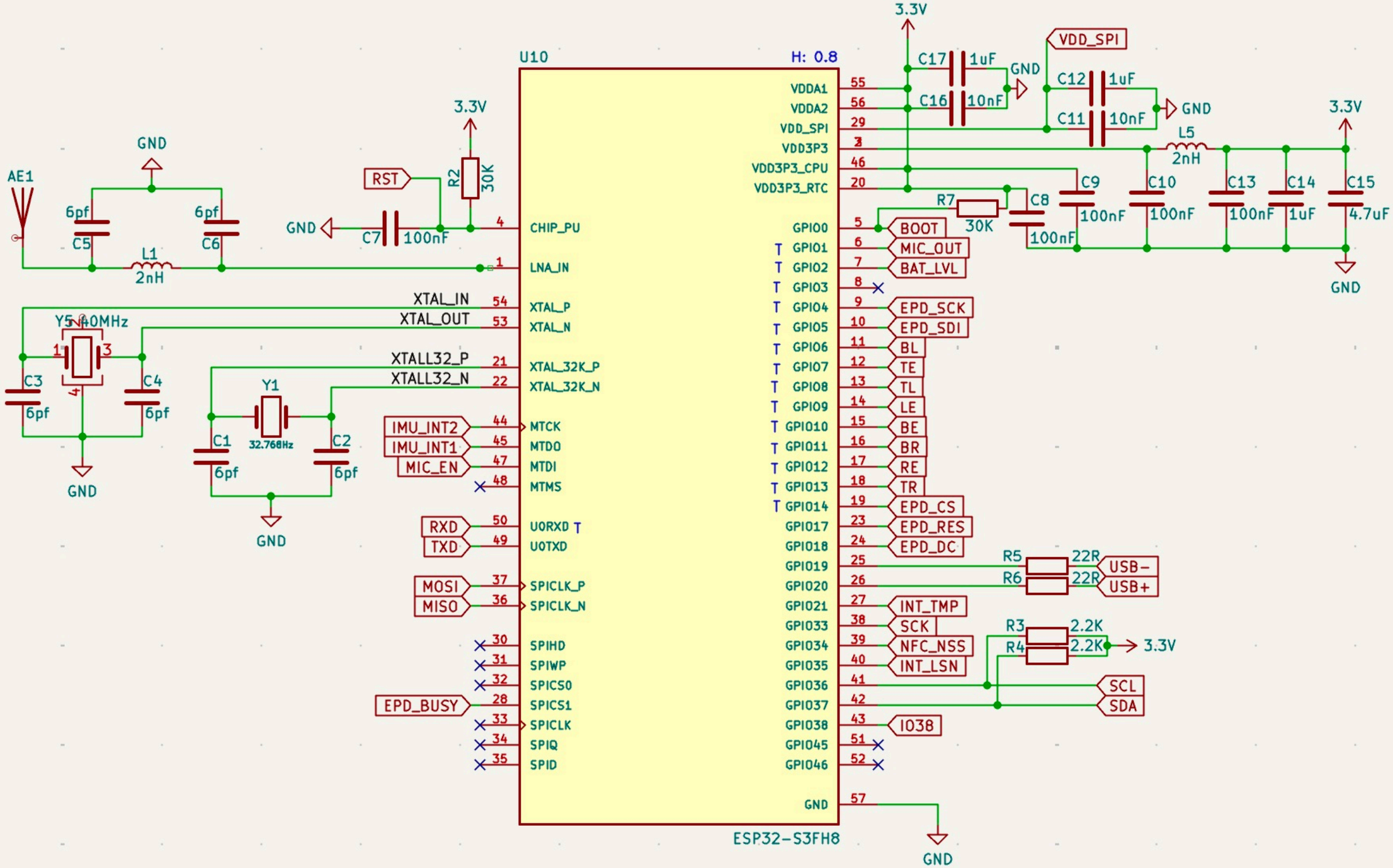
U10
H: 0.8
ESP32-S3FH8
AE1
GND
6pf
C5
6pf
C6
L1
2nH
3.3V
RST
R2
30K
GND
C7
100nF
CHIP_PU
LNA_IN
XTAL_IN
XTAL_OUT
Y5 40MHz
C3
6pf
C4
6pf
XTALL32_P
XTALL32_N
Y1
32.768Hz
C1
6pf
C2
6pf
XTAL_P
XTAL_N
XTAL_32K_P
XTAL_32K_N
IMU_INT2
IMU_INT1
MIC_EN
MTCK
MTDO
MTDI
MTMS
RXD
TXD
U0RXD
U0TXD
MOSI
MISO
SPICLK_P
SPICLK_N
EPD_BUSY
SPIHD
SPIWP
SPICS0
SPICS1
SPICLK
SPIQ
SPID
VDDA1
VDDA2
VDD_SPI
VDD3P3
VDD3P3_CPU
VDD3P3_RTC
GPIO0
GPIO1
GPIO2
GPIO3
GPIO4
GPIO5
GPIO6
GPIO7
GPIO8
GPIO9
GPIO10
GPIO11
GPIO12
GPIO13
GPIO14
GPIO17
GPIO18
GPIO19
GPIO20
GPIO21
GPIO33
GPIO34
GPIO35
GPIO36
GPIO37
GPIO38
GPIO45
GPIO46
GND
3.3V
C17
1uF
C16
10nF
GND
VDD_SPI
C12
1uF
C11
10nF
GND
L5
2nH
3.3V
C9
100nF
C10
100nF
C13
100nF
C14
1uF
C15
4.7uF
GND
R7
30K
C8
100nF
BOOT
MIC_OUT
BAT_LVL
EPD_SCK
EPD_SDI
BL
TE
TL
LE
BE
BR
RE
TR
EPD_CS
EPD_RES
EPD_DC
R5
22R
R6
22R
USB-
USB+
INT_TMP
SCK
NFC_NSS
INT_LSN
R3
2.2K
R4
2.2K
3.3V
SCL
SDA
IO38
GND