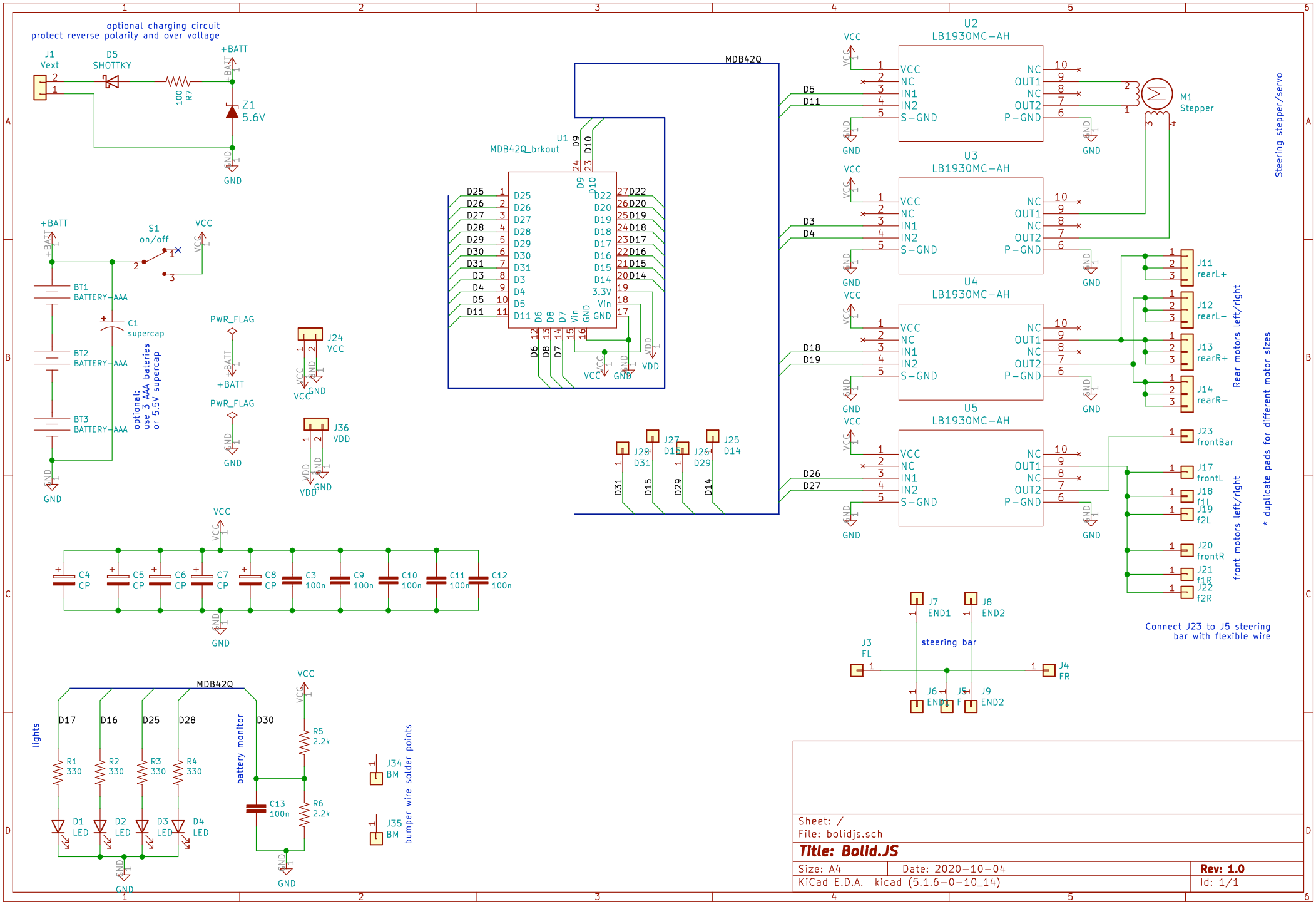

Sheet: /
File: bolidjs.sch

Title: Bolid.JS

Size: A4	Date: 2020-10-04	**Rev: 1.0**
KiCad E.D.A. kicad (5.1.6-0-10_14)		Id: 1/1