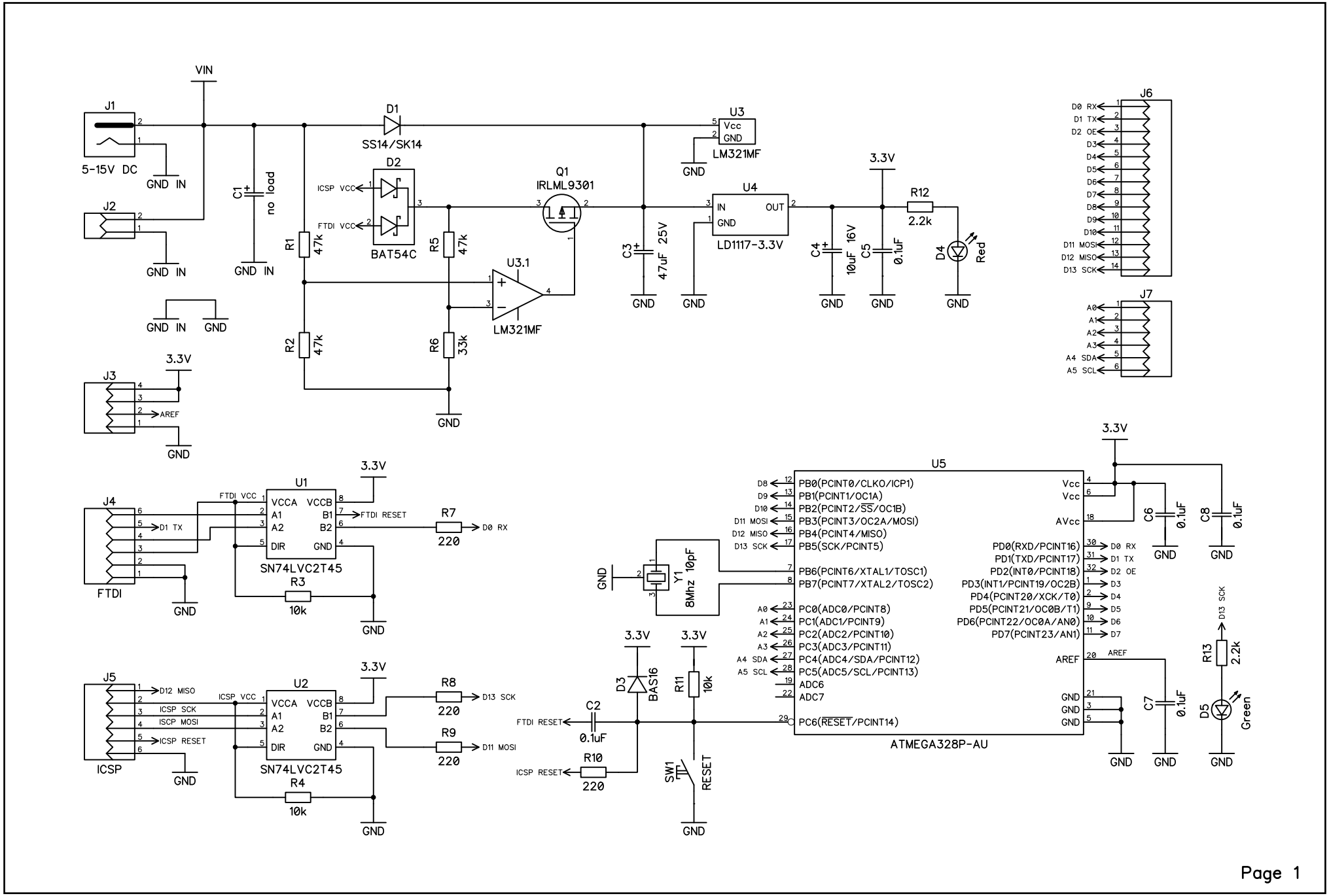

Page 1

ATmega 328P development board with PCA9685 PWM controller
https://github.com/kristspo/ATmega328P_with_PCA9685

Creative Commons Attribution Share Alike 4.0

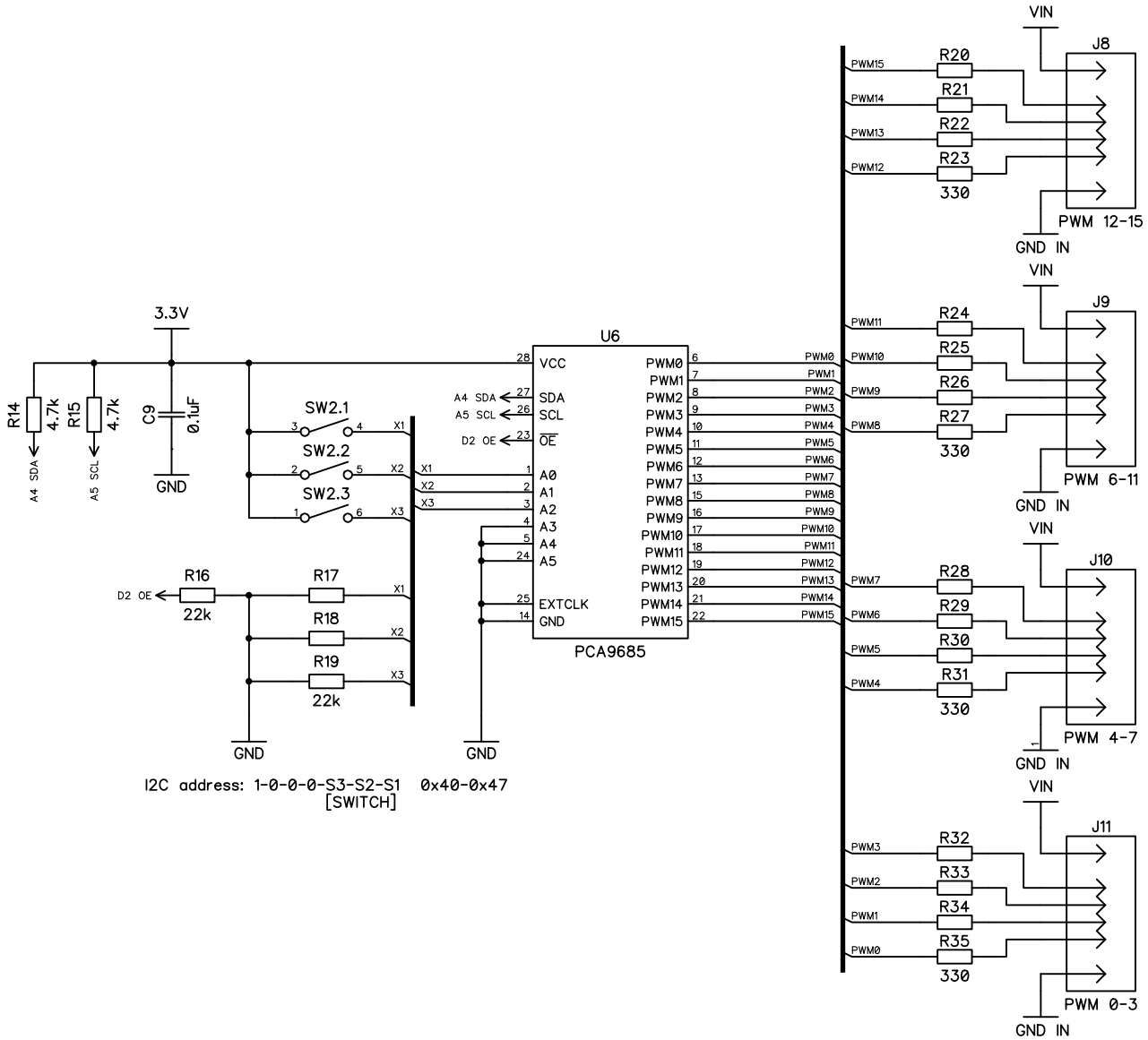

I2C address: 1-0-0-0-S3-S2-S1 0x40-0x47
[SWITCH]

ATmega 328P development board with PCA9685 PWM controller
https://github.com/kristspo/ATmega328P_with_PCA9685

Creative Commons Attribution Share Alike 4.0