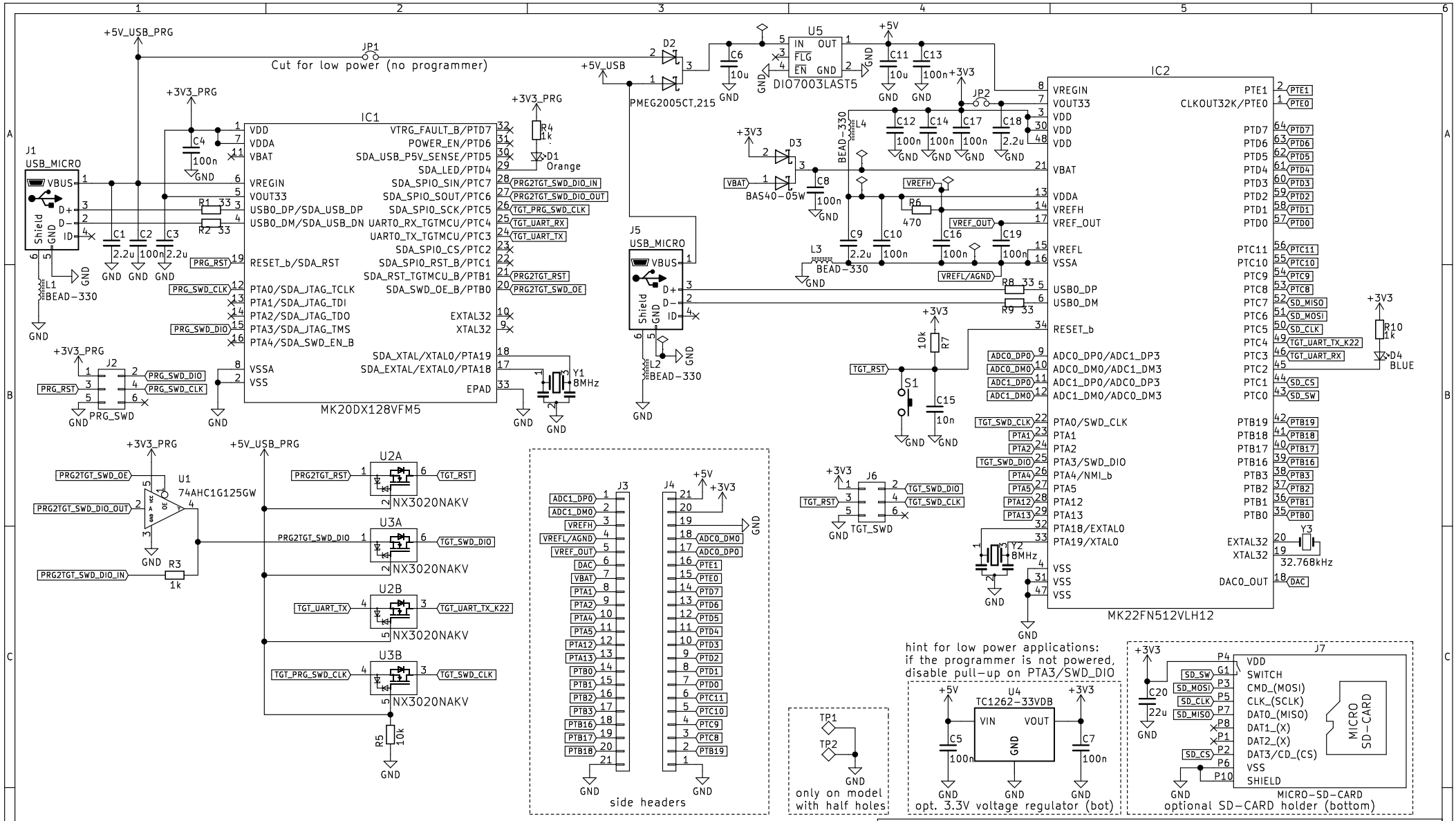


**Hochschule Luzern T&A – CC-Electronics**

Sheet: /
File: TinyK22.sch

***Title: TinyK22***

| | | |
|---|---|---|
| Size: A4 | Date: 2017-07-07 | **Rev: A** |
| KiCad E.D.A. eeschema 4.0.7 | | Id: 1/1 |