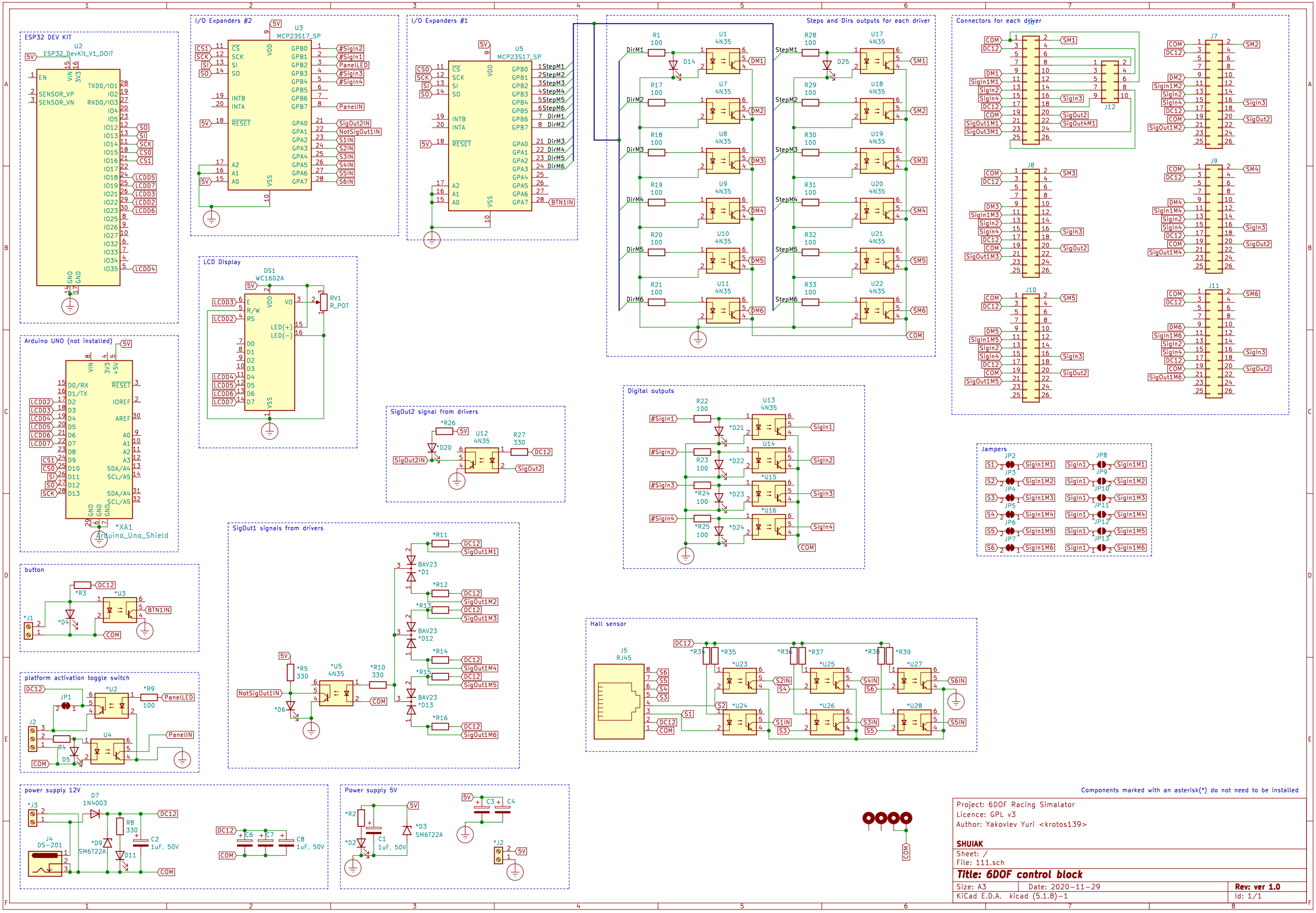
ESP32 DEV KIT
U2
ESP32_DevKit_V1_DOIT
I/O Expanders #2
U3
MCP23S17_SP
I/O Expanders #1
U5
MCP23S17_SP
Steps and Dirs outputs for each driver
Connectors for each driver
LCD Display
DS1
WC1602A
Arduino UNO (not installed)
*XA1
Arduino_Uno_Shield
SigOut2 signal from drivers
Digital outputs
Jampers
button
SigOut1 signals from drivers
Hall sensor
J5
RJ45
platform activation toggle switch
power supply 12V
Power supply 5V
Components marked with an asterisk(*) do not need to be installed
Project: 6DOF Racing Simalator
Licence: GPL v3
Author: Yakovlev Yuri <krotos139>
SHUIAK
Sheet: /
File: 111.sch
Title: 6DOF control block
Size: A3
Date: 2020-11-29
Rev: ver 1.0
KiCad E.D.A. kicad (5.1.8)-1
Id: 1/1