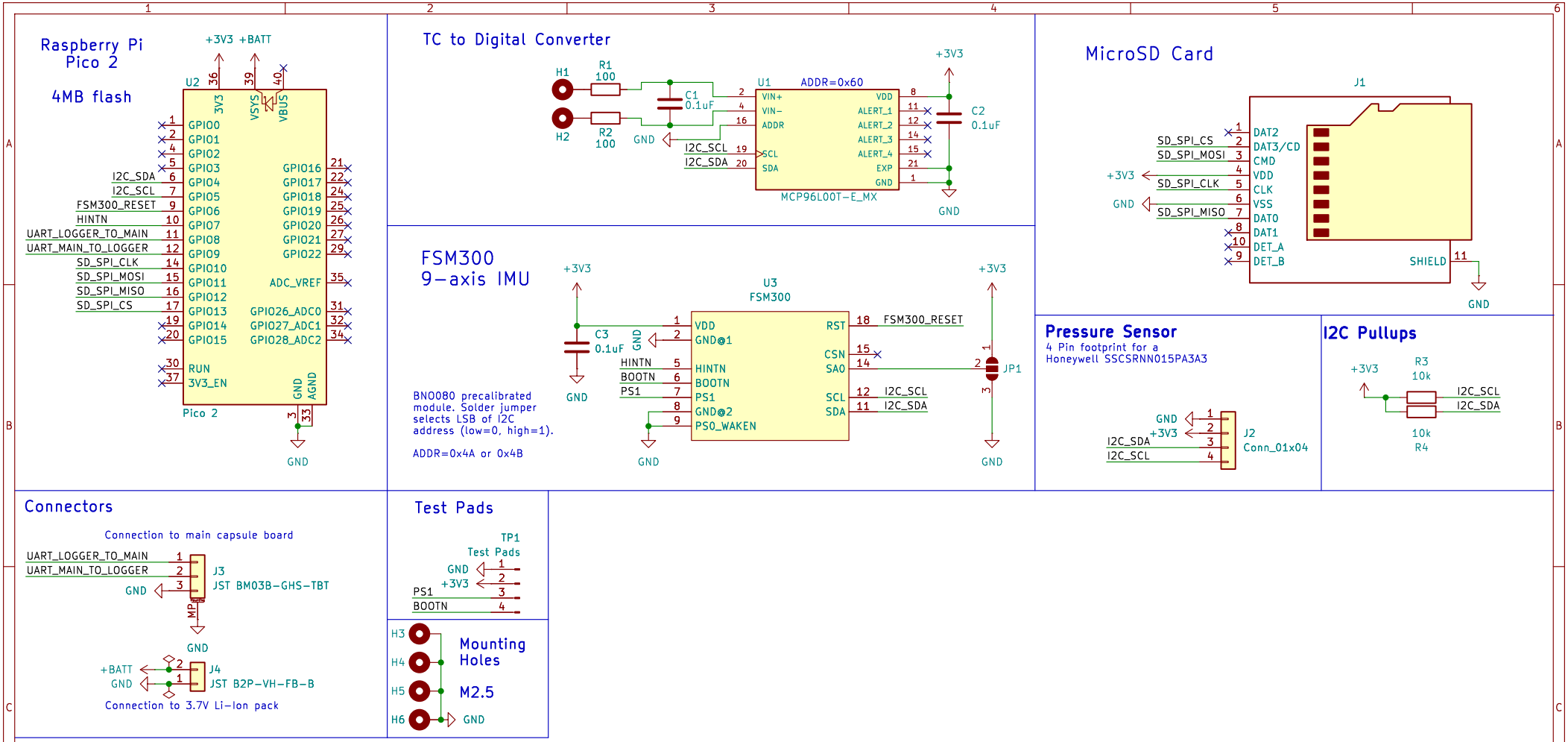

Sheet: /
File: LPDataLogger.kicad_sch

Title: Low Power Data Logger

Size: A4	Date: 2025−04−10	Rev: V1.0
KiCad E.D.A. 9.0.1		Id: 1/1