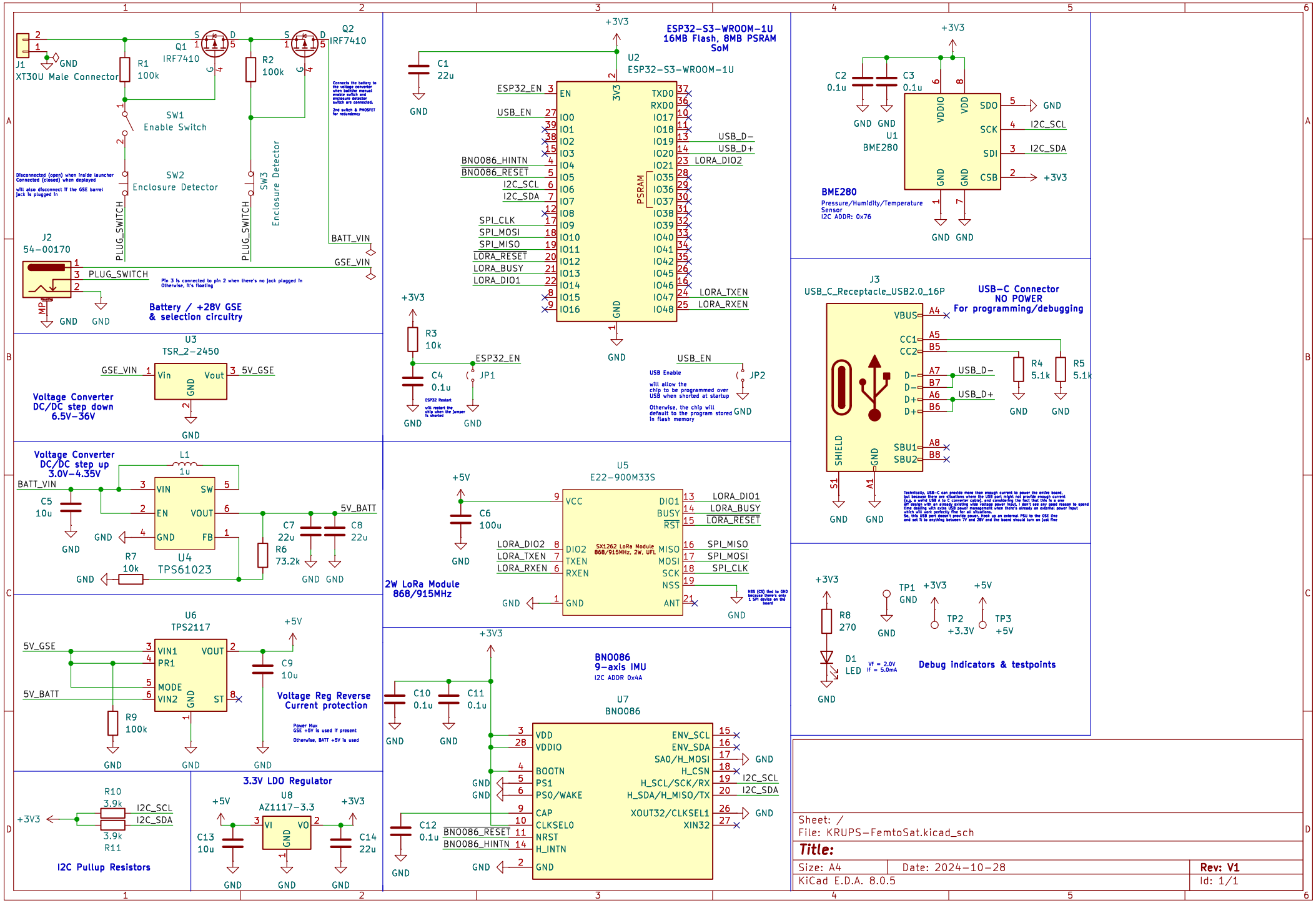
J1
XT30U Male Connector
GND
R1
100k
Q1
IRF7410
R2
100k
Q2
IRF7410
SW1
Enable Switch
SW2
Enclosure Detector
SW3
Enclosure Detector
PLUG_SWITCH
BATT_VIN
GSE_VIN
J2
54-00170
Battery / +28V GSE
& selection circuitry
U3
TSR_2-2450
GSE_VIN
Vin
Vout
5V_GSE
Voltage Converter
DC/DC step down
6.5V-36V
Voltage Converter
DC/DC step up
3.0V-4.35V
L1
1u
BATT_VIN
C5
10u
VIN
SW
EN
VOUT
GND
FB
U4
TPS61023
R7
10k
R6
73.2k
C7
22u
C8
22u
5V_BATT
U6
TPS2117
5V_GSE
5V_BATT
VIN1
PR1
MODE
VIN2
VOUT
ST
+5V
C9
10u
R9
100k
Voltage Reg Reverse
Current protection
R10
3.9k
R11
3.9k
+3V3
I2C_SCL
I2C_SDA
I2C Pullup Resistors
3.3V LDO Regulator
U8
AZ1117-3.3
VI
VO
C13
10u
C14
22u
ESP32-S3-WROOM-1U
16MB Flash, 8MB PSRAM
SoM
U2
ESP32-S3-WROOM-1U
C1
22u
EN
3V3
IO0
IO1
IO2
IO3
IO4
IO5
IO6
IO7
IO8
IO9
IO10
IO11
IO12
IO13
IO14
IO15
IO16
TXD0
RXD0
IO17
IO18
IO19
IO20
IO21
IO35
IO36
IO37
IO38
IO39
IO40
IO41
IO42
IO45
IO46
IO47
IO48
PSRAM
ESP32_EN
USB_EN
BNO086_HINTN
BNO086_RESET
I2C_SCL
I2C_SDA
SPI_CLK
SPI_MOSI
SPI_MISO
LORA_RESET
LORA_BUSY
LORA_DIO1
USB_D-
USB_D+
LORA_DIO2
LORA_TXEN
LORA_RXEN
R3
10k
C4
0.1u
JP1
JP2
ESP32 Restart
will restart the chip when the jumper is shorted
USB Enable
will allow the chip to be programmed over USB when shorted at startup
Otherwise, the chip will default to the program stored in flash memory
U5
E22-900M33S
VCC
DIO2
TXEN
RXEN
DIO1
BUSY
RST
MISO
MOSI
SCK
NSS
ANT
SX1262 Module
868/915MHz, 2W, UFL
C6
100u
2W LoRa Module
868/915MHz
NSS (CS) tied to GND because there's only 1 SPI device on the board
BNO086
9-axis IMU
I2C ADDR 0x4A
U7
BNO086
C10
0.1u
C11
0.1u
C12
0.1u
VDD
VDDIO
BOOTN
PS1
PS0/WAKE
CAP
CLKSEL0
NRST
H_INTN
ENV_SCL
ENV_SDA
SA0/H_MOSI
H_CSN
H_SCL/SCK/RX
H_SDA/H_MISO/TX
XOUT32/CLKSEL1
XIN32
BME280
Pressure/Humidity/Temperature
Sensor
I2C ADDR: 0x76
U1
BME280
C2
0.1u
C3
0.1u
VDDIO
VDD
SDO
SCK
SDI
CSB
J3
USB_C_Receptacle_USB2.0_16P
USB-C Connector
NO POWER
For programming/debugging
VBUS
CC1
CC2
D-
D+
SHIELD
SBU1
SBU2
R4
5.1k
R5
5.1k
Technically, USB-C can provide more than enough current to power the entire board, but because there are situations where the USB port might not provide enough current (e.g. a weird USB A to C converter cable), and considering the fact that this is a one off design with an already existing wide voltage power input, I don't see any good reason to spend time dealing with extra USB power management when there's already an external power input which will work perfectly fine for all situations.
So, this USB port doesn't provide power. Hook up an external PSU to the GSE line and set it to anything between 7V and 28V and the board should turn on just fine
R8
270
D1
LED
Vf = 2.0V
If = 5.0mA
TP1
TP2
+3.3V
TP3
Debug indicators & testpoints
Sheet: /
File: KRUPS-FemtoSat.kicad_sch
Title:
Size: A4
Date: 2024-10-28
Rev: V1
KiCad E.D.A. 8.0.5
Id: 1/1