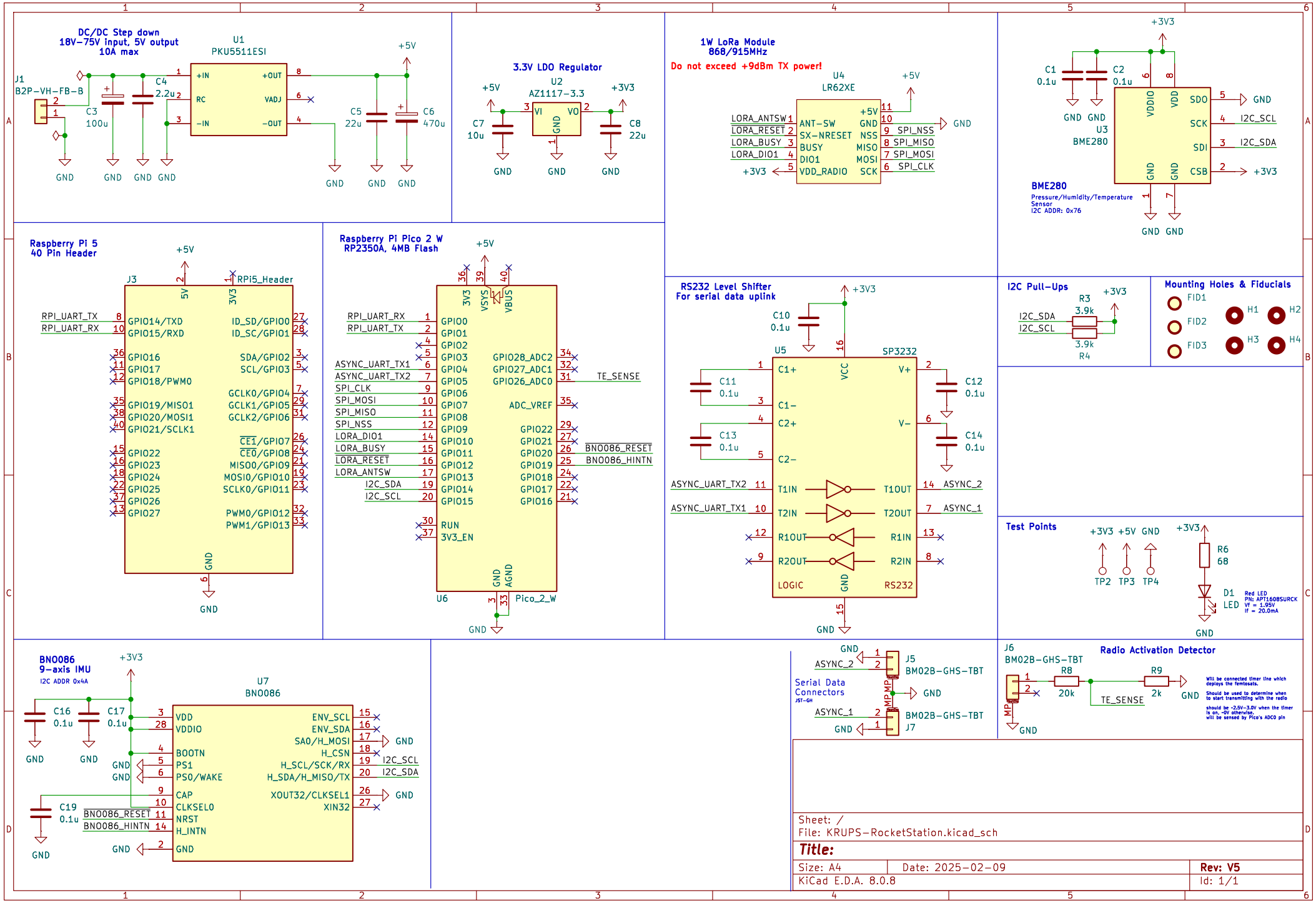
DC/DC Step down
18V–75V input, 5V output
10A max
U1
PKU5511ESI
J1
B2P-VH-FB-B
C3
100u
C4
2.2u
+IN
RC
–IN
+OUT
VADJ
–OUT
C5
22u
C6
470u
+5V
GND
3.3V LDO Regulator
U2
AZ1117-3.3
VI
VO
GND
C7
10u
C8
22u
+3V3
1W LoRa Module
868/915MHz
Do not exceed +9dBm TX power!
U4
LR62XE
LORA_ANTSW
LORA_RESET
LORA_BUSY
LORA_DIO1
+3V3
ANT–SW
SX–NRESET
BUSY
DIO1
VDD_RADIO
+5V
GND
NSS
MISO
MOSI
SCK
SPI_NSS
SPI_MISO
SPI_MOSI
SPI_CLK
C1
0.1u
C2
0.1u
U3
BME280
VDDIO
VDD
SDO
SCK
SDI
CSB
I2C_SCL
I2C_SDA
BME280
Pressure/Humidity/Temperature Sensor
I2C ADDR: 0x76
Raspberry Pi 5
40 Pin Header
J3
RPi5_Header
5V
3V3
RPI_UART_TX
RPI_UART_RX
GPIO14/TXD
GPIO15/RXD
GPIO16
GPIO17
GPIO18/PWM0
GPIO19/MISO1
GPIO20/MOSI1
GPIO21/SCLK1
GPIO22
GPIO23
GPIO24
GPIO25
GPIO26
GPIO27
ID_SD/GPIO0
ID_SC/GPIO1
SDA/GPIO2
SCL/GPIO3
GCLK0/GPIO4
GCLK1/GPIO5
GCLK2/GPIO6
CE1/GPIO7
CE0/GPIO8
MISO0/GPIO9
MOSI0/GPIO10
SCLK0/GPIO11
PWM0/GPIO12
PWM1/GPIO13
Raspberry Pi Pico 2 W
RP2350A, 4MB Flash
U6
Pico_2_W
VSYS
VBUS
AGND
RUN
3V3_EN
ASYNC_UART_TX1
ASYNC_UART_TX2
SPI_CLK
SPI_MOSI
SPI_MISO
SPI_NSS
LORA_DIO1
LORA_BUSY
LORA_RESET
LORA_ANTSW
I2C_SDA
I2C_SCL
GPIO28_ADC2
GPIO27_ADC1
GPIO26_ADC0
ADC_VREF
TE_SENSE
BNO086_RESET
BNO086_HINTN
RS232 Level Shifter
For serial data uplink
U5
SP3232
C10
0.1u
C11
0.1u
C12
0.1u
C13
0.1u
C14
0.1u
VCC
C1+
C1–
C2+
C2–
V+
V–
T1IN
T2IN
R1OUT
R2OUT
T1OUT
T2OUT
R1IN
R2IN
LOGIC
RS232
ASYNC_UART_TX2
ASYNC_UART_TX1
ASYNC_2
ASYNC_1
I2C Pull-Ups
R3
3.9k
R4
3.9k
Mounting Holes & Fiducials
FID1
FID2
FID3
H1
H2
H3
H4
Test Points
TP2
TP3
TP4
R6
68
D1
LED
Red LED
PN: APT1608SURCK
Vf = 1.95V
If = 20.0mA
BNO086
9-axis IMU
I2C ADDR 0x4A
U7
BNO086
C16
0.1u
C17
0.1u
C19
0.1u
VDD
VDDIO
BOOTN
PS1
PS0/WAKE
CAP
CLKSEL0
NRST
H_INTN
ENV_SCL
ENV_SDA
SA0/H_MOSI
H_CSN
H_SCL/SCK/RX
H_SDA/H_MISO/TX
XOUT32/CLKSEL1
XIN32
Serial Data Connectors
JST-GH
J5
BM02B-GHS-TBT
J7
BM02B-GHS-TBT
J6
BM02B-GHS-TBT
Radio Activation Detector
R8
20k
R9
2k
TE_SENSE
Will be connected timer line which deploys the femtosats.
Should be used to determine when to start transmitting with the radio
should be ~2.5V–3.0V when the timer is on, ~0V otherwise.
will be sensed by Pico's ADC0 pin
Sheet: /
File: KRUPS–RocketStation.kicad_sch
Title:
Size: A4
Date: 2025–02–09
Rev: V5
KiCad E.D.A. 8.0.8
Id: 1/1