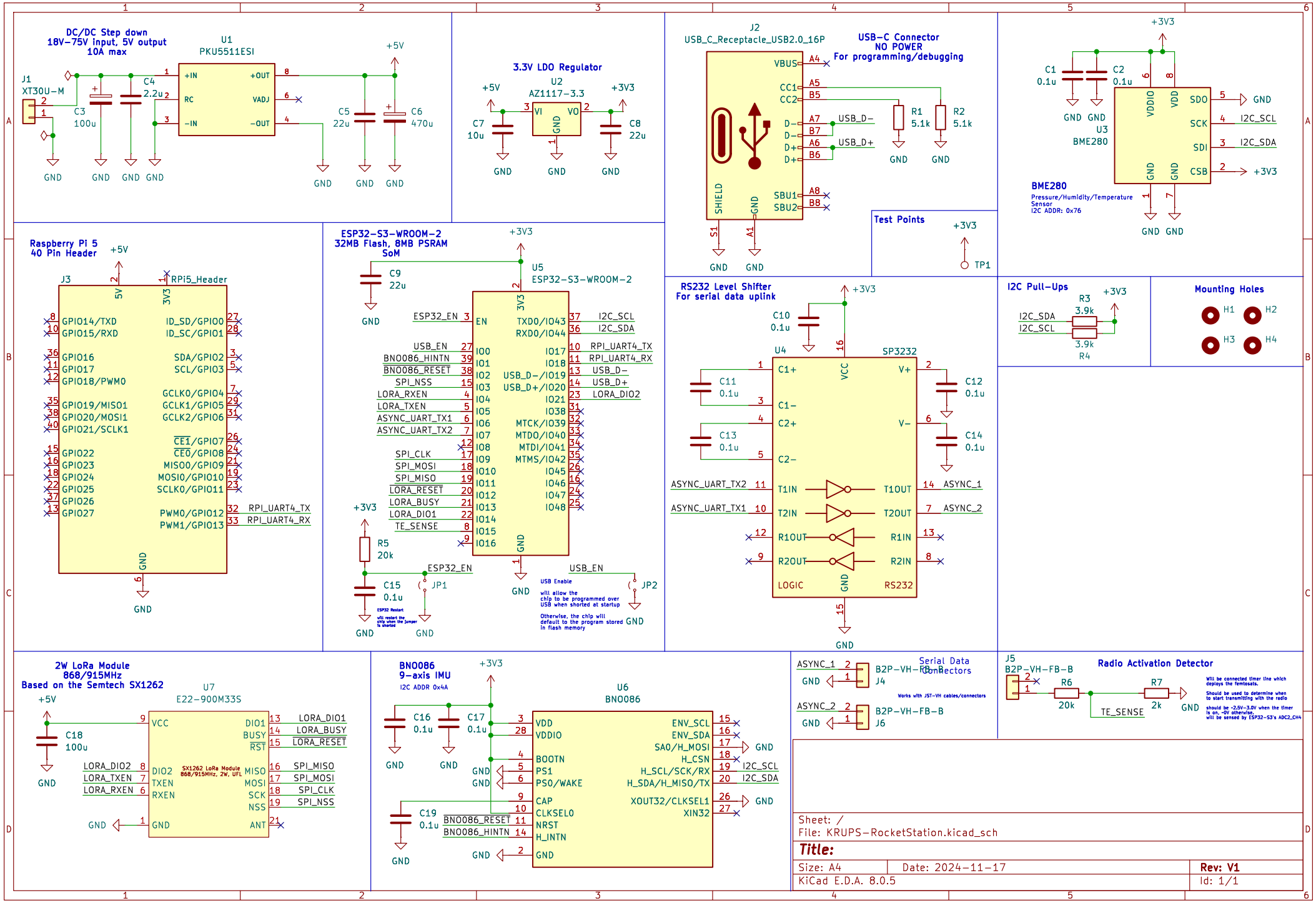
DC/DC Step down
18V–75V input, 5V output
10A max
U1
PKU5511ESI
J1
XT30U-M
C3
100u
C4
2.2u
C5
22u
C6
470u
+5V
3.3V LDO Regulator
U2
AZ1117-3.3
C7
10u
C8
22u
+3V3
J2
USB_C_Receptacle_USB2.0_16P
USB-C Connector
NO POWER
For programming/debugging
R1
5.1k
R2
5.1k
USB_D-
USB_D+
Test Points
TP1
U3
BME280
BME280
Pressure/Humidity/Temperature Sensor
I2C ADDR: 0x76
I2C_SCL
I2C_SDA
Raspberry Pi 5
40 Pin Header
J3
RPi5_Header
ESP32-S3-WROOM-2
32MB Flash, 8MB PSRAM
SoM
U5
ESP32-S3-WROOM-2
C9
22u
ESP32_EN
USB_EN
RPI_UART4_TX
RPI_UART4_RX
LORA_DIO2
LORA_RXEN
LORA_TXEN
ASYNC_UART_TX1
ASYNC_UART_TX2
SPI_CLK
SPI_MOSI
SPI_MISO
LORA_RESET
LORA_BUSY
LORA_DIO1
TE_SENSE
R5
20k
C15
0.1u
JP1
JP2
ESP32 Restart
will restart the chip when the jumper is shorted
USB Enable
will allow the chip to be programmed over USB when shorted at startup
Otherwise, the chip will default to the program stored in flash memory
RS232 Level Shifter
For serial data uplink
U4
SP3232
C10
0.1u
C11
0.1u
C12
0.1u
C13
0.1u
C14
0.1u
ASYNC_1
ASYNC_2
I2C Pull-Ups
R3
3.9k
R4
3.9k
Mounting Holes
H1
H2
H3
H4
2W LoRa Module
868/915MHz
Based on the Semtech SX1262
U7
E22-900M33S
C18
100u
SX1262 LoRa Module
868/915MHz, 2W, UFL
LORA_DIO1
LORA_BUSY
LORA_RESET
SPI_MISO
SPI_MOSI
SPI_CLK
SPI_NSS
BNO086
9-axis IMU
I2C ADDR 0x4A
U6
BNO086
C16
0.1u
C17
0.1u
C19
0.1u
BNO086_RESET
BNO086_HINTN
Serial Data Connectors
B2P-VH-FB-B
J4
J6
Works with JST-VH cables/connectors
J5
B2P-VH-FB-B
Radio Activation Detector
R6
20k
R7
2k
TE_SENSE
Will be connected timer line which deploys the femtosats.
Should be used to determine when to start transmitting with the radio
should be ~2.5V–3.0V when the timer is on, ~0V otherwise, will be sensed by ESP32-S3's ADC2_CH4
Sheet: /
File: KRUPS-RocketStation.kicad_sch
Title:
Size: A4
Date: 2024-11-17
Rev: V1
KiCad E.D.A. 8.0.5
Id: 1/1