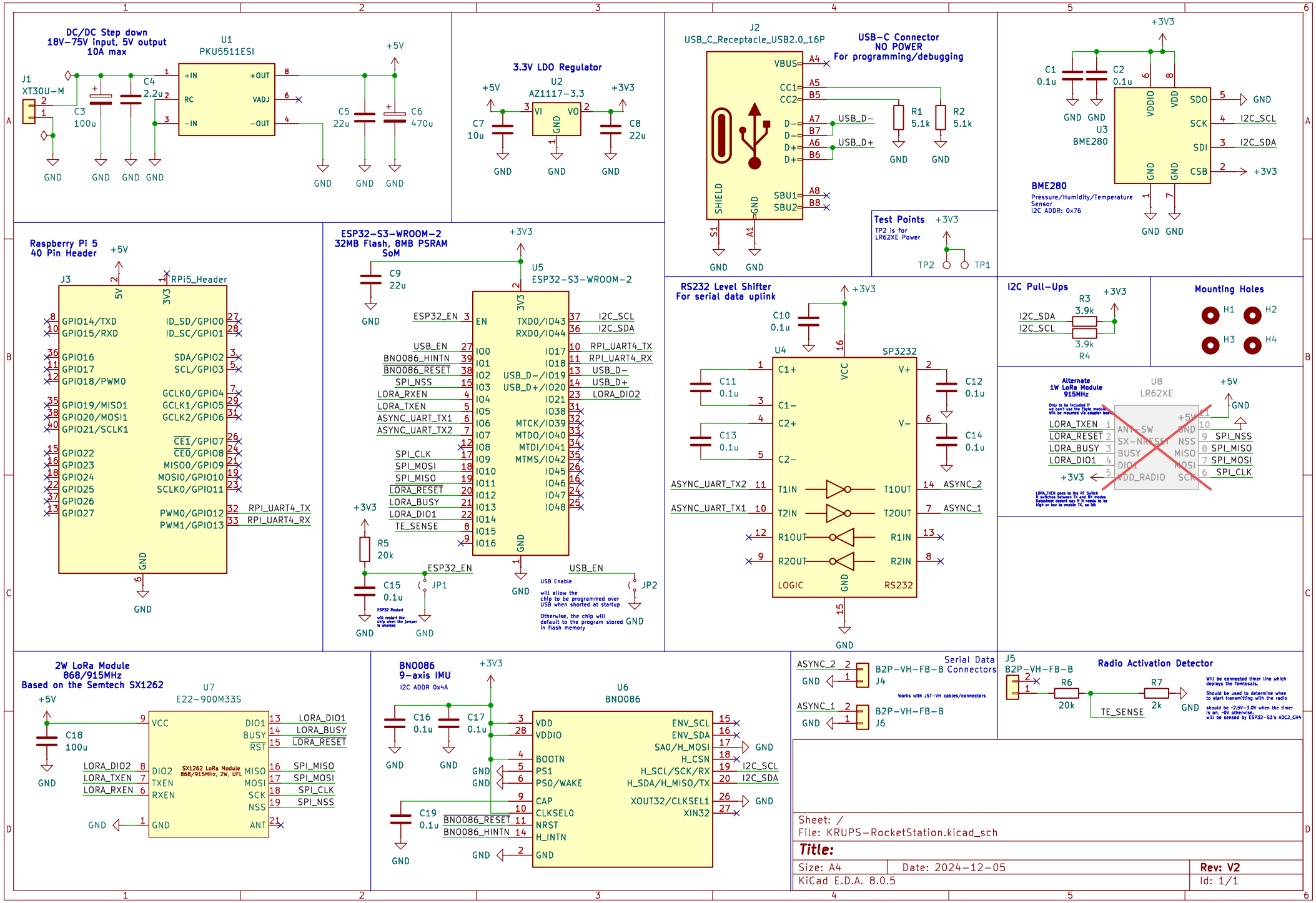
DC/DC Step down
18V–75V input, 5V output
10A max
U1
PKU5511ESI
J1
XT30U–M
C3
100u
C4
2.2u
C5
22u
C6
470u
+5V
3.3V LDO Regulator
U2
AZ1117–3.3
C7
10u
C8
22u
+3V3
J2
USB_C_Receptacle_USB2.0_16P
USB–C Connector
NO POWER
For programming/debugging
R1
5.1k
R2
5.1k
USB_D–
USB_D+
Test Points
TP2 is for
LR62XE Power
TP2
TP1
C1
0.1u
C2
0.1u
U3
BME280
BME280
Pressure/Humidity/Temperature
Sensor
I2C ADDR: 0x76
I2C_SCL
I2C_SDA
Raspberry Pi 5
40 Pin Header
J3
RPi5_Header
ESP32–S3–WROOM–2
32MB Flash, 8MB PSRAM
SoM
U5
ESP32–S3–WROOM–2
C9
22u
ESP32_EN
USB_EN
BNO086_HINTN
BNO086_RESET
SPI_NSS
LORA_RXEN
LORA_TXEN
ASYNC_UART_TX1
ASYNC_UART_TX2
SPI_CLK
SPI_MOSI
SPI_MISO
LORA_RESET
LORA_BUSY
LORA_DIO1
TE_SENSE
RPI_UART4_TX
RPI_UART4_RX
LORA_DIO2
R5
20k
C15
0.1u
JP1
JP2
USB Enable
will allow the
chip to be programmed over
USB when shorted at startup
Otherwise, the chip will
default to the program stored
in flash memory
ESP32 Restart
will restart the
chip when the jumper
is shorted
RS232 Level Shifter
For serial data uplink
U4
SP3232
C10
0.1u
C11
0.1u
C12
0.1u
C13
0.1u
C14
0.1u
ASYNC_2
ASYNC_1
I2C Pull–Ups
R3
3.9k
R4
3.9k
Mounting Holes
H1
H2
H3
H4
Alternate
1W LoRa Module
915MHz
U8
LR62XE
Only to be Included if
we can't use the Ebyte module
Will be mounted via adapter board
LORA_TXEN goes to the RF Switch
It switches between TX and RX modes
Datasheet doesn't say if it needs to be
high or low to enable TX, so NA
2W LoRa Module
868/915MHz
Based on the Semtech SX1262
U7
E22–900M33S
C18
100u
SX1262 LoRa Module
868/915MHz, 2W, UFL
BNO086
9–axis IMU
I2C ADDR 0x4A
U6
BNO086
C16
0.1u
C17
0.1u
C19
0.1u
Serial Data
B2P–VH–FB–B Connectors
J4
J6
Works with JST–VH cables/connectors
J5
B2P–VH–FB–B
Radio Activation Detector
R6
20k
R7
2k
Will be connected timer line which
deploys the femtosats.
Should be used to determine when
to start transmitting with the radio
should be ~2.5V–3.0V when the timer
is on, ~0V otherwise,
will be sensed by ESP32–S3's ADC2_CH4
Sheet: /
File: KRUPS–RocketStation.kicad_sch
Title:
Size: A4
Date: 2024–12–05
Rev: V2
KiCad E.D.A. 8.0.5
Id: 1/1