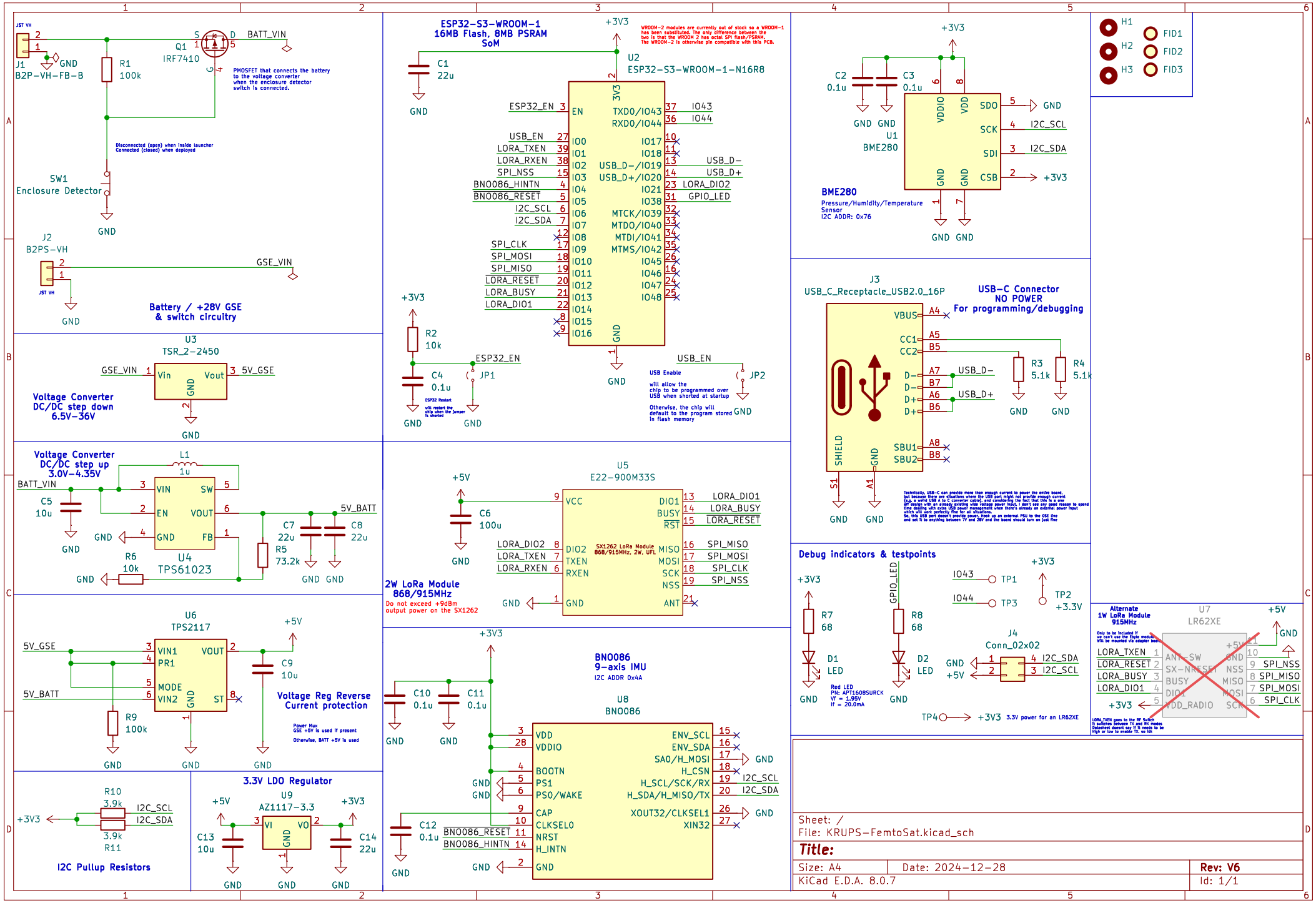
Battery / +28V GSE & switch circuitry
J1 B2P-VH-FB-B
Q1 IRF7410
BATT_VIN
R1 100k
PMOSFET that connects the battery to the voltage converter when the enclosure detector switch is connected.
Disconnected (open) when inside launcher
Connected (closed) when deployed
SW1 Enclosure Detector
J2 B2PS-VH
GSE_VIN
ESP32-S3-WROOM-1 16MB Flash, 8MB PSRAM SoM
U2 ESP32-S3-WROOM-1-N16R8
WROOM-2 modules are currently out of stock so a WROOM-1 has been substituted. The only difference between the two is that the WROOM 2 has octal SPI flash/PSRAM. The WROOM-2 is otherwise pin compatible with this PCB.
C1 22u
ESP32_EN
USB_EN
LORA_TXEN
LORA_RXEN
SPI_NSS
BNO086_HINTN
BNO086_RESET
I2C_SCL
I2C_SDA
SPI_CLK
SPI_MOSI
SPI_MISO
LORA_RESET
LORA_BUSY
LORA_DIO1
LORA_DIO2
GPIO_LED
USB_D-
USB_D+
R2 10k
C4 0.1u
JP1
JP2
ESP32 Restart will restart the chip when the jumper is shorted
USB Enable will allow the chip to be programmed over USB when shorted at startup
Otherwise, the chip will default to the program stored in flash memory
U3 TSR_2-2450
Voltage Converter DC/DC step down 6.5V-36V
5V_GSE
Voltage Converter DC/DC step up 3.0V-4.35V
U4 TPS61023
L1 1u
C5 10u
R6 10k
R5 73.2k
C7 22u
C8 22u
5V_BATT
U5 E22-900M33S
2W LoRa Module 868/915MHz
Do not exceed +9dBm output power on the SX1262
SX1262 LoRa Module 868/915MHz, 2W, UFL
C6 100u
U6 TPS2117
Voltage Reg Reverse Current protection
Power Mux: GSE +5V is used if present
Otherwise, BATT +5V is used
C9 10u
R9 100k
BNO086 9-axis IMU
I2C ADDR 0x4A
U8 BNO086
C10 0.1u
C11 0.1u
C12 0.1u
R10 3.9k
R11 3.9k
I2C Pullup Resistors
3.3V LDO Regulator
U9 AZ1117-3.3
C13 10u
C14 22u
U1 BME280
BME280 Pressure/Humidity/Temperature Sensor I2C ADDR: 0x76
C2 0.1u
C3 0.1u
J3 USB_C_Receptacle_USB2.0_16P
USB-C Connector NO POWER For programming/debugging
R3 5.1k
R4 5.1k
Technically, USB-C can provide more than enough current to power the entire board, but because there are situations where the USB port might not provide enough current (e.g. a weird USB A to C converter cable), and considering the fact that this is a one off design with an already existing wide voltage power input, I don't see any good reason to spend time dealing with extra USB power management when there's already an external power input which will work perfectly fine for all situations.
So, this USB port doesn't provide power. Hook up an external PSU to the GSE line and set it to anything between 7V and 28V and the board should turn on just fine
Debug indicators & testpoints
R7 68
D1 LED
Red LED PN: APT1608SURCK Vf = 1.95V If = 20.0mA
R8 68
D2 LED
TP1
TP2 +3.3V
TP3
TP4 +3V3 3.3V power for an LR62XE
J4 Conn_02x02
H1
H2
H3
FID1
FID2
FID3
Alternate 1W LoRa Module 915MHz
U7 LR62XE
Only to be included if we can't use the Ebyte module, will be mounted via adapter board
LORA_TXEN goes to the RF Switch is switched between TX and RX modes. Datasheet doesn't say if it needs to be high or low to enable TX, so idk
Sheet: /
File: KRUPS-FemtoSat.kicad_sch
Title:
Size: A4
Date: 2024-12-28
Rev: V6
KiCad E.D.A. 8.0.7
Id: 1/1