PROJECT PROPOSAL

Self-Balancing Cube Robot

A cube that defies gravity and teaches you control theory

Submitted for: ODT Final Assignment
Team: [Krushna Jain & Khyatispriha Hazarika] Date: 05 April 2026

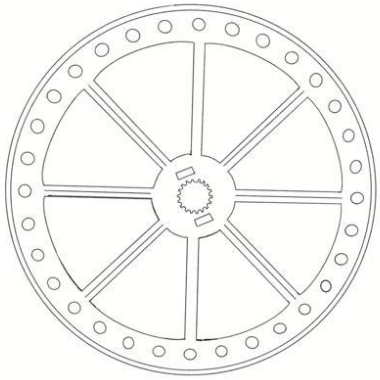

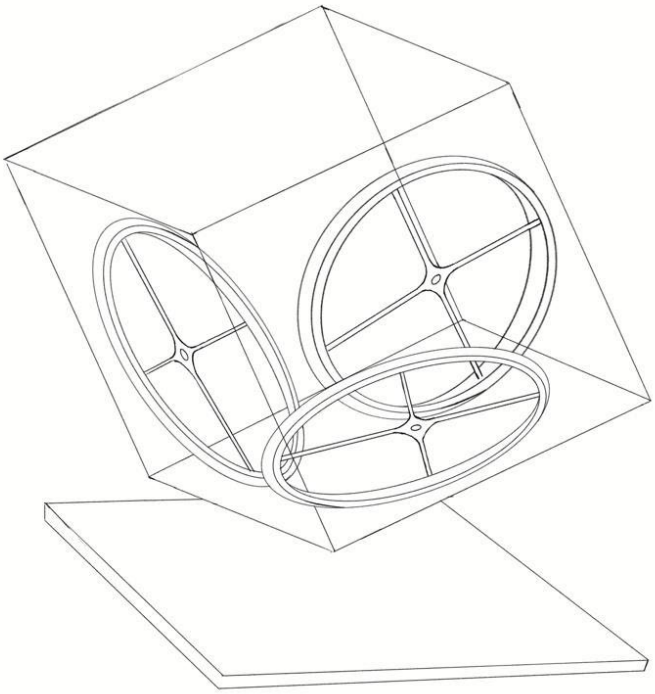

A small, 3D-printed cube that can balance on a single corner all by itself using spinning wheels inside it and a smart control algorithm.

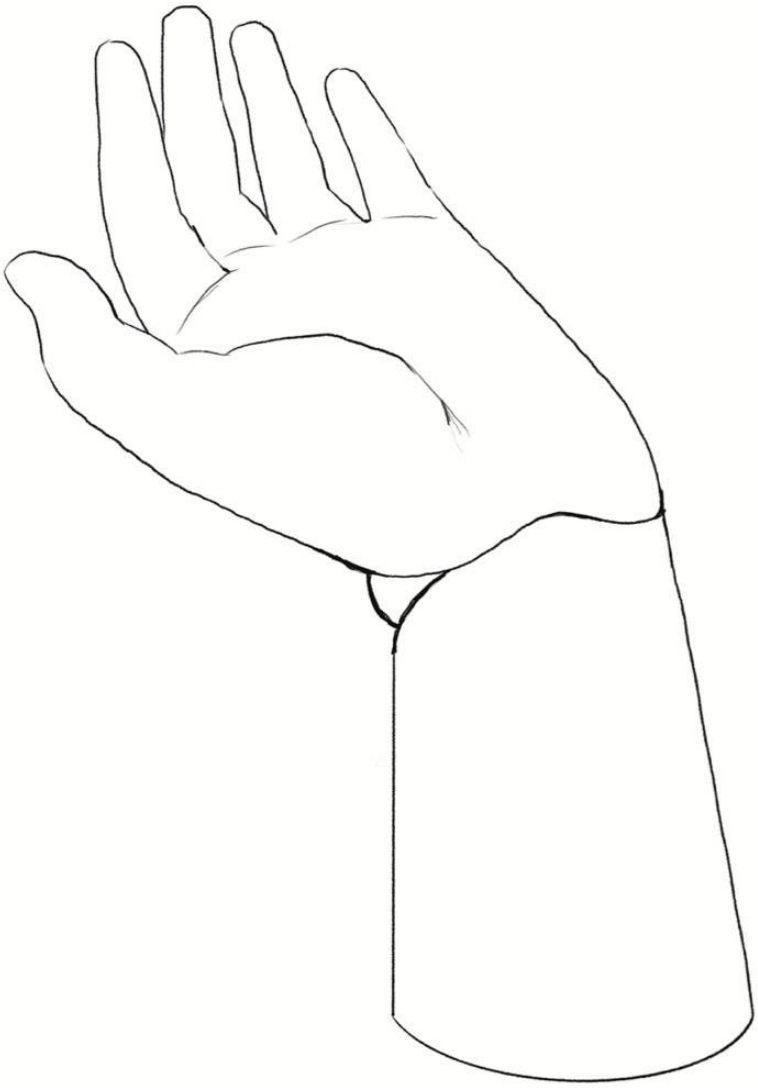

A moving platform (motorised) on which the cube is balanced.

01 What is it?

Imagine a regular cube six faces, eight corners. Now stand it on one corner and let it go. It falls instantly, right? **That's what makes this project exciting.**

Our project is a **self-balancing cube robot** a cube that can stand on its corner, completely unsupported, and stay there even when you push it or disturb it. It looks like magic, but it is pure physics and smart engineering.

The idea is inspired by Cube, a robot developed at ETH Zurich one of the world's top engineering universities. We are building our own version from scratch using 3D-printed parts, off-the-shelf electronics, and control algorithms we have studied and understood ourselves.

> Think of it like this: a Segway balances a person on two wheels using sensors and motors.
> Our cube does the same thing but on a single corner in three dimensions at once.
> It is the hardest version of the balancing problem, and it is beautiful to watch.

02 How does it work?

The cube has three spinning wheels hidden inside it, one for each axis of rotation. Here is the step-by-step story of how it stays up:

Step 1 — The sensor watches everything

Inside the cube sits a tiny sensor chip called an IMU (Inertial Measurement Unit) — the same kind of chip inside your smartphone that detects when you rotate the screen. It measures the cube's tilt angle 100 times per second in all three directions.

Step 2 — The brain does the math

A small microcontroller receives the sensor data and runs a control algorithm. We are implementing a method called LQR (Linear Quadratic Regulator- simple terms, it is a mathematical rule that tells a machine how to move to a target as quickly as possible without wasting too much energy or overshooting the goal) a well-known technique in control theory that calculates exactly how much force is needed to correct any tilt, using the least possible energy.

Step 3 — The wheels push back

Here is the key physics: when a motor inside the cube spins a wheel faster, the cube itself gets pushed in the opposite direction. This is Newton's Third Law every action has an equal and opposite reaction. By spinning the right wheel at the right speed, the cube gets pushed back to vertical before it can fall.

Step 4 — This repeats 100 times a second

The sensor reads, the brain calculates, the wheels spin. Over and over, faster than your eye can see. The cube stays perfectly balanced.

03 Components

The project has two parts: what we print and electronics.

3.1 Electronics — the nervous system

Component	What it does
ESP32 microcontroller	The brain runs the control algorithm, handles Bluetooth communication
MPU-6050 IMU sensor	Measures tilt angles (pitch, roll, yaw) 100× per second
DC motors × 3	Brushless motors that spin the reaction wheels at up to 600 rad/s
LiPo battery (500mAh)	Powers the whole system at 11.1V
Motor driver circuit	Translates control signals into actual motor voltage
Voltage regulator (7805)	Steps 11.1V down to 5V for the logic circuit
Wires, connectors, screws	Assembly hardware

3.2 Mechanical — the body

All structural parts are 3D printed in PLA or PETG filament. Total print time is approximately 18–22 hours.

- 3 reaction wheel side panels — the faces that hold each motor and wheel
- 3 reaction wheels — the spinning discs that store and transfer angular momentum
- 3 plain side panels — the remaining faces of the cube
- 1 internal mount plate — holds the ESP32, battery, and sensor in the centre
- 1 corner tip / pivot — the single contact point with the ground (TPU for grip)
- 3 motor shaft couplers — connect each motor to its wheel

04 How can you interact with it?

This is not just a robot that sits on a shelf. We have planned multiple ways for anyone to interact with it:

PUSH IT	Walk up and give the cube a gentle push. It recovers on its own within 1–2 seconds.

TUNE IT	Connect a phone over Bluetooth and adjust the controller gains live. Watch how changing one number makes the cube wobble, overshoot, or snap back faster. A real control theory experiment in your hands.

The deeper story

Every time someone pushes the cube and watches it recover, they are seeing a real control algorithm at work the same mathematics used in aircraft autopilots, satellite attitude control, and robotic surgery.

Our goal is to make that invisible science visible, touchable, and fun.

05 Why this project?

- **a cube balancing on a corner is immediately attention-grabbing for any audience** It is visually spectacular
- **mechanical design, electronics, embedded programming, and control mathematics** It bridges multiple domains
- **we can start with edge-balancing (simpler) and graduate to corner-balancing as time allows**

06 Proposed timeline

Phase	Deliverable
Week 1	Finalise design, order components, begin 3D printing
Week 2	Assemble mechanical structure, wire electronics, run motor tests
Week 2-3	Flash firmware, test edge-balancing (simpler), tune PID
Week 3-4	Implement LQR controller, move to corner-balancing. Add Bluetooth tuner, build companion game / demo app. Full testing, documentation, and project presentation.