DHOLE PATIL EDUCATION SOCIETY'S

DHOLE PATIL COLLEGE OF ENGINEERING

Department of First year Engineering

Course Code: ESC-102-ELE | **Subject: Basic Electrical Engineering** | **Academic Year – 2025-26**

Question Bank | **Semester –I & II**

Unit –I Elementary Concept and DC Circuit		CO	BT	Marks
S.NO:	**QUESTIONS**			
Que.1	Draw and explain block diagram of elementary power system showing the stages of generation, transmission and distribution of electrical energy.	CO1	01	06
Que.2	Find the Req for the circuit 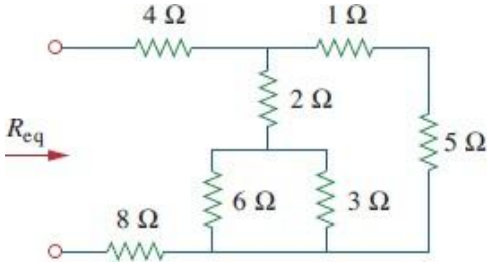	CO1	03	06
Que.3	Find the Equivalent resistor of the circuit 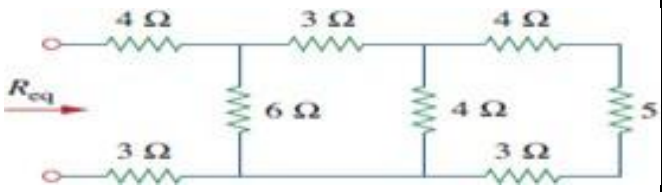	CO1	04	06
Que.4	Find the current supplied by the d.c. source in the circuit shown in Fig. using star/delta transformation. 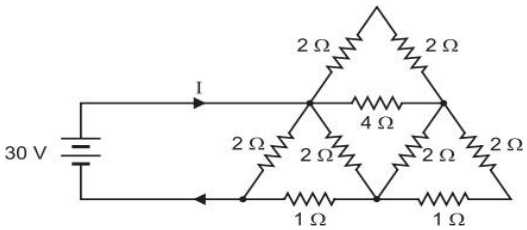	CO1	05	06
Que.5	Explain the terms: (i) Electromotive force (ii) Charge and current relationship. Electric potential and Potential difference.	CO1	02	06
Que.6	State superposition theorem and find current through 5ohm resistance by using this theorem 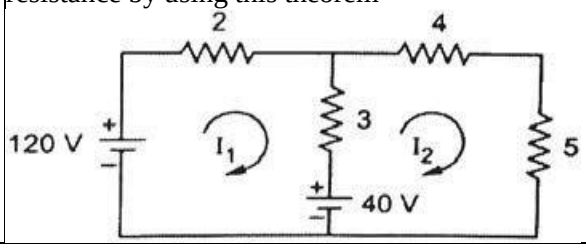	CO1	04	06

Que.7	Calculate the loop currents current in the circuit shown 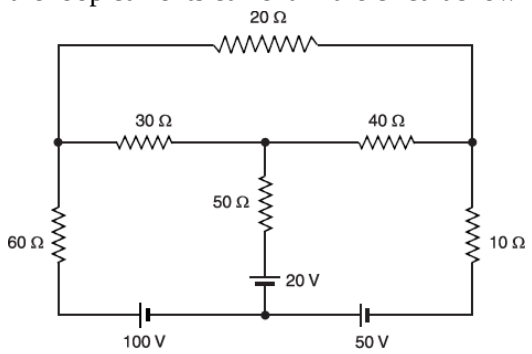	CO1	04	06
Que.8	Derive the expression for conversion of a star connected network into an equivalent delta.	CO1	05	06
Que.9	Explain Ohm's law & its limitations.	CO1	01	06
	Derive the expression for conversion of a delta connected network into an equivalent star. 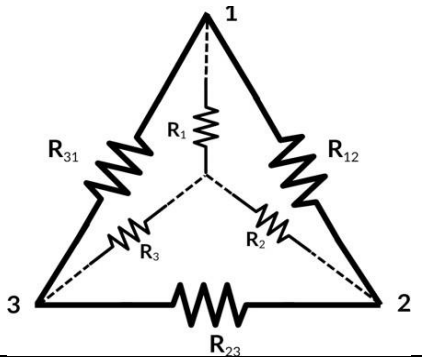	CO1	04	06
Que.10	Define following types of Electrical Networks. (i) Unilateral and Bilateral Network (ii) Linear and non-linear network (iii) Active and Passive Network (iv) Lumped and Distributed Network	CO1	01	06
Que.11	State & explain Superposition theorem. Explain the steps apply in the superposition theorem, to obtain the current through each branch. 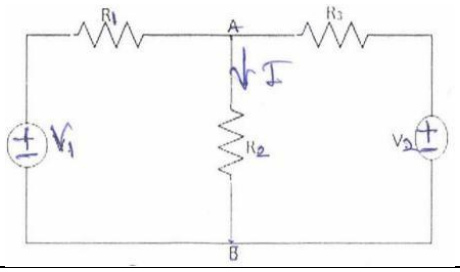	CO1	02	06
Que.12	Calculate the Equivalent resistance of the circuit. 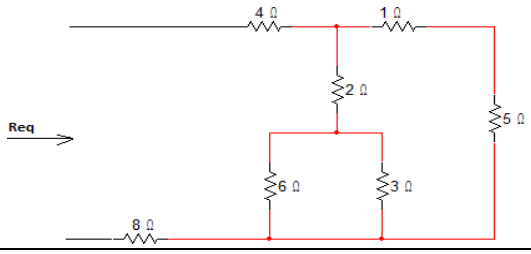	CO1	03	06

Que. 13	Calculate the loop currents. 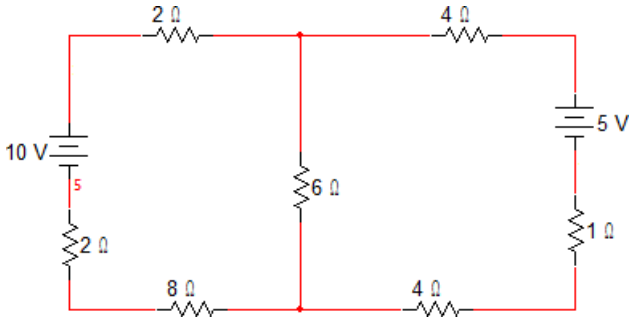	CO1	03	06
Que. 14	With the help of star/delta transformation, obtain the value of current supplied by the battery in the circuit shown in the fig. 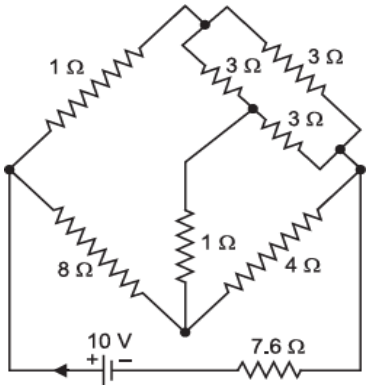	CO1	05	06
Que. 15	Use the superposition theorem to find the current in *R*1,R2 & R3in the circuit 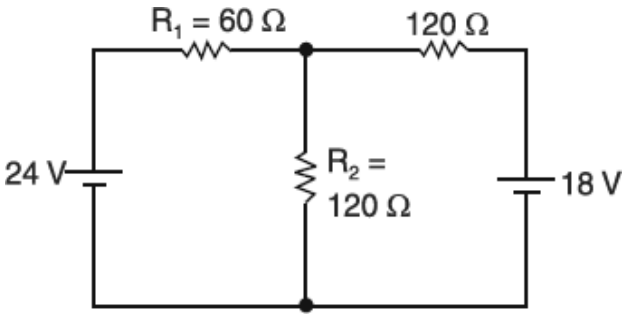	CO1	04	06

Que.25	State and explain Kirchhof's Laws in the context of DC circuits.
Que.26	For the bridge network shown, determine the total resistance seen from the terminals AB using star-delta transformation. 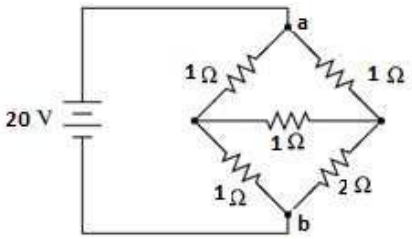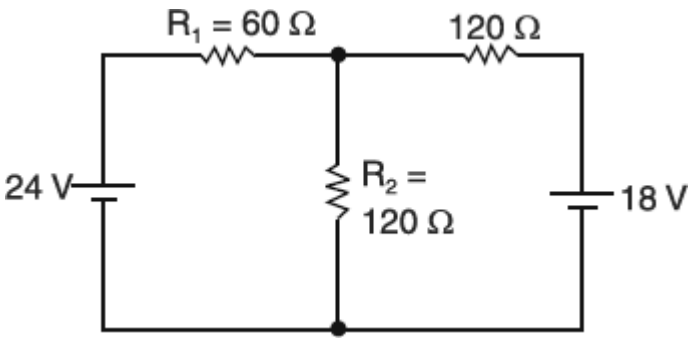
Que.27	Define the term Resistance, Specific resistance, Conductance and Specific Conductance of a material. State their Units and write the formula.
Que.28	Use the superposition theorem to find the current in *R*1,R2 & R3in the circuit