DHOLE PATIL EDUCATION SOCIETY'S
DHOLE PATIL COLLEGE OF ENGINEERING
Accredited by NAAC with A+ Grade, An ISO 9001:2015 Certified Institute
1284, Near Eon IT Park Kharadi, Dhole Patil College Road, Wagholi, Pune-412207
Website: www.dpcoepune.edu.in E-mail:dpcoepune@gmail.com, Phone: 020-66059900

ACA/R / 44	**Department of First Year Engineering**	Academic Year: 2025 -26
Rev : 00		Semester: ODD
Date: 15.12.2016	**CCE-I EXAM**	Section: A, B & C DIV
		Subject: **Basic Electrical Engineering**
Duration : 1Hr		Max. Marks: 30

Instruction: **1) Assume suitable data, if necessary.**
2) Solve Q1 or Q2 and Q3 or Q4

Question Number		Question	Marks	BT	CO
Q.1		**QUESTION DESCRIPTION**			
	a	Draw and explain a single-line diagram of elementary power systems showing the stages of generation, transmission and distribution of electrical energy.	**04**	**1**	**CO1**
	b	Find the current supplied by the d.c. source in the circuit shown in Fig. using star/delta transformation. 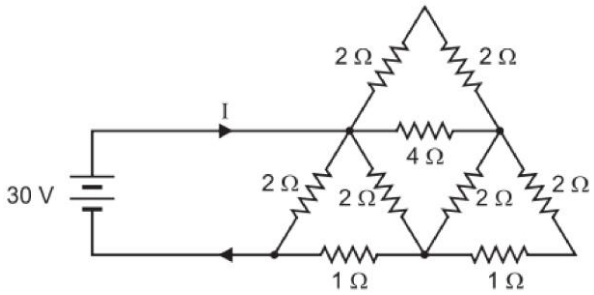	**05**	**1**	**CO1**
	c	a) State and explain Kirchhoff's Laws in the context of DC circuits. b) Write only Equation for the given circuit by using KVL/Loop or mesh analysis 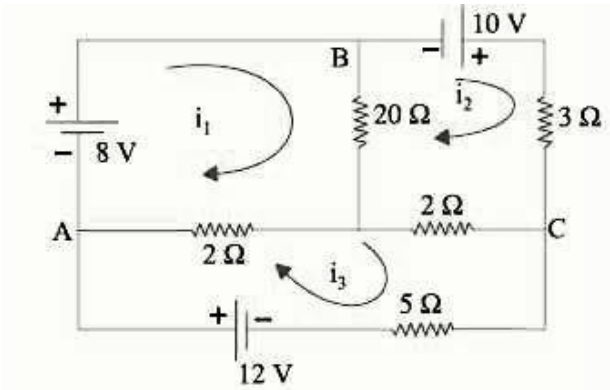	**06**	**2**	**CO1**
Q.2		**QUESTION DESCRIPTION**			
	a	Explain the terms: (i) Electromotive force, Electric potential and Potential difference (ii) Charge and current relationship. (iii) Define resistance and laws of resistance.	**04**	**2**	**CO2**

		(iv) Explain the 1 ampere current			
	b	By superposition theorem, find the current through the resistance R = 1 ohm 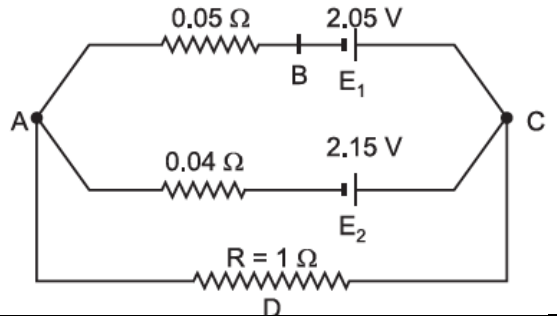	**05**	**3**	**CO2**
	c	a) Derive the expression for conversion of a delta connected network into an equivalent star. b) Derive the expression for conversion of a star connected network into an equivalent Delta.	**06**	**2**	**CO2**
Q.3		**QUESTION DESCRIPTION**			
	a	Define Permeability and prove if $\mu = \mu_o$.	**04**	**2**	**CO2**
	b	A coil is wound with 300 turns on a steel ring of relative permeability of 900. It has a mean circumference of 40 cm and cross sectional area of 5 cm2. If the coil has resistance of 100 ohm and it is connected to 250 V DC supply. Calculate: (a) MMF (b) Field Strength (c) Total flux (d) Reluctance (e) Current in the coil	**05**	**3**	**CO2**
	c	a) Define Self Induced EMF and Mutually Induced EMF with a neat sketch. b) State Faraday's law of Electromagnetic Induction	**06**	**3**	**CO2**
Q.4		**QUESTION DESCRIPTION**			
	a	Define a) Reluctance & its unit b) Permeance and its unit. c) Magnetic flux & Flux density d) Magnetic field intensity.	**04**	**2**	**CO2**
	b	A closed magnetic circuit is composed of two sections in series. Section A has a length of 40 cm and cross sectional area of 10mm2. Section B has a length of 50 cm and cross sectional area of 14mm2. Both the sections are made up of same material having permeability of 650. A coil with 400 turns is wound over one of the section. Find the current required in the coil so as to develop a flux density of 1.4 Tesla in section B.	**05**	**3**	**CO2**
	c	a) Compare Electric circuit and Magnetic circuit. . b) Derive expression for energy stored in inductor per unit volume	**06**	**2**	**CO2**
		******* All the Best!******			