DHOLE PATIL EDUCATION SOCIETY'S

DHOLE PATIL COLLEGE OF ENGINEERING

Department of First year Engineering

Course Code: ESC-102-ELE | **Subject: Basic Electrical Engineering** | **Academic Year – 2025-26**

Question Bank | **Semester -I**

Unit –I Elementary Concept and DC Circuit	
S.NO:	**QUESTIONS**
Que.1	Draw and explain block diagram of elementary power system showing the stages of generation, transmission and distribution of electrical energy.
Que.2	Find the Req for the circuit 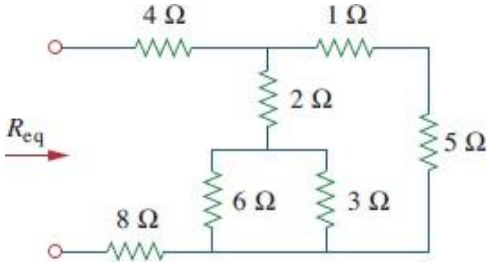
Que.3	Find the Equivalent resistor of the circuit 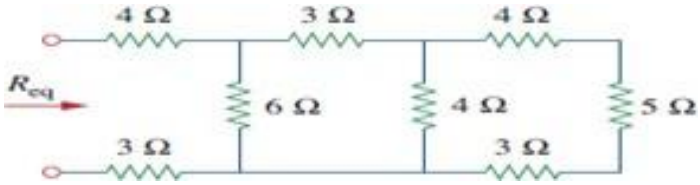
Que.4	Find the current supplied by the d.c. source in the circuit shown in Fig. using star/delta transformation. 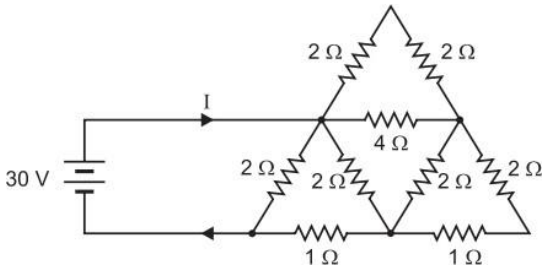
Que.5	Explain the terms: (i) Electromotive force (ii) Charge and current relationship. Electric potential and Potential difference.
Que.6	State superposition theorem and find current through 5ohm resistance by using this theorem 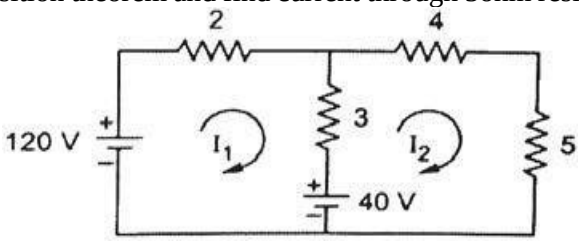

Que.7	Calculate the loop currents current in the circuit shown 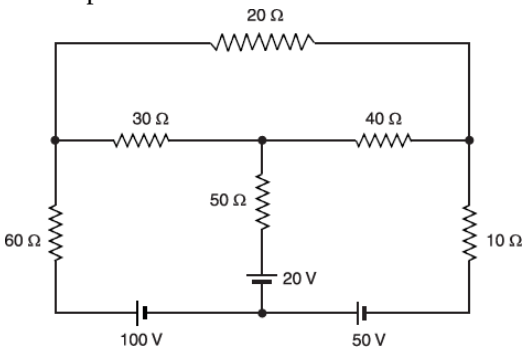
Que.8	Derive the expression for conversion of a star connected network into an equivalent delta.
Que.9	Explain Ohm's law & its limitations.
	Derive the expression for conversion of a delta connected network into an equivalent star. 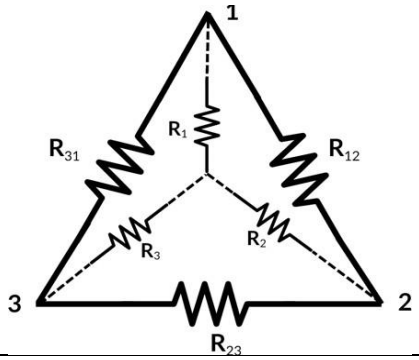
Que.10	Define following types of Electrical Networks. (i) Unilateral and Bilateral Network (ii) Linear and non-linear network (iii) Active and Passive Network (iv) Lumped and Distributed Network
Que.11	State & explain Superposition theorem. Explain the steps apply in the superposition theorem, to obtain the current through each branch. 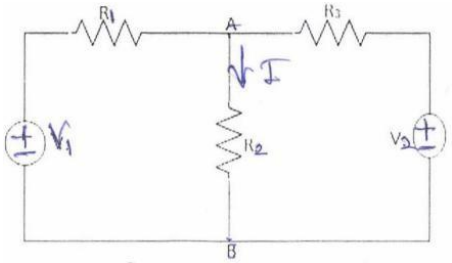
Que.12	Calculate the Equivalent resistance of the circuit. 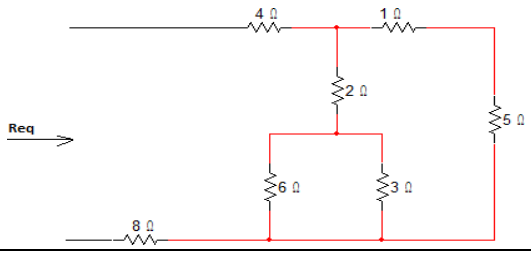

Que. 13	Calculate the loop currents. 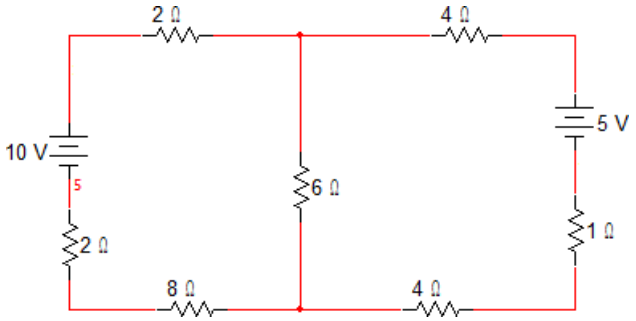
Que. 14	With the help of star/delta transformation, obtain the value of current supplied by the battery in the circuit shown in the fig. 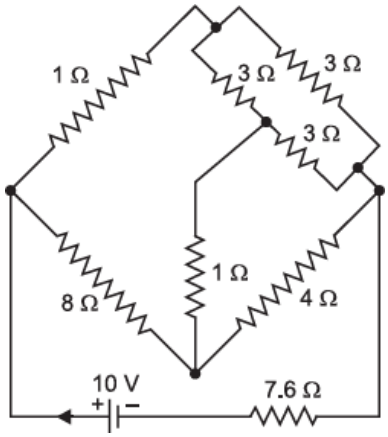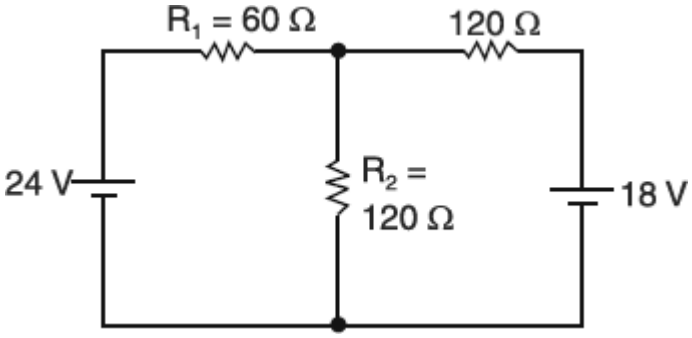
Que. 15	Use the superposition theorem to find the current in *R*1,R2 & R3in the circuit