Published in IET Control Theory and Applications
Received on 16th June 2008
Revised on 2nd December 2008
doi: 10.1049/iet-cta.2008.0241

ISSN 1751-8644

Optimal real-time collision-free motion planning for autonomous underwater vehicles in a 3D underwater space

H. Yuan Z. Qu

School of Electrical Engineering and Computer Science, University of Central Florida, Orlando, FL 32826, USA
E-mail: hyuan@ucf.edu

Abstract: One approach to designing an optimal real-time collision-free trajectory for autonomous underwater vehicles (AUVs) that move in a 3D unknown underwater space presented here. By explicitly considering the kinematic model of AUVs, a class of feasible trajectories is derived in a closed form, and is expressed in terms of two adjustable parameters for the purpose of collision avoidance. Then, a collision avoidance condition is developed to determine a class of collision-free trajectories. Finally, a performance index is established to find an optimal trajectory from the class. All the steps can be implemented in real-time. The advantages of the proposed approach are: (1) The 3D motion planning problem is reduced to a 2D problem. Instead of directly searching in a 3D space, one only needs to determine two parameters in their plane. Therefore computational efforts are greatly reduced, which is suitable for real-time implementation; (2) The vehicle's kinematic model is explicitly considered, and all boundary conditions are met. After the parameters are determined, the trajectory and controls are explicitly solved in closed forms. This method is shown to be effective by computer simulations.

1 Introduction

The study of unmanned, untethered, free-swimming autonomous vehicles has been an active research topic in recent years due to their wide real-world applications, such as oceanographic observations, deep-sea rescue, mineral and oil exploration, bathymetric surveys, sunken ship salvage, protection and cultivation of fishery resources [1–6].

For most real-world applications, it is desirable that the vehicles are capable of exploring within an uncertain environment, as complete environmental information cannot be assumed a priori. Under this background, the motion planning is of key importance for vehicles to successfully carry out various missions. The goal of motion planning is to generate the desired trajectory to be fed into the motion control system so that the vehicle executes or tracks the desired trajectory. Fig. 1 illustrates how this functionality can be implemented for an autonomous underwater vehicles (AUV). The higher level mission management module usually supplies waypoint information to the motion planner remotely or pre-stores it into the onboard system. The motion planner retrieves the waypoints, generates a desired trajectory, which includes the desired position profile X_d and velocity profile V_d. X_d and V_d are fed into the kinematic controller to obtain a reference velocity V_r, then the torque-level tracking control can be designed through backstepping techniques [6, 7]. In this paper, we will focus on designing an optimal, real-time, and collision-free motion planner for AUVs that operate in an unknown underwater space.

The popular methods for motion planning include reactive approach, trajectory parameterisations and exhaustive search. The reactive approach was pioneered in [8], its basic idea is to assign potential fields to obstacles and pathways to expel the trajectory away from obstacles and bring the trajectory to the final destination. Follow-up work can be found in [4, 5, 9–13]. These results only address the 2D problem. While 3D planning can be similarly done, it requires much more

© The Institution of Engineering and Technology 2009

Authorized licensed use limited to: University of Central Florida. Downloaded on January 5, 2010 at 09:33 from IEEE Xplore. Restrictions apply.

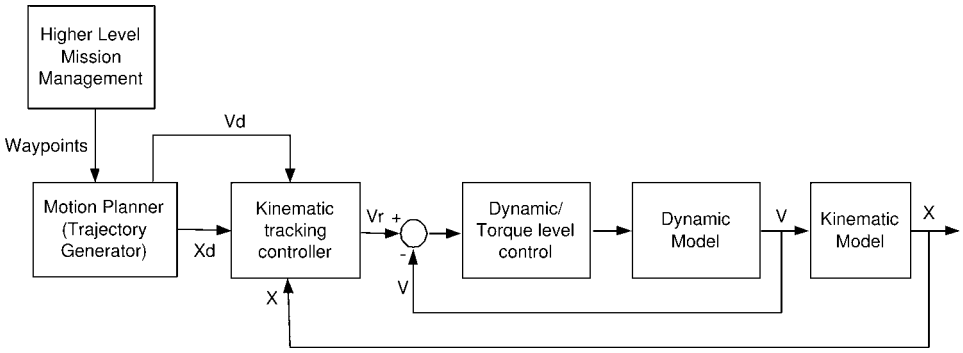

Figure 1 *Control block diagram for an underwater vehicle*

computation capability. Also, the reactive approach generally suffers from local minima. For parameterisation approaches, a general principle is outlined in [14]. Splines are used in [15], however, the kinematic constraints are not considered. In [16], trajectories are parameterised by polynomials, then the coefficients are determined by fitting the kinematic model and boundary conditions. In [17], an optimal solution of [16] is discussed. Also, only 2D cases are addressed in [15–17]. For exhaustive search methods in [18–21], the space is typically divided into regions and a safe path is found by successively searching adjacent regions to the destination. To avoid the need of complete prior knowledge about the environment, an improvement has been proposed in [22], which combines exhaustive search with the potential field methods for 3D path planning in a dynamic environment. These approaches generally do not consider the vehicles kinematic model and a collision-free 3D path planned may not be feasible for a specific vehicle.

By acknowledging the limitations of the existing techniques, we can improve on these methods by leveraging this information and creating a motion planning approach for an AUV in a 3D space. The trajectories are parameterised by polynomials. By allowing two parameters to be adjustable, the 3D problem is reduced to a 2D problem. The vehicle's kinematic model is explicitly taken into consideration and controls can be solved in closed forms, which are suitable for real-time implementation. Moreover, as long as collision does not occur at the boundary conditions the collision avoidance condition is always solvable.

This paper is organised into five sections. In Section 2, the problem of real-time motion planning in a 3D underwater space is formulated. In Section 3, the motion planning problem is solved in detail and solvability is discussed. Section 4 gives the simulation results and Section 5 concludes the paper.

2 Problem formulation

One torpedo shaped AUV model is shown in Fig. 2. Two reference frames are established, one is the inertial frame $O - XYZ$, the other is a body-fixed frame $c - xyz$, which

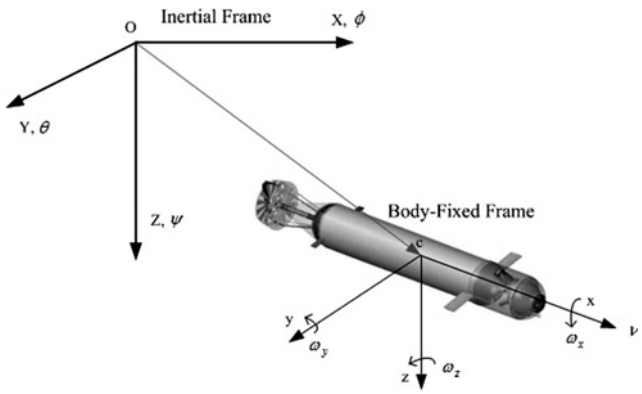

Figure 2 *AUV model*

is attached to the centre of gravity (CG) of the AUV with X axis along the longitudinal direction and z axis pointing along oz direction. Both frames follow the right-hand rule.

2.1 Kinematic model

In the inertial frame, the configuration vector $\mathbf{q} = (x, y, z, \phi, \theta, \psi)$ is used to specify the position and orientation of the AUV where (x, y, z) is the vehicle's CG and (ψ, θ, ϕ) are the $Z - Y - X$ Euler angles, with ψ as the yaw, θ as the pitch, and ϕ as the roll. The kinematic model is given by the following two equations

$$\begin{bmatrix} \dot{x} \\ \dot{y} \\ \dot{z} \end{bmatrix} = \begin{bmatrix} v\cos\theta\cos\psi \\ v\cos\theta\sin\psi \\ -v\sin\theta \end{bmatrix} \tag{1}$$

$$\begin{bmatrix} \dot{\phi} \\ \dot{\theta} \\ \dot{\psi} \end{bmatrix} = \begin{bmatrix} 1 & \sin\phi\tan\theta & \cos\phi\tan\theta \\ 0 & \cos\phi & -\sin\phi \\ 0 & \sin\phi\sec\theta & \cos\phi\sec\theta \end{bmatrix} \begin{bmatrix} \omega_x \\ \omega_y \\ \omega_z \end{bmatrix} \tag{2}$$

where $\theta \neq \pm\pi/2 + h\pi$, $h = 0, 1, \ldots$. v is the longitudinal velocity, ω_x, ω_y and ω_z are angular velocities around the body's three fixed axises. The motion planning is based on the kinematic model (1) and (2), v, ω_x, ω_y and ω_z are considered to be the kinematic level reference controls, which are explicitly solved in (7) and (8).

© The Institution of Engineering and Technology 2009

Authorized licensed use limited to: University of Central Florida. Downloaded on January 5, 2010 at 09:33 from IEEE Xplore. Restrictions apply.

2.2 Trajectory planning problem

Fig. 3 shows a 3D underwater space with depth d. One AUV is moving from its initial condition $\mathbf{q}_0 = (x_0, y_0, z_0, \phi_0, \theta_0, \psi_0)$ at time t_0 with speed v_0 to the terminal condition $\mathbf{q}_f = (x_f, y_f, z_f, \phi_f, \theta_f, \psi_f)$ at time t_f with speed v_f. In general, the geometrical model of the AUV can be any shape that can be modelled mathematically, or a composite of multiple such shapes. For simplicity of derivation, we consider it to be the smallest sphere that contains the AUV. The centre of the sphere is at its CG, and the radius is r_0. Since the size of vehicles can be taken into account by modelling the obstacles to be slightly larger, one only needs the vehicle's CG position and the obstacles' positions to determine whether there will be collisions. The effective range of the onboard sensor is also modelled as a sphere centred at the CG with radius R_s. The trajectory planning problem is to find a collision-free trajectory that satisfies the vehicle's boundary conditions and its kinematic model. The following assumptions are made to ensure the solvability and to simplify the technical development.

Assumption 1: All obstacles have convex shapes.

Assumption 2: Boundary points do not locate inside any obstacle.

Assumption 3: $x_f > x_0$, $-\pi/2 < \psi_0$, $\psi_f < \pi/2$, and the pitch angle is maintained in $-\pi/2 < \theta > \pi/2$.

Assumption 1 is needed because if an obstacle is concave, and a point locates close to its concave area, it would be equivalent that this point is inside a convex object which is adopted to model this concave obstacle. Assumption 2 ensures the solvability of collision avoidance conditions, which will be discussed in Section 3.4. In Assumption 3, $x_f > x_0$, $-\pi/2 < \psi_0$, $\psi_f < \pi/2$ can always be satisfied by inserting middle points and/or defining new coordinate systems. Here $-\pi/2 < \theta < \pi/2$ is needed to avoid the representation singularity in (2), it is reasonable because it is very rare that an AUV would have its pitch angle exceed $\pm\pi/2$.

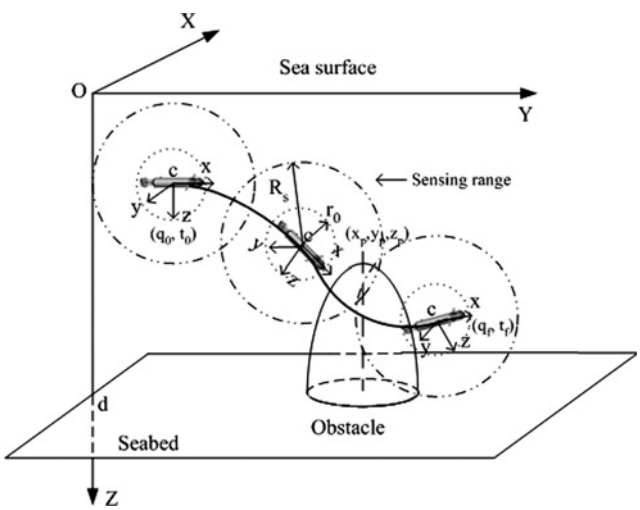

Figure 3 *AUV moving in an unknown environment*

In underwater environments, an obstacle could be a hill growing from the seabed. It can be modelled by an elliptical paraboloid. In the inertial frame, the equation is

$$z - z_p = \frac{(x - x_p)^2}{m^2} + \frac{(y - y_p)^2}{n^2}$$

where (x_p, y_p, z_p) is the peak position and m, n are parameters that could be modified to change its size. Define

$$s(x, y, z) = \frac{(x - x_p)^2}{m^2} + \frac{(y - y_p)^2}{n^2} - (z - z_p)$$

Obviously, $s(x, y, z) > 0$ indicates that the point (x, y, z) locates outside an obstacle, while $s(x, y, z) \leq 0$ means it locates inside or on the surface of an obstacle. Hence, a collision avoidance criterion could be

$$s(x, y, z) > 0 \tag{3}$$

Suppose the vehicle's trajectory can be parameterised as $\mathbf{q} = \mathbf{q}(t, \mathbf{w})$, where $\mathbf{w}$ is a decision vector that can be chosen. Moreover, a performance index $J(\mathbf{q}, \dot{\mathbf{q}})$ can be established. It could be a measure of the length of the trajectory or the energy cost to manoeuvre on the trajectory, and so on. Therefore the trajectory planning problem is finally formulated as the following optimisation problem

$$\begin{aligned} &\min_{\mathbf{w}} J(\mathbf{q}, \dot{\mathbf{q}}) \\ &\text{s.t. } \mathbf{q}(t_0) = \mathbf{q}_0, \quad \mathbf{q}(t_f) = \mathbf{q}_f \\ &s(x, y, z) > 0, \quad \forall t \in [t_0\ t_f] \\ &M(\mathbf{q}, \dot{\mathbf{q}}) = 0 \end{aligned}$$

where $M(\mathbf{q}, \dot{\mathbf{q}})$ denotes the vehicle's kinematic model.

3 Real-time trajectory planning for AUVs

In this section, the real-time trajectory planning problem is solved in three steps. In Section 3.1, trajectory planning is considered without obstacles. In Section 3.2, the parameterisation is made piecewise and a condition to avoid the obstacles is developed. Section 3.3 gives an optimal solution to the parameters and Section 3.4 discusses the solution and solvability.

© The Institution of Engineering and Technology 2009
IET Control Theory Appl., 2009, Vol. 3, Iss. 6, pp. 712–721
doi: 10.1049/iet-cta.2008.0241

Authorized licensed use limited to: University of Central Florida. Downloaded on January 5, 2010 at 09:33 from IEEE Xplore. Restrictions apply.

3.1 Trajectory planning without obstacles

The kinematic model given by (1) and (2) can be rewritten as

$$\begin{aligned}\dot{x} &= v\cos\theta\cos\psi\\ \dot{y} &= v\cos\theta\sin\psi\\ \dot{z} &= -v\sin\theta\\ \dot{\phi} &= \omega_x + \dot{\psi}\sin\theta\\ \dot{\theta} &= \omega_y\cos\phi - \omega_z\sin\phi\\ \dot{\psi} &= \omega_y\sin\phi\sec\theta + \omega_z\cos\phi\sec\theta\end{aligned} \tag{4}$$

From boundary conditions, the following quantities can be determined: $x(t_0)$, $\dot{x}(t_0)$, $x(t_f)$, $\dot{x}(t_f)$, $y(t_0)$, $(\mathrm{d}y/\mathrm{d}x)|_{t_0}$, $y(t_f)$, $(\mathrm{d}y/\mathrm{d}x)|_{t_f}$, $z(t_0)$, $\dot{z}(t_0)$, $z(t_f)$, $\dot{z}(t_f)$, that is, there are 4 boundary conditions available for each of x, y and z. Hence, when polynomial parameterisation is used, each polynomial at least needs four free coefficients (3rd order). If a higher order is chosen, redundant coefficients can be treated as the decision vector, which provides the freedom to choose trajectories. We parameterise the desired trajectory to be

$$\begin{aligned}x(t) &= a_0 + a_1 t + a_2 t^2 + a_3 t^3\\ y(x) &= b_0 + b_1 x + b_2 x^2 + b_3 x^3 + b_4 x^4\\ z(t) &= c_0 + c_1 t + c_2 t^2 + c_3 t^3 + c_4 t^4\end{aligned} \tag{5}$$

By meeting the boundary conditions of model (4), and putting the equations into a matrix form, the coefficients can be solved as

$$\begin{aligned}[a_0\ a_1\ a_2\ a_3]^{\mathrm{T}} &= (\mathbf{B}_1)^{-1}\mathbf{Y}_1\\ [b_0\ b_1\ b_2\ b_3]^{\mathrm{T}} &= (\mathbf{B}_2)^{-1}(\mathbf{Y}_2 - \mathbf{A}_2 b_4)\\ [c_0\ c_1\ c_2\ c_3]^{\mathrm{T}} &= (\mathbf{B}_3)^{-1}(\mathbf{Y}_3 - \mathbf{A}_3 c_4)\end{aligned} \tag{6}$$

where

$$\mathbf{B}_1 = \begin{bmatrix}1 & t_0 & t_0^2 & t_0^3\\ 0 & 1 & 2t_0 & 3t_0^2\\ 1 & t_f & t_f^2 & t_f^3\\ 0 & 1 & 2t_f & 3t_f^2\end{bmatrix},\quad \mathbf{A}_2 = \begin{bmatrix}(x_0)^4\\ 4(x_0)^3\\ (x_f)^4\\ 4(x_f)^3\end{bmatrix}$$

$$\mathbf{B}_2 = \begin{bmatrix}1 & x_0 & (x_0)^2 & (x_0)^3\\ 0 & 1 & 2x_0 & 3(x_0)^2\\ 1 & x_f & (x_f)^2 & (x_f)^3\\ 0 & 1 & 2x_f & 3(x_f)^2\end{bmatrix},\quad \mathbf{B}_3 = \mathbf{B}_1$$

$$\mathbf{Y}_1 = \begin{bmatrix}x_0\\ v_0\cos\theta_0\cos\psi_0\\ x_f\\ v_f\cos\theta_f\cos\psi_f\end{bmatrix},\quad \mathbf{Y}_2 = \begin{bmatrix}y_0\\ \tan\psi_0\\ y_f\\ \tan\psi_f\end{bmatrix}$$

$$\mathbf{Y}_3 = \begin{bmatrix}z_0\\ v_0\sin\theta_0\\ z_f\\ v_f\sin\theta_f\end{bmatrix},\quad \mathbf{A}_3 = \begin{bmatrix}(t_0)^4\\ 4(t_0)^3\\ (t_f)^4\\ 4(t_f)^3\end{bmatrix}$$

It is clear from (6) that in the parameterisation, we have chosen $\mathbf{w} = (b_4, c_4)$ to be the decision vector. By Assumption 3, $x_0 \neq x_f$, and in a practical mission, there would be $t_f > t_0$, hence the matrices $\mathbf{B}_1$, $\mathbf{B}_2$, $\mathbf{B}_3$ are all non-singular and invertible. Therefore the coefficients of (5) are solvable.

Theorem 3.1: The reference controls given by

$$v = \sqrt{\dot{x}^2 + \dot{y}^2 + \dot{z}^2} \tag{7}$$

and

$$\begin{aligned}\omega_x &= -k\phi_0 \mathrm{e}^{-kt} - \frac{(\ddot{y}\dot{x} - \dot{y}\ddot{x})\dot{z}}{(\dot{x}^2 + \dot{y}^2)\sqrt{\dot{x}^2 + \dot{y}^2 + \dot{z}^2}}\\ \omega_y &= \frac{\ddot{z}(\dot{x}^2 + \dot{y}^2) - \dot{z}(\dot{x}\ddot{x} + \dot{y}\ddot{y})}{\sqrt{\dot{x}^2 + \dot{y}^2}(\dot{x}^2 + \dot{y}^2 + \dot{z}^2)}\cos(\phi_0 \mathrm{e}^{-kt})\\ &\quad + \frac{\ddot{y}\dot{x} - \dot{y}\ddot{x}}{\sqrt{(\dot{x}^2 + \dot{y}^2)(\dot{x}^2 + \dot{y}^2 + \dot{z}^2)}}\sin(\phi_0 \mathrm{e}^{-kt})\\ \omega_z &= \frac{\ddot{y}\dot{x} - \dot{y}\ddot{x}}{\sqrt{(\dot{x}^2 + \dot{y}^2)(\dot{x}^2 + \dot{y}^2 + \dot{z}^2)}}\cos(\phi_0 \mathrm{e}^{-kt})\\ &\quad - \frac{\ddot{z}(\dot{x}^2 + \dot{y}^2) - \dot{z}(\dot{x}\ddot{x} + \dot{y}\ddot{y})}{\sqrt{\dot{x}^2 + \dot{y}^2}(\dot{x}^2 + \dot{y}^2 + \dot{z}^2)}\sin(\phi_0 \mathrm{e}^{-kt})\end{aligned} \tag{8}$$

where $k > 0$ is a constant, steer the AUV along the trajectory (5).

Proof: It follows from (4) that

$$v = \sqrt{\dot{x}^2 + \dot{y}^2 + \dot{z}^2}$$

Let the AUV always restore itself to be upright, then one can design

$$\dot{\phi} = -k\phi$$

hence

$$\phi = \phi_0 \mathrm{e}^{-kt} \tag{9}$$

Under Assumption 3, the slope of polynomial trajectory $y(x)$ cannot exceed $\pm\pi/2$, hence $\psi(t) \in (-\frac{\pi}{2}\ \frac{\pi}{2})$, therefore

$$\psi = \arctan\frac{\dot{y}}{\dot{x}} \tag{10}$$

doi: 10.1049/iet-cta.2008.0241
© The Institution of Engineering and Technology 2009

Authorized licensed use limited to: University of Central Florida. Downloaded on January 5, 2010 at 09:33 from IEEE Xplore. Restrictions apply.

The pitch angle is always maintained in $(-\frac{\pi}{2}\ \frac{\pi}{2})$, hence

$$\theta = \arctan \frac{\dot{z}}{\sqrt{\dot{x}^2 + \dot{y}^2}} \tag{11}$$

Substitute (9), (10) and (11) into (4) leads to (8). □

3.2 Trajectory planning with obstacles

Exploring an unknown environment requires the AUV to implement its trajectory planning algorithm in real-time to update the controls. This requirement can be fulfilled by a piecewise-constant parameterisation. Let T be the time for the AUV to complete its manoeuvre, and T_s be the sampling period, such that $\bar{k} = T/T_s$ is an integer. Let $t_k = t_0 + kT_s$, when $k = 0$, the initial condition is q_0. To $\bar{k} > k > 0$, the initial condition is given by $\mathbf{q}_k = (x_k,\ y_k,\ z_k,\ \phi_k,\ \theta_k,\ \psi_k)$, the terminal condition is always $\mathbf{q}_f$. By using the new initial condition, the trajectory planning method described in Section 3.1 can be used for real-time replanning as k increases. In the latter part of this paper, all the notations with superscript k or subscript k mean they are versions of the corresponding variables at the kth sampling time.

In parameterisation (5), $x(t)$ can be determined uniquely by the boundary conditions, while the coefficients of $y(t)$ and $z(t)$ are in terms of b_4^k and c_4^k, hence a collision free trajectory can be obtained by adjusting the two parameters according to the collision avoidance criterion. By substituting the trajectory (5) into (3), the collision avoidance criterion becomes

$$f_3 c_4^k \le \frac{f_1^2}{n^2}(b_4^k)^2 + \frac{2f_1(f_2 - y_p)}{n^2} b_4^k + \frac{(f_2 - y_p)^2}{n^2} - \frac{(x - x_p)^2}{m^2} + z_p - f_4, \quad \forall t \in [t_0\ t_f] \tag{12}$$

where

$$f_1 = x^4 - [1\ x\ x^2\ x^3](\mathbf{B}_2^k)^{-1}\mathbf{A}_2^k$$
$$f_2 = [1\ x\ x^2\ x^3](\mathbf{B}_2^k)^{-1}\mathbf{Y}_2^k$$
$$f_3 = t^4 - [1\ t\ t^2\ t^3](\mathbf{B}_3^k)^{-1}\mathbf{A}_3^k$$
$$f_4 = [1\ t\ t^2\ t^3](\mathbf{B}_3^k)^{-1}\mathbf{Y}_3^k$$

In fact, it is not necessary to check the collision avoidance criterion (12) in all time domains. By projecting a 2D image of the obstacle onto the seabed, the largest potential collision area can be obtained, which is an ellipse

$$d - z_p = \frac{(x - x_p)^2}{m^2} + \frac{(y - y_p)^2}{n^2}$$

Its solution is

$$x = x_p + m\sqrt{d - z_p}\cos\alpha$$
$$y = y_p + n\sqrt{d - z_p}\sin\alpha$$

where $\alpha \in [0,\ 2\pi]$. It indicates that $x \in [x_p - m\sqrt{d - z_p}\ x_p + m\sqrt{d - z_p}]$ and $y \in [y_p - n\sqrt{d - z_p}\ y_p + n\sqrt{d - z_p}]$. Then the time interval $[\underline{t}\ \bar{t}] \subset [t_0\ t_f]$ could be solved when $x(t) \in [x_p - m\sqrt{d - z_p}\ \ x_p + m\sqrt{d - z_p}]$. Only in this interval, the collision avoidance criterion needs to be checked.

Since the AUV cannot go above the sea surface or below the seabed, the following constraint should always be applied

$$0 \le z(t) \le d, \quad \forall t \in [t_0\ t_f]$$

from which, the following inequality about c_4^k can be derived

$$-f_4 \le f_3 c_4^k \le d - f_4, \quad \forall t \in [t_k\ t_f] \tag{13}$$

It shows that if $(b_4^k,\ c_4^k)$ is solvable, the choice is not unique, which would yield a family of trajectories.

3.3 Optimal solution of candidate trajectories

Equation (5) parameterises a family of trajectories by making $(b_4^k,\ c_4^k)$ variable. Nevertheless, some choice of $(b_4^k,\ c_4^k)$ may generate long detoured paths. A suitable performance index (PI) needs to be established to find an optimal choice of $(b_4^k,\ c_4^k)$ that minimises the trajectory length. A straightforward PI is the arc length, which is:

$$J_k^\circ(b_4^k,\ c_4^k) = \int_{x_k}^{x_f} \sqrt{1 + \left(\frac{\mathrm{d}y}{\mathrm{d}x}\right)^2 + \left(\frac{\mathrm{d}z}{\mathrm{d}x}\right)^2}\,\mathrm{d}x \tag{14}$$

However, no optimal solution of $(b_4^k,\ c_4^k)$ can be solved in closed form from (14). One has to search the $(b_4^k,\ c_4^k)$ plane without any prior information and integrate the arc length numerically, which requires huge computational efforts. Here, we introduce an 'initial straight line' (ISL), which is the line segment that connects the starting position at kth sampling period and the goal. Its equation in a 3D space is given by

$$y_l = K_y(x_l - x_k) + y_k$$
$$z_l = K_z(x_l - x_k) + z_k$$

where $(x_l,\ y_l,\ z_l)$ are coordinates of the ISL, with $x_k \le x_l \le x_f$, and

$$K_y = \frac{y_f - y_k}{x_f - x_k}, \quad K_z = \frac{z_f - z_k}{x_f - x_k}$$

© The Institution of Engineering and Technology 2009
IET Control Theory Appl., 2009, Vol. 3, Iss. 6, pp. 712–721
doi: 10.1049/iet-cta.2008.0241

Authorized licensed use limited to: University of Central Florida. Downloaded on January 5, 2010 at 09:33 from IEEE Xplore. Restrictions apply.

The PI can be established as

$$J_k(b_4^k, c_4^k) = \int_{x_k}^{x_f} [(x - x_l))^2 + (y - y_l)^2 + (z - z_l)^2]\mathrm{d}x \quad (15)$$

where $x_l = x(t)$ is set. In essence, PI (15) measures the closeness of the trajectory to a straight line trajectory.

Theorem 3.2: Under PI (15), the optimal solution of (b_4^k, c_4^k) is given by

$$\begin{aligned} b_4^{k^*} &= -\frac{p_2}{2p_1} \\ c_4^{k^*} &= -\frac{p_4}{2p_3} \end{aligned} \quad (16)$$

and the optimal PI is

$$J_k^*(b_4^{k^*}, c_4^{k^*}) = p_5 - \frac{p_2^2}{4p_1} - \frac{p_4^2}{4p_3}$$

where

$$\begin{aligned} p_1 &= \int_{x_k}^{x_f} (f_1)^2 \mathrm{d}x \\ p_2 &= 2\int_{x_k}^{x_f} [f_1 f_2 - f_1 y_k - f_1 K_y(x - x_k)]\mathrm{d}x \\ p_3 &= \int_{x_k}^{x_f} (f_3)^2 \mathrm{d}x \\ p_4 &= 2\int_{x_k}^{x_f} [f_3 f_4 - f_3 z_k - f_3 K_z(x - x_k)]\mathrm{d}x \\ p_5 &= \int_{x_k}^{x_f} [f_2 - K_y(x - x_k) - y_k]^2 \mathrm{d}x \\ &\quad + \int_{x_k}^{x_f} [f_4 - K_z(x - x_k) - z_k]^2 \mathrm{d}x \end{aligned}$$

Proof: It follows from (15) that

$$\begin{aligned} J_k(b_4^k, c_4^k) &= \int_{x_k}^{x_f} (y - y_l)^2 \mathrm{d}x + \int_{x_k}^{x_f} (z - z_l)^2 \mathrm{d}x \\ &= \int_{x_k}^{x_f} [f_1 b_4^k + f_2 - K_y(x - x_k) - y_k]^2 \mathrm{d}x \\ &\quad + \int_{x_k}^{x_f} [f_3 b_4^k + f_4 - K_z(x - x_k) - z_k]^2 \mathrm{d}x \\ &= p_1 (b_4^k)^2 + p_2 b_4^k + p_3 (c_4^k)^2 + p_4 c_4^k + p_5 \\ &= p_1 \left(b_4^k + \frac{p_2}{2p_1}\right)^2 + p_3 \left(c_4^k + \frac{p_4}{2p_3}\right)^2 + p_5 - \frac{p_2^2}{4p_1} - \frac{p_4^2}{4p_3} \end{aligned} \quad (17)$$

By Assumption 3, $x_f > x_0$, therefore $p_1, p_3 > 0$ (note that f_1, f_3 are both polynomials of finite order, the number of roots to zero is finite, hence $f_1 \equiv 0$ or $f_3 \equiv 0$ would not happen). Therefore the optimal PI is obtained at $b_4^{k^*} = -p_2/2p_1$, $c_4^{k^*} = -p_4/2p_3$, and its value is $J_k^*(b_4^{k^*}, c_4^{k^*}) = p_5 - (p_2^2/4p_1) - (p_4^2/4p_3)$. Note that by definition of PI (15), $J_k^*(b_4^{k^*}, c_4^{k^*}) \geq 0$. □

More detailed investigation shows that the contour of the PI is a series ellipses centred at (16). It follows from (17) that

$$J_k(b_4^k, c_4^k) - J_k^*(b_4^{k^*}, c_4^{k^*}) = p_1 \left(b_4^k + \frac{p_2}{2p_1}\right)^2 + p_3 \left(c_4^k + \frac{p_4}{2p_3}\right)^2$$

For sub-optimal PI $J_k(b_4^k, c_4^k)$, we can represent it by an incremental change based on $J_k^*(b_4^{k^*}, c_4^{k^*})$, that is, $J_k(b_4^k, c_4^k) = J_k^*(b_4^{k^*}, c_4^{k^*}) + i\delta$, where $i = 1, 2, 3, \ldots,$ and $\delta > 0$ is a step size that can be chosen. It yields

$$i\delta = p_1 \left(b_4^k + \frac{p_2}{2p_1}\right)^2 + p_3 \left(c_4^k + \frac{p_4}{2p_3}\right)^2 \quad (18)$$

Clearly, this is an elliptical equation, and its centre is $(b_4^{k^*}, c_4^{k^*})$. All points on the ellipse has the same PI $J_k^* + i\delta$. By increasing i, the contours are expanded. Equation (18) can be transformed into the following form to calculate (b_4^k, c_4^k)

$$\begin{aligned} b_4^k &= b_4^{k^*} + \sqrt{\frac{i\delta}{p_1}} \cos\alpha \\ c_4^k &= c_4^{k^*} + \sqrt{\frac{i\delta}{p_3}} \sin\alpha \end{aligned} \quad (19)$$

where $\alpha \in [0\ 2\pi)$ is an angle parameter, for example, in implementation, it can be supplied as $\alpha = j\pi/180$, $j = 0, 1, 2, \ldots, 359$.

3.4 Solution and solvability

In summary of the discussions in Sections 3.1, 3.2 and 3.3, the steps to obtain a solution of (b_4^k, c_4^k) can be given as follows

- *Step 1:* By solving (16), obtain the optimal solution of $(b_4^{k^*}, c_4^{k^*})$ without considering obstacles.

- *Step 2:* Consider the obstacle avoidance condition (12). In the (b_4^k, c_4^k) plane as shown in Fig. 4, only the points outside the parabola boundary satisfy (12). Substitute $(b_4^{k^*}, c_4^{k^*})$ in (12). If it holds, then the given solution is not only optimal, but also avoids the obstacle. In this case, the optimal point is illustrated by '*'. If (12) does not hold, recall that the contour of the PI is a series of ellipses centreed at $(b_4^{k^*}, c_4^{k^*})$, we expand the contour until the first point $(b_4^{k'}, c_4^{k'})$ that satisfies (12) is found, which is a suboptimal point with relatively low PI value. In this case, the optimal point and suboptimal point are marked by 'x' and '+', respectively.

- *Step 3:* Check the constraint (13). It shows that no matter what sign f_3 is, the solution set of c_4^k is a closed interval. The

doi: 10.1049/iet-cta.2008.0241
© The Institution of Engineering and Technology 2009

Authorized licensed use limited to: University of Central Florida. Downloaded on January 5, 2010 at 09:33 from IEEE Xplore. Restrictions apply.

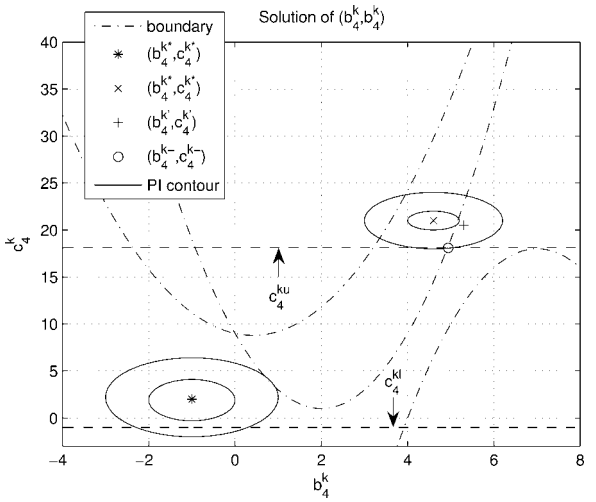

Figure 4 *Solution of* (b_4^k, c_4^k)

intersection of solution sets over time could be empty or non-empty. In the case that it is non-empty, let it be $[c_4^{kl}\ \ c_4^{ku}]$. It denotes a strip in the (b_4^k, c_4^k) plane. If the solution obtained in previous steps, that is, (b_4^{k*}, c_4^{k*}) or ($b_4^{k'}$, $c_4^{k'}$), locates in the strip, then no further modification is needed. Otherwise the PI contour needs to be enlarged again to find the point (b_4^{k-}, c_4^{k-}) which first gets into the strip. This point is the new solution of (b_4^k, c_4^k), and is marked by 'o' in Fig. 4.

On the other hand, if the solution set is empty, then no matter what c_4^k is chosen, part of the trajectory is going to be above the sea surface or below the seabed. The case happens when the boundary points are above the sea surface or below the seabed, or the AUV stays too close to the sea surface while pointing upward or too close to the seabed while pointing downward. The only thing left that can be done is correcting the boundary conditions before planning a trajectory, that is, moving the boundary points into the sea or adjusting the orientation angles so that the AUV points away from the sea surface or the seabed.

Theorem 3.3: Under Assumption 2, the collision avoidance condition is always solvable, that is, a collision-free trajectory always exists.

Proof: Note that in (12), $(f_1^2/n^2) \geq 0$. If $f_1 \neq 0$, (12) represents all of the points outside a parabola in the (b_4^k, c_4^k) plane. In this case, a solution to (b_4^k, c_4^k) always exists for any single obstacle. In the presence of multiple obstacles, each obstacle imposes a constraint as (12), the final solution is the intersection of all solutions to every single object. It always yields at least one finite solution.

On the other hand, if $f_1 = 0$, b_4^k is removed from (12), then b_4^k no longer affects the collision avoidance. To understand the condition of $f_1 = 0$ and its implications, consider the simpler case that $\bar{k} = 1$, it follows that

$$\begin{aligned} y(x) &= b_0 + b_1 x + b_2 x^2 + b_3 x^3 + b_4 x^4 \\ &= [1\ x\ x^2\ x^3]\mathbf{B}_2^{-1}\mathbf{Y}_2 + b_4(x^4 - [1\ x\ x^2\ x^3]\mathbf{B}_2^{-1}\mathbf{A}_2) \\ &= [1\ x\ x^2\ x^3]\mathbf{B}_2^{-1}\mathbf{Y}_2 + b_4 f_1 \end{aligned}$$

The equation shows that no matter what b_4 is chosen, a trajectory is degenerated into a fixed cubic polynomial. This is impossible except for the boundary points, which do not change with b_4. Hence $f_1 = 0$ only occurs at the boundary points. Also, it can be derived that $z(t) = [1\ t\ t^2\ t^3]\mathbf{B}_3^{-1}\mathbf{Y}_3 + c_4 f_3$. At the boundary points, $z(t_0)$ or $z(t_f)$ does not change with c_4, hence f_3 has to be 0. Then in the case of $f_1 = 0$ (i.e. at boundary points), there are only constant terms in (12). Under Assumption 2, the inequality must hold at the boundary points since there is no collision. Therefore combined with the discussion for the case $f_1 \neq 0$, we know that collision avoidance condition (12) is always solvable.

Remark 3.1: If multiple obstacles are detected simultaneously, every obstacle imposes its own version of constraint (12) on the choice of (b_4^k, c_4^k). Then if the optimal solution (b_4^{k*}, c_4^{k*}) locates inside any parabola area, the PI contour needs to be expanded to find suboptimal (b_4^k, c_4^k), and Theorem 3.3 guarantees that at least one finite (b_4^k, c_4^k) can be found to satisfy all inequalities (12) imposed by obstacles.

In summary, the point denoted by '*' in Fig. 4 represents an ideal solution. It is optimal, collision free, and stays within the sea all the time. While '+' or 'o' represents a suboptimal solution. It avoids the obstacle, stays within the sea, but the PI is enlarged, that is, its trajectory length is longer.

4 Simulation results

This section presents the simulation results for the proposed approach. The simulation is done for two scenarios, one has a single obstacle while the other has multiple obstacles.

4.1 Single obstacle

A single-obstacle scenario is illustrated in Fig. 5. Settings of the single obstacle scenario are listed in Table 1. The simulation results are presented in Figs. 5–8.

The obstacle settings are

$$x_p = 50, \quad y_p = 50, \quad z_p = 36, \quad m = 4, \quad n = 2$$

In Fig. 5, an AUV moved from initial position A to final position C. The initial trajectory was composed of $\widehat{AB}$ and $\widehat{BC}$ (thin line). Since the initial trajectory was planned without the knowledge of obstacles, it passed through the obstacle. When the AUV reached B at the 11th second, the obstacle was detected, and by checking the collision avoidance condition, the AUV knew there would be a collision. Hence

© The Institution of Engineering and Technology 2009
doi: 10.1049/iet-cta.2008.0241

Authorized licensed use limited to: University of Central Florida. Downloaded on January 5, 2010 at 09:33 from IEEE Xplore. Restrictions apply.

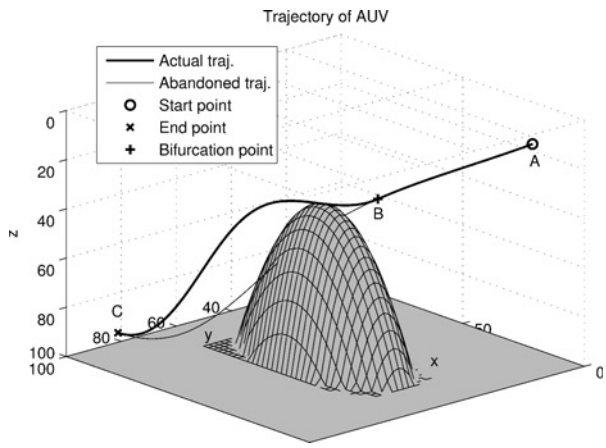

Figure 5 *Optimal collision free trajectory*

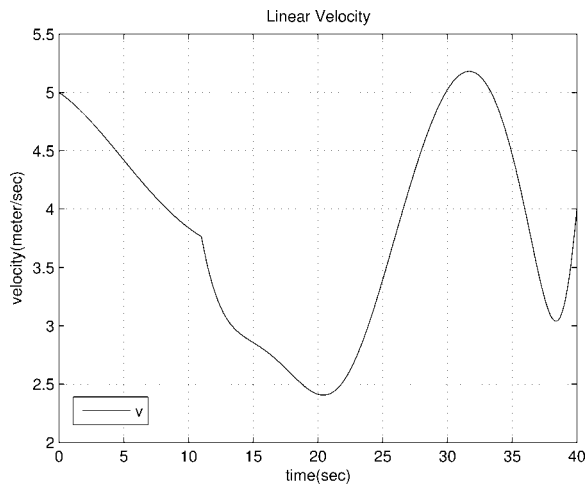

Figure 6 *Linear velocity*

Table 1 Settings of single-obstacle scenario

operation time, s	40
sampling period, s	1
sensing range, m	20
scenario scale, m	100 × 100 × 100
initial position (x_0, y_0, z_0)	(10, 10, 10)
initial attitude (ϕ_0, θ_0, ψ_0)	($\pi/6, \pi/6, \pi/4$)
initial velocity, m/s	5
final position (x_f, y_f, z_f)	(90, 90, 90)
final attitude (ϕ_f, θ_f, ψ_f)	(0, $-\pi/6$, $\pi/3$)
final velocity, m/s	4

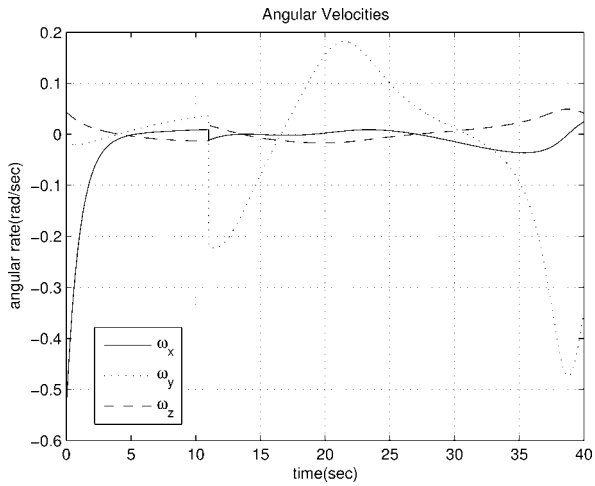

Figure 7 *Angular velocities*

the new trajectory $\widehat{BC}$ (thick line) was replanned. The outcome of the proposed algorithm is

$$\begin{cases} b_4^{0*} = 3.217 \times 10^{-6} \\ c_4^{0*} = -1.0616 \times 10^{-4} \end{cases}, \quad \begin{cases} b_4^{11'} = 9.4517 \times 10^{-6} \\ c_4^{11'} = -7.5544 \times 10^{-4} \end{cases}$$

for the initial and replanned trajectories, respectively.

Remark 4.1: Although the sampling period is 1 s, it does not mean the trajectory has to be replanned every second. The trajectory needs to be updated only when new obstacles are detected, and by checking the collision avoidance condition (12) imposed by each obstacle, a collision will happen if the AUV keeps the current trajectory.

Figs. 6–8 illustrate the state variables and inputs during the motion. The AUV successfully moved from its starting position to the ending position. The controls are piecewise continuous. The discontinuity comes from $\ddot{x}$, $\ddot{y}$ and $\ddot{z}$ in (8), as the kinematic model only ensures the continuity of the first order derivatives at the point when a trajectory is changed. As a result, the orientation angles are continuous but not differentiable at the moment when the trajectory is switched. The linear velocity is continuous in all time domains since it only relates to $\dot{x}$, $\dot{y}$ and $\dot{z}$. When backstepping technique is applied to find an exponential tracking control for the reference trajectory, it is anticipated that the torque level control is also a switching control.

Remark 4.2: The discontinuity can be avoided by increasing the order of polynomial parameterisation. One way is to add an integrator to each of ω_x, ω_y and ω_z so that: $\dot{\omega}_x = u_x$, $\dot{\omega}_y = u_y$, $\dot{\omega}_z = u_z$. This would effectively let ω_x, ω_y and ω_z to be part of the states. Accordingly, $\omega_x(t_0)$, $\omega_y(t_0)$, $\omega_z(t_0)$ need to be supplied as additional boundary conditions and the order of parameterisation needs to be increased by one to fit the new boundary conditions. The other way is to add boundary constraints $\ddot{x}(t_0)$, $\ddot{y}(t_0)$, $\ddot{z}(t_0)$. This would require the additional boundary condition $\dot{v}(t_0)$, $\dot{\theta}(t_0)$, $\dot{\psi}(t_0)$, and increase the order of each polynomial by

© The Institution of Engineering and Technology 2009

Authorized licensed use limited to: University of Central Florida. Downloaded on January 5, 2010 at 09:33 from IEEE Xplore. Restrictions apply.

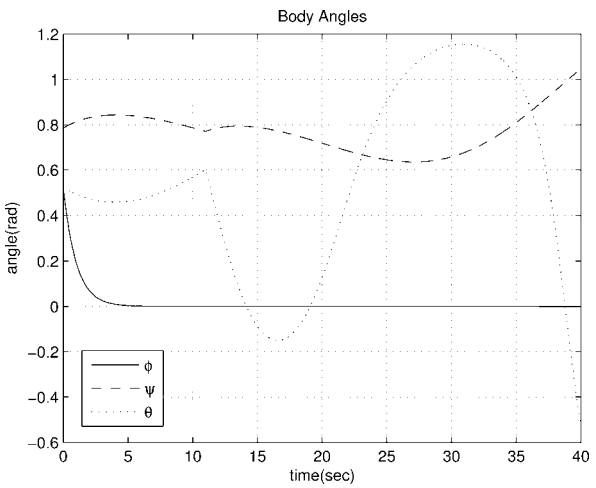

Figure 8 *Orientation angles*

one. In this way, $\ddot{x}, \ddot{y}, \ddot{z}$ would be continuous when a trajectory switches, which renders ω_x, ω_y, ω_z continuous.

4.2 Multiple obstacles

A multiple-obstacle scenario is shown in Fig. 9, scenario settings are listed in Table 2. The obstacles' information is listed in Table 3.

The proposed method yields the trajectory illustrated in Fig. 9. The AUV moved from initial position A to final position D. The trajectory was composed of three segments: $\widehat{AB}$, $\widehat{BC}$ and $\widehat{CD}$ with thick lines. The AUV initially knew obstacle 1 was present and planned the first trajectory $\widehat{AB}$ and $\widehat{BD}$ (thin line). When it arrived at B at the 12th second, obstacle 2 was detected. By checking the collision avoidance condition (12), the AUV knew there was going to be a collision, so it replanned the second trajectory $\widehat{BC}$ plus $\widehat{CD}$ (thin line) and switched to the new trajectory. When the AUV reached point C at the 25th second, it detected obstacle 3. Also, it decided that a collision would happen, so it switched to $\widehat{CD}$ (thick line).

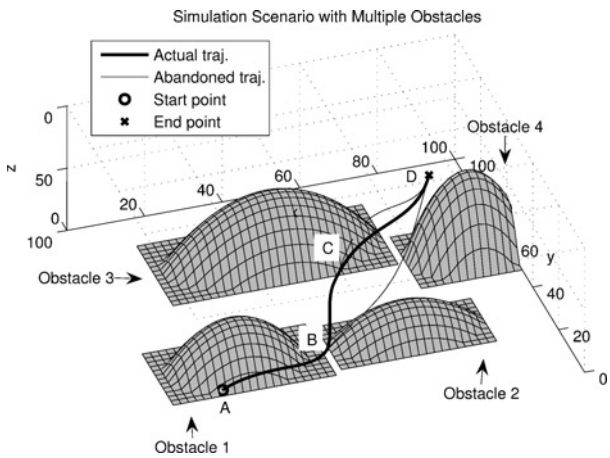

Figure 9 *Trajectory avoids multiple obstacles*

Table 2 Settings of multi-obstacle scenario

operation time, s	40
sampling period, s	1
sensing range, m	10
scenario scale, m	100 × 100 × 100
initial position, (x_0, y_0, z_0)	(10, 10, 80)
initial attitude, (ϕ_0, θ_0, ψ_0)	($\pi/6, \pi/6, \pi/4$)
initial velocity, m/s	5
final position (x_f, y_f, z_f)	(90, 90, 90)
final attitude, (ϕ_f, θ_f, ψ_f)	(0, $-\pi/6$, $\pi/3$)
final velocity, m/s	4

Table 3 Settings of the obstacles

Obstacle	x_p	y_p	z_p	m	n
1	20	30	64	3	2
2	64	30	75	4	2
3	44	74	51	4	2
4	90	60	36	2	1.5

When obstacle 4 was detected, it decided that there was no threat, so no action was taken. The three trajectories yielded by the proposed approach are

$$\begin{cases} b_4^{0'} = -5.8844 \times 10^{-6} \\ c_4^{0'} = -1.5321 \times 10^{-4} \end{cases}, \quad \begin{cases} b_4^{12'} = 2.423 \times 10^{-5} \\ c_4^{12'} = -0.0019 \end{cases},$$

$$\begin{cases} b_4^{25'} = 3.1149 \times 10^{-5} \\ c_4^{25'} = -1.9185 \times 10^{-4} \end{cases}$$

5 Conclusion

In this paper, an optimal real-time motion planning approach is proposed for AUVs operating in an unknown 3D underwater space. The 3D planning problem is reduced to a 2D problem. The vehicle's kinematic model was explicitly taken into consideration and based on a piecewise-constant polynomial parameterisation of all feasible trajectories, the proposed approach prevents any collision by checking the collision avoidance criterion and yields closed-form solutions with optimal performance. By utilising the obtained reference controls, in our future work, we would like to study the design of torque-level controls based on an AUV dynamic model to solve the tracking problem of the obtained collision-free trajectory, while considering some

© The Institution of Engineering and Technology 2009
IET Control Theory Appl., 2009, Vol. 3, Iss. 6, pp. 712–721
doi: 10.1049/iet-cta.2008.0241

Authorized licensed use limited to: University of Central Florida. Downloaded on January 5, 2010 at 09:33 from IEEE Xplore. Restrictions apply.

form of uncertainty such as variations in system parameters, neglected dynamics, or sensor noise, and so on.

6 References

[1] NAKAMURA Y., SAVANT S.: 'Nonlinear tracking control of autonomous underwater vehicles'. Proc. IEEE International Conference on Robotics and Automation, Nice, France, 1992, pp. A4–A9

[2] ARINAGA S., NAKAJIMA S., OKABE H., ONO A., KANAYAMA Y.: 'A motion planning method for an AUV'. Proc. Symposium on AUV Technology, Monterey, CA, USA, June 1996, pp. 477–484

[3] ZHANG Q.: 'A hierarchical global path planning approach for AUV based on genetic algorithm'. Proc. IEEE International Conference on Mechatronics and Automation, Luoyang, China, June 2006, pp. 1745–1750

[4] DING F., JIAO P., BIAN X., WANG H.: 'AUV local path planning based on virtual potential field'. Proc. IEEE International Conference on Mechatronics and Automation, Niagara Falls, Canada, July 2006, pp. 1711–1716

[5] BARISIC M., VUKIC Z., MISKOVIC N.: 'Kinematic simulative analysis of virtual potential field method for AUV trajectory planning'. Proc. Mediterranean Conference on Control & Automation, Athens, Greece, July 2007, pp. 1–6

[6] VALENCIAGA F., PULESTON P., CALVO O., ACOSTA G.: 'Trajectory tracking of the cormoran AUV based on a PI-MIMO approach' (Oceans'07, Aberdeen Scotland, June 2007), pp. 1–6

[7] REPOULILAS F., PAPADOPOULOS E.: 'Three dimensional trajectory control of underactuated AUVs'. Proc. of the European Control Conference 2007, Kos, Greece, July 2007, pp. 3492–3499

[8] KHATIB O.: 'Real-time obstacle avoidance for manipulators and mobile robots', *Int. J. Robot. Res.*, 1986, **5**, (1), pp. 90–98

[9] WARREN C.: 'A technique for autonomous underwater vehicle route planning', *IEEE Trans. Ocean. Eng.*, 1990, **15**, (3), pp. 199–204

[10] HWANG Y., AHUJA N.: 'A potential field approach to path planning', *IEEE Trans. Robot. Autom.*, 1992, **8**, (1), pp. 23–32

[11] KYRIAKOPOULOS K., KAKAMBOURAS P., KRIKELIS N.: 'Potential fields for nonholonomic vehicles'. Proc. IEEE International Symposium on Intelligent Control, Monterey, CA, August 1995, pp. 461–465

[12] WANG Y., LANE D.: 'Subsea vehicle path planning using nonlinear programming and constructive solid geometry', *IEE Proc. Control Theory Appl.*, 1997, **144**, (2), pp. 143–152

[13] CHUANG J.: 'Potential-based modeling of three-dimensional workspace for obstacle avoidance', *IEEE Trans. Robot. Autom.*, 1998, **14**, (5), pp. 778–785

[14] BREIVIK M., FOSSEN T.: 'Principles of guidance-based path following in 2D and 3D'. Proc. 44th IEEE International Conference on Decision and Control, and the European Control Conference, Seville, Spain, December 2005, pp. 627–634

[15] JUDD B., MCLAIN W.: 'Spline based path planning for unmanned air vehicles'. AIAA Guidance, Navigation, and Control Conference and Exhibit, Montreal, Canada, August 2001, AIAA-2001–4238

[16] QU Z., WANG J., PLAISTED C.: 'A new analytical solution to mobile robot trajectory generation in the presence of moving obstacles', *IEEE Trans. Robot.*, 2004, **20**, (6), pp. 978–993

[17] YANG J., DAOUI A., QU Z., WANG J.: 'An optimal and real-time solution to parameterised mobile robot trajectories'. Proc. IEEE International Conference on Robotics and Automation, Barcelona, Spain, April 2005, pp. 4412–4417

[18] FUJIMURA K.: 'A hierarchical strategy for path planning among moving obstacles', *IEEE Trans. Robot. Autom.*, 1989, **5**, (1), pp. 61–69

[19] HERMAN M.: 'Fast, three-dimensional, collision-free motion planning'. Proc. IEEE International Conference on Robotics and Automation, San Francisco, CA, April 1986, pp. 1056–1063

[20] CHUNG C., SARIDIS G.: 'Path planning for an intelligent robot by the extended vgraph algorithm'. Proc. IEEE international Symposium on Intelligent Control, Albany, NY, September 1989, pp. 544–549

[21] BORTOFF S.: 'Path planning for UAVs'. Proc. 2000 American Control Conference, Chicago, IL, June 2000, pp. 364–368

[22] KITAMURA Y., TANAKA T., KISHINO F., YACHIDA M.: '3-D path planning in a dynamic environment using an octree and an artificial potential field'. IEEE International Conference on Intelligent Robots and Systems, Pittsburgh, USA, August 1995, pp. 474–481

doi: 10.1049/iet-cta.2008.0241
© The Institution of Engineering and Technology 2009

Authorized licensed use limited to: University of Central Florida. Downloaded on January 5, 2010 at 09:33 from IEEE Xplore. Restrictions apply.